RF COAXIAL CONNECTORS, TYPE SMA 2.9,

50 OHMS (MALE CONTACT)

ESCC Detail Specification No. 3402/021

Issue 4	February 2016

Document Custodian: European Space Agency – see https://escies.org

LEGAL DISCLAIMER AND COPYRIGHT

European Space Agency, Copyright © 2016. All rights reserved.

The European Space Agency disclaims any liability or responsibility, to any person or entity, with respect to any loss or damage caused, or alleged to be caused, directly or indirectly by the use and application of this ESCC publication.

This publication, without the prior permission of the European Space Agency and provided that it is not used for a commercial purpose, may be:

– copied in whole, in any medium, without alteration or modification.
– copied in part, in any medium, provided that the ESCC document identification, comprising the ESCC symbol, document number and document issue, is removed.

DOCUMENTATION CHANGE NOTICE

(Refer to https://escies.org for ESCC DCR content)

DCR No.	CHANGE DESCRIPTION
959	Specification upissued to incorporate technical changes per DCR.

TABLE OF CONTENTS

1	GENERAL	6
1.1	SCOPE	6
1.2	TYPE VARIANTS	6
1.3	MAXIMUM RATINGS	6
1.4	PARAMETER DERATING INFORMATION (FIGURE 1)	6
1.5	PHYSICAL DIMENSIONS	6
1.6	STANDARD TEST CONNECTOR INTERFACE	6
2	APPLICABLE DOCUMENTS	11
3	TERMS, DEFINITIONS, ABBREVIATIONS, SYMBOLS AND UNITS	11
4	REQUIREMENTS	11
4.1	GENERAL	11
4.2	DEVIATIONS FROM GENERIC SPECIFICATION	11
4.2.1	Deviations from Special In-process Controls	11
4.2.2	Deviations from Final Production Tests (Chart II)	11
4.2.3	Deviations from Burn-in and Electrical Measurements (Chart III)	11
4.2.4	Deviations from Qualification Tests (Chart IV)	11
4.2.5	Deviations from Lot Acceptance Tests (Chart V)	11
4.3	MECHANICAL REQUIREMENTS	12
4.3.1	Dimension Check	12
4.3.2	Weight	12
4.3.3	Coupling Proof Torque	12
4.3.4	Cable Retention Force	12
4.3.4.1	FLEXIBLE CABLES	12
4.3.4.2	SEMI-RIGID CABLES	12
4.3.5	Mating and Unmating Forces	12
4.3.6	Endurance	12
4.3.7	Residual magnetism	12
4.3.8	Contact Engagement and Separation Forces	13
4.3.9	Contact Retention	13
4.4	MATERIALS AND FINISHES	13
4.4.1	Passivated Amagnetic Stainless Steel Connectors	14
4.5	MARKING	14
4.5.1	General	14
4.5.2	The ESCC Component Number	14
4.5.3	Characteristics	15
4.5.3.1	TYPE OF PLATING/MATERIAL	15

4.5.4 Traceability Information 15
4.5.5 Marking of Small Components 15
4.6 ELECTRICAL MEASUREMENTS 15
4.6.1 Electrical Measurements at Room Temperature 15
4.6.2 Electrical Measurements at High and Low Temperatures (Table 3) 15
4.6.3 Circuits for Electrical Measurements (Figure 4) 15
4.7 BURN-IN TESTS (TABLES 4 AND 5) 15
4.8 ENVIRONMENTAL AND ENDURANCE TESTS (CHARTS IV AND V OF ESCC GENERIC SPECIFICATION NO. 3402) 16
4.8.1 Measurements and Inspections on Completion of Environmental Tests 16
4.8.2 Measurements and Inspections at Intermediate Points during Endurance Tests 16
4.8.3 Measurements and Inspections on Completion of Endurance Tests 16
4.8.4 Conditions for Operating Life Test (Part of Endurance Testing) 16
4.8.5 Electrical Circuit for Operating Life Test 16
4.8.6 Conditions for High Temperature Storage Test (Part of Endurance Testing) 16

1 GENERAL

1.1 SCOPE

This specification details the ratings, physical and electrical characteristics, test and inspection data for RF Coaxial Connectors, Type SMA 2.9, 50 Ohms (Male Contact). It shall be read in conjunction with ESCC Generic Specification No. 3402, the requirements of which are supplemented herein.

1.2 TYPE VARIANTS

A list of the type variants of the connectors specified herein, which are also covered by this specification, is given in Table 1(a).

For each type variant, the full electrical and physical characteristics are given in individual Figures 2(b) at the end of this specification.

1.3 MAXIMUM RATINGS

The maximum ratings, which shall not be exceeded at any time during use or storage, applicable to the connectors specified herein, are scheduled in Table 1(b).

1.4 PARAMETER DERATING INFORMATION (FIGURE 1)

The derating information applicable to the connectors specified herein is shown in Figure 1.

1.5 PHYSICAL DIMENSIONS

The physical dimensions of the connectors specified herein are shown in Figures 2(a) and 2(b).

1.6 STANDARD TEST CONNECTOR INTERFACE

Whenever gauges are required for mating with the connectors under test, their physical dimensions shall be in accordance with those specified in Figure 3.

TABLE 1(a) – TYPE VARIANTS

Variant	Description (1)
01	Straight Plug, Solder Type, for Microporous Semi-Rigid Cable Ø2.20mm (0.085”)
02	Straight Plug, Solder Type, for Microporous Semi-Rigid Cable Ø3.58mm (0.141”)
03	Straight Plug, Solder Type, for SHF 3MS Cable
04	Straight Plug, Solder Type, for SHF 4.2MS Cable
05	Straight Plug, Solder Type, for SHF 5MS Cable
07	Square Flange Plug Receptacle for 0.3mm dia. Pin

NOTES:

1. Each variant is detailed in Figure 2(b).

TABLE 1(b) – MAXIMUM RATINGS

No.	Characteristics	Symbol	Maximum Ratings	Unit	Remarks
1	Power	P	See Figures 1(a) and 1(b)	W	For information
2	Nominal Impedance	Z	50	Ω	-
3	Frequency Range	f	See Figure 2(b)	GHz	-
4	Dielectric Withstanding Voltage at ambient pressure	V_{dw}	See Figure 2(b)	Vrms	Voltage Proof test. At sea level
5	Dielectric Withstanding Voltage at low pressure	V_{lp}	10% of V_{dw}	Vrms	At 44mb
6	Rated Operating Voltage	V_{op}	50% of V_{dw}	Vrms	-
7	Corona Level	V_{co}	8.5% of V_{dw}	Vrms	-
8	Operating Temperature Range	T_{op}	See Figure 2(b)	°C	-
9	Storage Temperature Range	T_{stg}	As per Operating Temperature Range	°C	-

FIGURE 1 – PARAMETER DERATING INFORMATION

FIGURE 1(a) – POWER VERSUS FREQUENCY

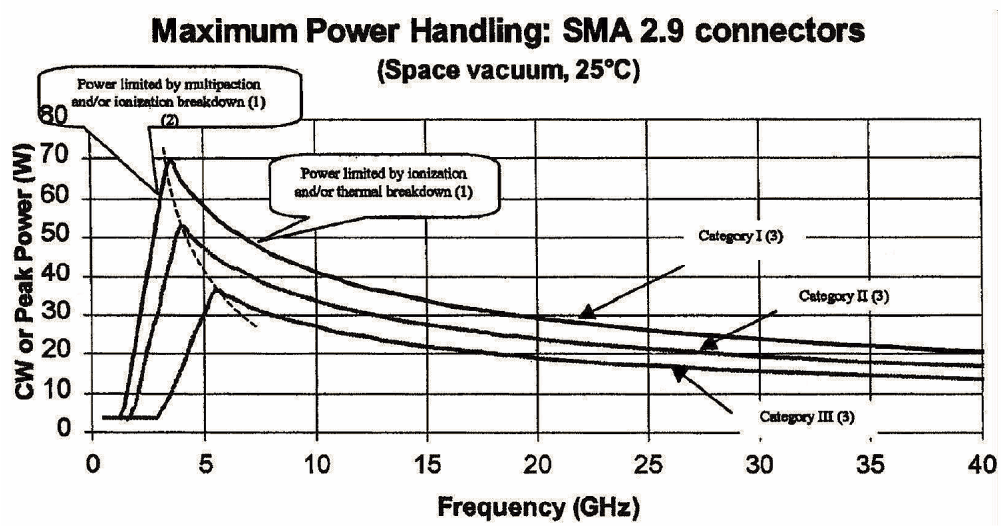

NOTES:

1. Load VSWR is better than 1.30:1.
2. The part of the curve limited by multipaction takes into account a 6dB margin.
3. See Figure 2(b) for applicability of power handling categories to the different variants.

FIGURE 1(b) – POWER VERSUS OPERATING TEMPERATURE

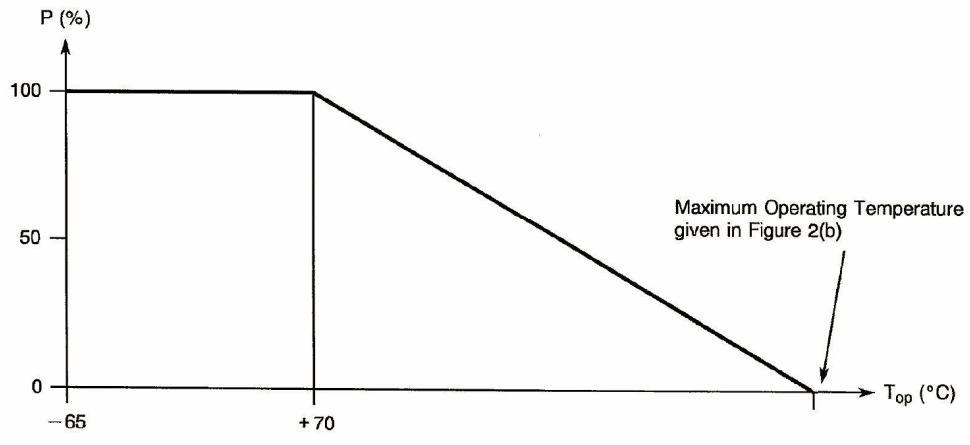

FIGURE 2 - PHYSICAL DIMENSIONS

FIGURE 2(a) – CONNECTOR INTERFACE - MALE CONTACT

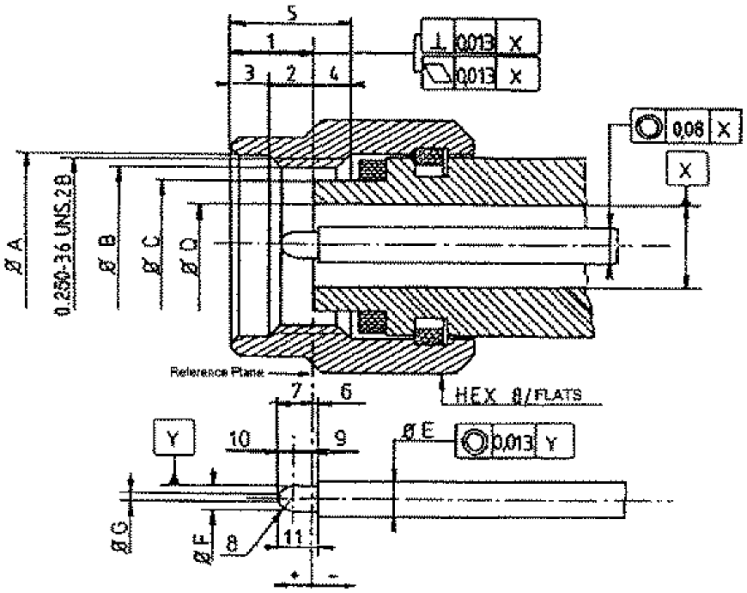

Symbol	Millimetres		Notes
	Min.	Max.	
1	2.63	3.25	
2	1.58	2.2	
3	0.75	1.15	
4	0.85	1.47	
5	3.8	4.2	
6	0	0.08	
7	1.42	1.6	
8	0.8	0.9	Radius
9	0.693	0.984	
10	0.616	0.727	
11	1.5	1.6	
ØA	6.6	6.7	
ØB	5.59	-	
ØC	4.55	4.58	
ØD	2.905	2.94	
ØE	1.26	1.28	
ØF	0.92	0.94	
ØG	0.2	0.34	

FIGURE 3 – STANDARD TEST CONNECTOR INTERFACE - FEMALE CONTACT

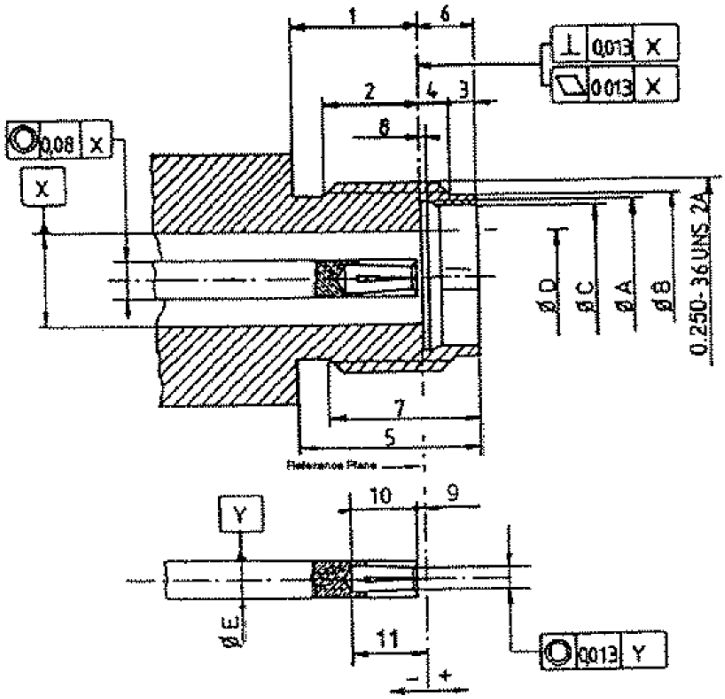

Symbol	Millimetres		Notes
	Min.	Max.	
1	3.82	4.32	
2	2.87	3.27	
3	0.65	0.95	
4	0.93	1.33	
5	5.8	6.2	
6	1.88	1.98	
7	4.85	5.15	
8	0.3	0.5	
9	0	0.08	
10	2.8	3.2	
11	2.8	3.28	
ØA	4.8	5	
ØB	5.3	5.35	
ØC	4.6	4.63	
ØD	2.905	2.945	
ØE	1.26	1.28	

2 APPLICABLE DOCUMENTS

The following documents form part of this specification and shall be read in conjunction with it:

(a) ESCC Generic Specification No. 3402 for RF Coaxial Connectors.
(b) MIL-DTL-45204, Gold Plating, Electrodeposited.

3 TERMS, DEFINITIONS, ABBREVIATIONS, SYMBOLS AND UNITS

For the purpose of this specification, the terms, definitions, abbreviations, symbols and units specified in ESCC Basic Specification No. 21300 shall apply.

In addition the following shall apply:

V_{dw}	Dielectric Withstanding Voltage at ambient pressure (sea level)
V_{lp}	Dielectric Withstanding Voltage at low pressure (44mb)
V_{co}	Corona Level Voltage
R_i	Insulation Resistance
I_L	Leakage Current

4 REQUIREMENTS

4.1 GENERAL

The complete requirements for procurement of the connectors specified herein are stated in this specification and ESCC Generic Specification No. 3402. Deviations from the Generic Specification, applicable to this specification only, are detailed in Para. 4.2.

Deviations from the applicable Generic Specification and this Detail Specification, formally agreed with specific Manufacturers on the basis that the alternative requirements are equivalent to the ESCC requirements and do not affect the components' reliability, are listed in the appendices attached to this specification.

4.2 DEVIATIONS FROM GENERIC SPECIFICATION

4.2.1 Deviations from Special In-process Controls

None.

4.2.2 Deviations from Final Production Tests (Chart II)

None.

4.2.3 Deviations from Burn-in and Electrical Measurements (Chart III)

Not applicable.

4.2.4 Deviations from Qualification Tests (Chart IV)

None.

4.2.5 Deviations from Lot Acceptance Tests (Chart V)

None.

4.3 MECHANICAL REQUIREMENTS

4.3.1 Dimension Check

The dimensions of the connectors specified herein shall be verified in accordance with the requirements set out in Para. 9.25 of ESCC Generic Specification No. 3402 and they shall conform to those shown in Figures 2(a) and 2(b) of this specification.

4.3.2 Weight

The maximum weight of the connectors specified herein shall be as specified in Figure 2(b).

4.3.3 Coupling Proof Torque

The requirements for testing of the coupling proof torque are specified in Section 9 of ESCC Generic Specification No. 3402. The applied torque shall be 170N.cm.

4.3.4 Cable Retention Force

The requirements for testing of the cable retention force are specified in Section 9 of ESCC Generic Specification No. 3402. Figure 2(b) specifies the values for axial loads. Torque shall be applied as follows:

4.3.4.1 Flexible Cables

Flexible cables shall be rotated 180° in both directions.
Rotational movement shall be applied at 15cm from the connector.

4.3.4.2 Semi-rigid Cables

The torque value shall be as follows:

11.28N.cm	2.2mm (.085”) semi-rigid cable.
38.85N.cm	3.58mm (.141”) semi-rigid cable.

4.3.5 Mating and Unmating Forces

The applicable measurement requirements are specified in Section 9 of ESCC Generic Specification No. 3402. The maximum torque during mating and unmating shall not exceed 23N.cm.

Whenever a test is performed on mated pairs of connectors, the pairs shall be torqued at 80-115N.cm.

4.3.6 Endurance

The applicable test requirements are specified in Section 9 of ESCC Generic Specification No. 3402. The test conditions shall be as follows:

(a) Number of cycles: 500 for qualification; 100 for lot acceptance.
(b) Rate: 12 cycles maximum/minute.

4.3.7 Residual magnetism

The applicable measurement requirements are specified in Section 9 of ESCC Generic Specification No. 3402. Residual magnetism is not applicable to stainless steel connectors.

4.3.8 Contact Engagement and Separation Forces

The requirements for these measurements are specified in Section 9 of ESCC Generic Specification No. 3402 and apply to female contacts only.

(a) Oversize Pin
Steel test pin diameter: 0.95/0.955 mm.
Insertion depth: 0.76/1.14 mm.
Number of insertions: 3.

(b) Engagement Force Test (Maximum Diameter Test Pin)
Steel test pin diameter: 0.94/0.946 mm.
Engagement depth: 1.27/1.9 mm.
Engagement force: 1380g max.

(c) Separation Force Test (Minimum Diameter Test Pin)
Steel test pin diameter: 0.89/0.902 mm.
Separation depth: 1.27/1.9 mm.
Separation force: 28g min.

FIGURE 4 – TEST PIN CONFIGURATION

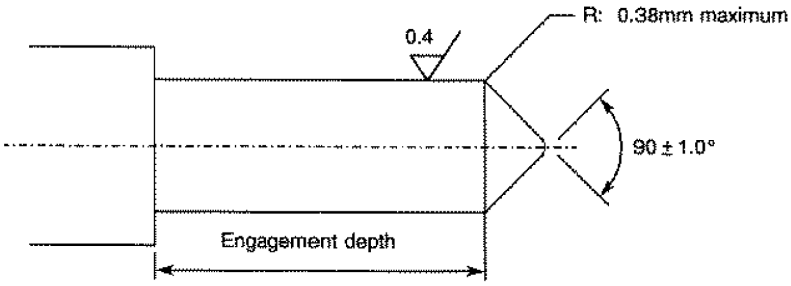

4.3.9 Contact Retention

The requirements for this test are specified in Section 9 of ESCC Generic Specification No. 3402. The test conditions are given in Figure 2(b). After testing, the connector interface dimensions shall be within the limits of Figure 2(a).

4.4 MATERIALS AND FINISHES

The materials and finishes shall be as specified herein. Where a definite material is not specified, a material which will enable the connectors specified herein to meet the performance requirements of this specification shall be used. Acceptance or approval of any constituent material does not guarantee acceptance of the finished product.

4.4.1 Passivated Amagnetic Stainless Steel Connectors

(a) Shell, Coupling Nut
Material : Amagnetic stainless steel, electro-passivated.

(b) Centre Contact
Material : Beryllium copper.
Underplate : Nickel, 2µm minimum.
Plating : Gold, 1.3µm minimum, Type II of MIL-DTL-45204.

(c) Inserts
Material : ULTEM 1000.

(d) Gaskets
Material : Silicone rubber.

(e) Accessories

– Crimping or soldering elements
Material : Brass or beryllium copper.
Underplate : Copper, 0.5µm minimum.
Plating : Silver, 5µm minimum.

– Insert ring
Material : Brass.
Underplate : Nickel, 2µm minimum.
Plating : Gold, 1.3µm minimum.

– Washers
Material : Beryllium copper.
Plating : Nickel, 2µm minimum.

4.5 MARKING

4.5.1 General

The marking of all components delivered to this specification shall be in accordance with the requirements of ESCC Basic Specification No. 21700 and the following paragraphs. Each component shall be marked in respect of:

(a) The ESCC Component Number.
(b) Characteristics.
(c) Traceability Information.

4.5.2 The ESCC Component Number

Each component shall bear the ESCC Component Number, which shall be constituted and marked as follows:

Example: 340202101B

– Detail Specification Number: 3402021
– Type Variant (See Table 1(a)): 01
– Testing Level: B

4.5.3 Characteristics

The characteristics cover the type of plating/material. Each component shall be marked in respect of:

(a) Type of plating/material (shell).
(b) Number.

The information shall be constituted as follows:

Example: 301

– Type of plating/material (See Para. 4.5.3.1): 3
– Number (shall always be 01)

4.5.3.1 Type of Plating/Material

The type of plating/material shall be identified by means of the following code:

Code	Type of Plating/Material	Para.
3	Passivated amagnetic stainless steel	4.4.1

NOTES:

1. Codes 1, 2 and 4 are not used.

4.5.4 Traceability Information

Each component shall be marked in respect of traceability information in accordance with the requirements of ESCC Basic Specification No. 21700.

4.5.5 Marking of Small Components

When it is considered that the component is too small to accommodate the marking as specified above, as much as space permits shall be marked. The order of precedence shall be as specified in Para. 4.5.1. The marking information in full shall accompany each component in its primary package.

4.6 ELECTRICAL MEASUREMENTS

4.6.1 Electrical Measurements at Room Temperature

The parameters to be measured in respect of electrical characteristics are scheduled in Table 2. Unless otherwise specified these measurements shall be performed at T_{amb} = +22 ±3°C.

4.6.2 Electrical Measurements at High and Low Temperatures (Table 3)

Not applicable.

4.6.3 Circuits for Electrical Measurements (Figure 4)

Not applicable.

4.7 BURN-IN TESTS (TABLES 4 AND 5)

Not applicable.

TABLE 2 – ELECTRICAL MEASUREMENTS AT ROOM TEMPERATURE

No.	Characteristics	Symbol	Spec. and/or Test Method	Test Conditions	Limits		Unit
					Min.	Max.	
1	Insulation Resistance	R_i	ESCC 3402, Para. 9.1	500 Vdc	5000	-	MΩ
2	Leakage Current	I_L	ESCC 3402, Para. 9.2	Per Voltage Proof test voltage in Figure 2(b)	-	2	mA

TABLES 3, 4 AND 5

Not applicable.

4.8 ENVIRONMENTAL AND ENDURANCE TESTS (CHARTS IV AND V OF ESCC GENERIC SPECIFICATION No. 3402)

4.8.1 Measurements and Inspections on Completion of Environmental Tests

The parameters to be measured and inspections to be performed on completion of environmental tests are scheduled in Table 6. Unless otherwise specified, the measurements shall be performed at T_{amb} = +22 ±3°C.

4.8.2 Measurements and Inspections at Intermediate Points during Endurance Tests

Not applicable.

4.8.3 Measurements and Inspections on Completion of Endurance Tests

The parameters to be measured and inspections to be performed on completion of endurance tests are scheduled in Table 6. Unless otherwise specified, the measurements shall be performed at T_{amb} = +22 ±3°C.

4.8.4 Conditions for Operating Life Test (Part of Endurance Testing)

Not applicable.

4.8.5 Electrical Circuit for Operating Life Test

Not applicable.

4.8.6 Conditions for High Temperature Storage Test (Part of Endurance Testing)

The requirements for the high temperature storage test are specified in Section 9 of ESCC Generic Specification No. 3402. The conditions for high temperature storage testing shall be the maximum storage temperature specified in Table 1(b) of this specification.

TABLE 6 – MEASUREMENTS AND INSPECTIONS ON COMPLETION OF ENVIRONMENTAL AND ENDURANCE TESTING

No.	ESCC Generic Spec. No. 3402		Measurements and Inspections		Symbol	Limits		Unit
	Environmental and Endurance Tests (1)	Test Method and Conditions	Identification	Conditions		Min.	Max.	
01	Coupling Proof Torque	Para. 9.4	**Final Measurements**					
			Interface Dimensions	-	-	Figure 2(a)		-
			Visual Examination	Para. 9.4 of ESCC 3402	-	-	-	-
02	Mating / Unmating Forces	Para. 9.5	**During Test**					
			Torque	Para. 4.3.5 of this spec.	-	-	23	N.cm
03	Seal Test	Para. 9.7	Hermeticity	Not applicable	-	-	-	-
			Leakage	As applicable	-	No Bubbles		-
04	External Visual Inspection	Para. 9.8	External Visual Inspection	Para. 9.8 of ESCC 3402	-	-	-	-
05	Contact Resistance	Para. 9.9	**During Test**					
			Contact Resistance	Para. 9.9 of ESCC 3402				
				Centre Contact	-	-	3	mΩ
				Shell	-	-	2	mΩ
06	Vibration	Para. 9.10 Full Engagement	**During Test**	**Last cycle in each direction**				
			Electrical Measurements	No open or short circuits	-	-	-	-
			Final Measurements					
			Visual Examination	No evidence of damage	-	-	-	-
			Contact Resistance	Para. 9.9 of ESCC 3402				
				Centre Contact	-	-	3	mΩ
07	Shock or Bump	Para. 9.11 Full Engagement	**Final Measurements**					
			Interface Dimensions	-	-	Figure 2(a)		-
			Visual Examination	No evidence of damage	-	-	-	-
			Contact Resistance	Para. 9.9 of ESCC 3402				
				Centre Contact	-	-	3	mΩ
08	Rapid Change of Temperature	Para. 9.12	**Final Measurements**	**After a recovery period of 24±2 hrs**				
			Contact Resistance	Para. 9.9 of ESCC 3402				
				Centre Contact	-	-	3	mΩ
			Leakage Current	Table 2 Item 2	I_L	-	2	mA
			Visual Examination	-	-	-	-	-

No.	ESCC Generic Spec. No. 3402		Measurements and Inspections		Symbol	Limits		Unit
	Environmental and Endurance Tests (1)	Test Method and Conditions	Identification	Conditions		Min.	Max.	
09	Climatic Sequence	Para. 9.13	**During Test**					
			Dielectric Withstanding Voltage at low pressure (44mb)	Table 1(b) Item 5	V_{Ip}	No flashover or breakdown		-
			Final Measurements	**After final Damp Heat cycle (within 1 to 24 hrs recovery)**				
			External Visual Inspection	Para. 9.8 of ESCC 3402	-	-	-	-
			Insulation Resistance	Table 2 Item 1	R_i	200	-	MΩ
			Leakage Current	Table 2 Item 2	I_L	-	2	mA
10	Cable Retention Force	Paras. 9.14 and 4.3.4 of this spec.	**During Test**					
			Continuity	-	-	-	-	-
11	Cabling and Crimping Capability	Para. 9.15	Visual Examination	Para. 9.15 of ESCC 3402	-	-	-	-
			Dimensions	Para. 9.15 of ESCC 3402	-	Figs. 2(a) & 2(b)		-
			Insulation Resistance	Table 2 Item 1	R_i	5000	-	MΩ
			Leakage Current	Table 2 Item 2	I_L	-	2	mA
12	VSWR or Reflection Coefficient	Para. 9.16	VSWR	Para. 9.16 of ESCC 3402	-	Figure 2(b)		-
13	Corona Level	Para. 9.17	Corona	Para. 9.17 of ESCC 3402	-	Table 1 Item 7		-
14	Endurance	Paras. 9.18 & 4.3.6 of this spec.	**Final Measurements**					
			Mating/Unmating Forces	Para. 4.3.5 of this spec.	-	-	23	N.cm
			Contact Resistance	Para. 9.9 of ESCC 3402				
				Centre Contact	-	-	4	mΩ
				Shell	-	-	3	mΩ
			Visual Examination	Para. 9.18 of ESCC 3402	-	-	-	-
15	RF Insertion Loss	Para. 9.19	Insertion Loss	Para. 9.19 of ESCC 3402	-	Figure 2(b)		dB
16	Corrosion	Para. 9.20	Visual Examination	Para. 9.20 of ESCC 3402 No exposure of base metal	-	-	-	-
17	Residual Magnetism	Para. 9.21	Magnetism	Not applicable	-	-	-	-

No.	ESCC Generic Spec. No. 3402		Measurements and Inspections		Symbol	Limits		Unit
	Environmental and Endurance Tests (1)	Test Method and Conditions	Identification	Conditions		Min.	Max.	
18	Soldering Proof	Para. 9.22	**Final Measurements**					
			Interface Dimensions	-	-	Figure 2(a)		-
			Mating/Unmating Forces	Para. 4.3.5 of this spec.	-	-	23	N.cm
			Insulation Resistance	Table 2 Item 1	R_i	5000	-	MΩ
			Leakage Current	Table 2 Item 2	I_L	-	2	mA
			Contact Resistance	Para. 9.9 of ESCC 3402				
				Centre Contact	-	-	3	mΩ
				Shell	-	-	2	mΩ
			External Visual Inspection	Para. 9.8 of ESCC 3402	-	-	-	-
19	RF Leakage	Para. 9.23	Leakage	Para. 9.23 of ESCC 3402	-	Figure 2(b)		dB
20	High Temperature Storage	Paras. 9.24 & 4.8.6 of this spec.	**Final Measurements**					
			Mating/Unmating Forces	Para. 4.3.5 of this spec.	-	-	23	N.cm
			Insulation Resistance	Table 2 Item 1	R_i	5000	-	MΩ
			Leakage Current	Table 2 Item 2	I_L	-	2	mA
			Contact Retention	Para. 4.3.9 of this spec.	-	Para. 4.3.9		-
			Visual Examination	-	-	-	-	-
			Contact Resistance	Para. 9.9 of ESCC 3402				
				Centre Contact	-	-	8	mΩ
				Shell	-	-	7.5	mΩ
			External Visual Inspection	Para. 9.8 of ESCC 3402	-	-	-	-
21	Permanence of Marking	Para. 9.27	Marking Permanence	Para. 9.27 of ESCC 3402	-	-	-	-
22	Plating Thickness (Hermetic Types Only)	Para. 9.8	Plating Thickness	Not applicable	-	-	-	-

NOTES

1. The tests in this Table refer to either Chart IV or V and shall be used as applicable.

FIGURE 2(b) – TYPE VARIANTS

VARIANT 01 – STRAIGHT PLUG, SOLDER TYPE, FOR MICROPOROUS SEMI-RIGID CABLE Ø2.20mm (0.085")

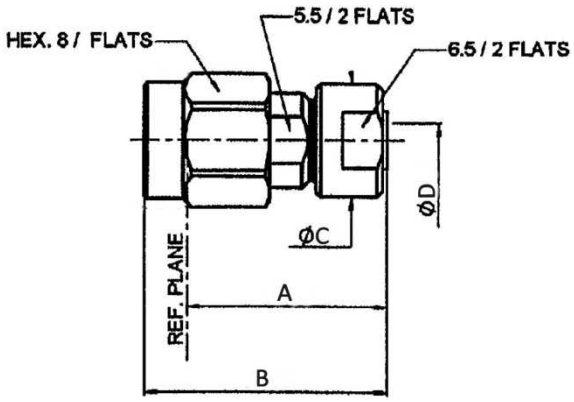

Symbol	Millimetres		Notes
	Min.	Max.	
A	13.43	13.68	
B	16.33	16.58	
ØC	7.4	7.5	
ØD	2.25	2.29	

NOTES:

1. All dimensions are in mm.

Electrical Characteristics	**Values**	**Units**
Frequency Range	0-40	GHz
Maximum VSWR	1.05 + 0.005×f (GHz)	-
Maximum Insertion Loss	0.03×√f (GHz)	dB
RF Leakage	-(90 - f (GHz))	dB
Dielectric Withstanding Voltage (Sea Level) (Voltage Proof Test)	750	Vrms
Power Handling Category (Figure 1(a))	Category III	-
Mechanical Characteristics	**Values**	**Units**
Minimum Centre Contact Retention Force (axial)	27	N
Minimum Centre Contact Retention Torque	Not applicable	N.cm
Minimum Cable Retention Force	200	N
Minimum Cable Retention Torque Value	11.28	N.cm
Maximum Weight	4.5	g
Other Characteristics	**Values**	**Units**
Rapid Change of Temperature - peak value	165	°C
Operating Temperature Range	-65 to +165	°C
Maximum Leakage (panel sealed connectors)	Not applicable	-
Maximum Leakage (hermetically sealed connectors)	Not applicable	-
Solderability	Applicable	-
Soldering Proof	Not applicable	-
Cables Used	Microporous semi-rigid cable Ø2.20mm (0.085"; P/N UT 85-LL)	-

VARIANT 02 – STRAIGHT PLUG, SOLDER TYPE, FOR MICROPOROUS SEMI-RIGID CABLE Ø3.58mm (0.141")

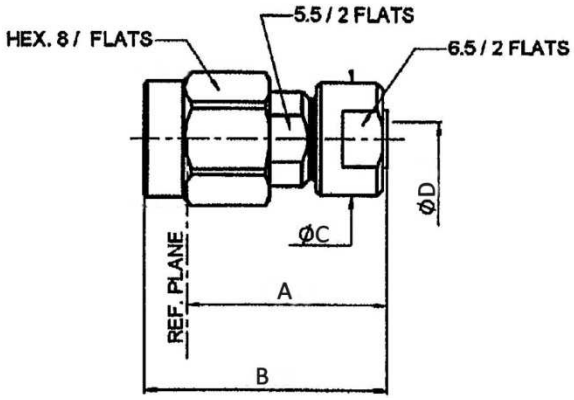

Symbol	Millimetres		Notes
	Min.	Max.	
A	13.43	13.68	
B	16.33	16.58	
ØC	7.4	7.5	
ØD	3.64	3.68	

NOTES:

1. All dimensions are in mm.

Electrical Characteristics	**Values**	**Units**
Frequency Range	0-40	GHz
Maximum VSWR	1.05 + 0.005×f (GHz)*	-
Maximum Insertion Loss	0.03×√f (GHz)*	dB
RF Leakage	-(90 - f (GHz))*	dB
Dielectric Withstanding Voltage (Sea Level) (Voltage Proof Test)	750	Vrms
Power Handling Category (Figure 1(a))	Category I	-
Mechanical Characteristics	**Values**	**Units**
Minimum Centre Contact Retention Force (axial)	27	N
Minimum Centre Contact Retention Torque	Not applicable	N.cm
Minimum Cable Retention Force	270	N
Minimum Cable Retention Torque Value	38.85	N.cm
Maximum Weight	4.3	g
Other Characteristics	**Values**	**Units**
Rapid Change of Temperature - peak value	165	°C
Operating Temperature Range	-65 to +165	°C
Maximum Leakage (panel sealed connectors)	Not applicable	-
Maximum Leakage (hermetically sealed connectors)	Not applicable	-
Solderability	Applicable	-
Soldering Proof	Not applicable	-
Cables Used	Microporous semi-rigid cable Ø3.58mm (0.141"; P/N UT 141-LL)	-

* Limited up to 36 GHz by cable.

VARIANT 03 – STRAIGHT PLUG, SOLDER TYPE, FOR SHF 3MS CABLE

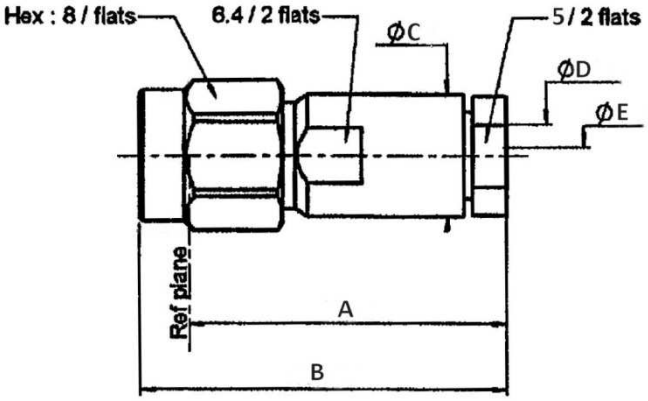

Symbol	Millimetres		Notes
	Min.	Max.	
A	19.47	19.82	
B	22.37	22.92	
ØC	7.1	7.3	
ØD	3.3	3.35	
ØE	0.85	0.9	

NOTES:

1. All dimensions are in mm.

Electrical Characteristics	**Values**	**Units**
Frequency Range	0-40	GHz
Maximum VSWR	1.05 + 0.005×f (GHz)	-
Maximum Insertion Loss	0.03×√f (GHz)	dB
RF Leakage	-(90 - f (GHz))	dB
Dielectric Withstanding Voltage (Sea Level) (Voltage Proof Test)	750	Vrms
Power Handling Category (Figure 1(a))	Category II	-
Mechanical Characteristics	**Values**	**Units**
Minimum Centre Contact Retention Force (axial)	27	N
Minimum Centre Contact Retention Torque	Not applicable	N.cm
Minimum Cable Retention Force	50	N
Minimum Cable Retention Torque Value	Not applicable	N.cm
Maximum Weight	6	g
Other Characteristics	**Values**	**Units**
Rapid Change of Temperature - peak value	165	°C
Operating Temperature Range	-65 to +165	°C
Maximum Leakage (panel sealed connectors)	Not applicable	-
Maximum Leakage (hermetically sealed connectors)	Not applicable	-
Solderability	Applicable	-
Soldering Proof	Not applicable	-
Cables Used	SHF 3MS	-

VARIANT 04 – STRAIGHT PLUG, SOLDER TYPE, FOR SHF 4.2MS CABLE

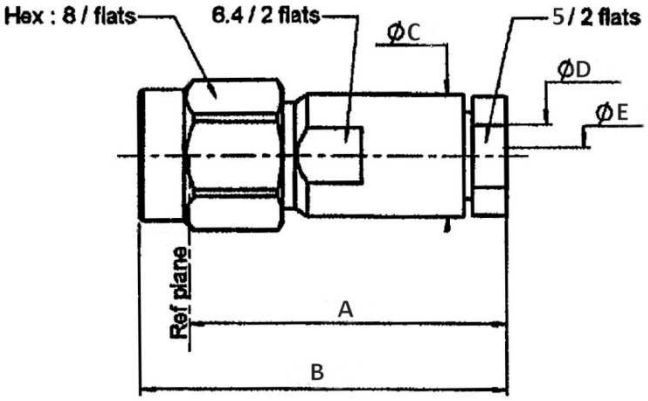

Symbol	Millimetres		Notes
	Min.	Max.	
A	20.27	20.62	
B	23.17	23.52	
ØC	7.1	7.3	
ØD	3.75	3.85	
ØE	1.5	1.1	

NOTES:

1. All dimensions are in mm.

Electrical Characteristics	**Values**	**Units**
Frequency Range	0-40	GHz
Maximum VSWR	1.05 + 0.005×f (GHz)	-
Maximum Insertion Loss	0.03×√f (GHz)	dB
RF Leakage	-(90 - f (GHz))	dB
Dielectric Withstanding Voltage (Sea Level) (Voltage Proof Test)	750	Vrms
Power Handling Category (Figure 1(a))	Category I	-
Mechanical Characteristics	**Values**	**Units**
Minimum Centre Contact Retention Force (axial)	27	N
Minimum Centre Contact Retention Torque	Not applicable	N.cm
Minimum Cable Retention Force	50	N
Minimum Cable Retention Torque Value	Not applicable	N.cm
Maximum Weight	5.6	g
Other Characteristics	**Values**	**Units**
Rapid Change of Temperature - peak value	165	°C
Operating Temperature Range	-65 to +165	°C
Maximum Leakage (panel sealed connectors)	Not applicable	-
Maximum Leakage (hermetically sealed connectors)	Not applicable	-
Solderability	Applicable	-
Soldering Proof	Not applicable	-
Cables Used	SHF 4.2MS	-

VARIANT 05 – STRAIGHT PLUG, SOLDER TYPE, FOR SHF 5MS CABLE

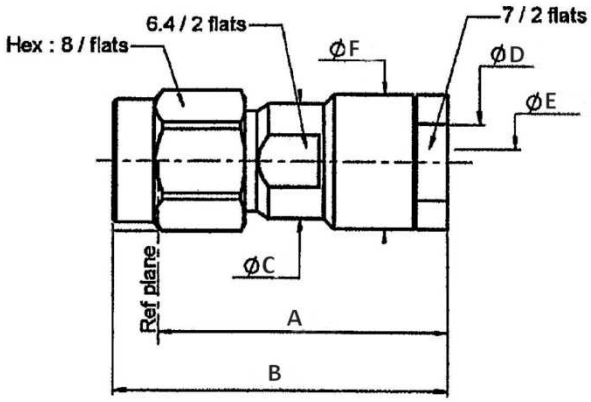

Symbol	Millimetres		Notes
	Min.	Max.	
A	18.47	18.82	
B	21.37	21.72	
ØC	7.1	7.3	
ØD	4.7	4.75	
ØE	1.51	1.55	
ØF	8.4	8.6	

NOTES:

1. All dimensions are in mm.

Electrical Characteristics	**Values**	**Units**
Frequency Range	0-40	GHz
Maximum VSWR	1.05 + 0.005×f (GHz)*	-
Maximum Insertion Loss	0.03×√f (GHz)*	dB
RF Leakage	-(90 - f (GHz))*	dB
Dielectric Withstanding Voltage (Sea Level) (Voltage Proof Test)	750	Vrms
Power Handling Category (Figure 1(a))	Category I	-
Mechanical Characteristics	**Values**	**Units**
Minimum Centre Contact Retention Force (axial)	27	N
Minimum Centre Contact Retention Torque	Not applicable	N.cm
Minimum Cable Retention Force	60	N
Minimum Cable Retention Torque Value	Not applicable	N.cm
Maximum Weight	5.7	g
Other Characteristics	**Values**	**Units**
Rapid Change of Temperature - peak value	165	°C
Operating Temperature Range	-65 to +165	°C
Maximum Leakage (panel sealed connectors)	Not applicable	-
Maximum Leakage (hermetically sealed connectors)	Not applicable	-
Solderability	Applicable	-
Soldering Proof	Not applicable	-
Cables Used	SHF 5MS	-

* Limited up to 30 GHz by cable.

VARIANT 07 – SQUARE FLANGE PLUG RECEPTACLE FOR 0.3mm DIA. PIN

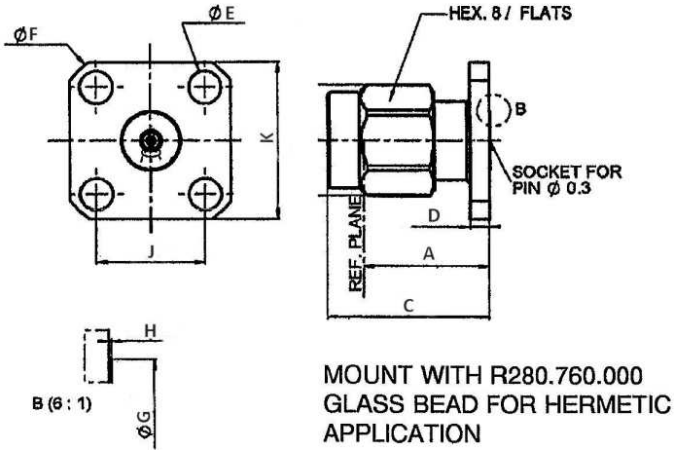

Symbol	Millimetres		Notes
	Min.	Max.	
A	10.03	10.09	
C	12.93	12.99	
D	1.4	1.7	
ØE	2.55	2.7	4 Holes
ØF	15.9	16.1	
ØG	4.46	4.66	
H	0.055	0.135	
J	8.59	8.69	2 Places
K	12.6	12.8	2 Places

NOTES:

1. All dimensions are in mm.

Electrical Characteristics	**Values**	**Units**
Frequency Range	0-40	GHz
Maximum VSWR	1.05 + 0.005×f (GHz)	-
Maximum Insertion Loss	0.03×√f (GHz)	dB
RF Leakage	-(90 - f (GHz))	dB
Dielectric Withstanding Voltage (Sea Level) (Voltage Proof Test)	750	Vrms
Power Handling Category (Figure 1(a))	Category III	-
Mechanical Characteristics	**Values**	**Units**
Minimum Centre Contact Retention Force (axial)	27	N
Minimum Centre Contact Retention Torque	Not applicable	N.cm
Minimum Cable Retention Force	Not applicable	N
Minimum Cable Retention Torque Value	Not applicable	N.cm
Maximum Weight	4.8	g
Other Characteristics	**Values**	**Units**
Rapid Change of Temperature - peak value	165	°C
Operating Temperature Range	-65 to +165	°C
Maximum Leakage (panel sealed connectors)	Not applicable	-
Maximum Leakage (hermetically sealed connectors)	Not applicable	-
Solderability	Applicable	-

Soldering Proof	Applicable	-
Cables Used	Not applicable	-