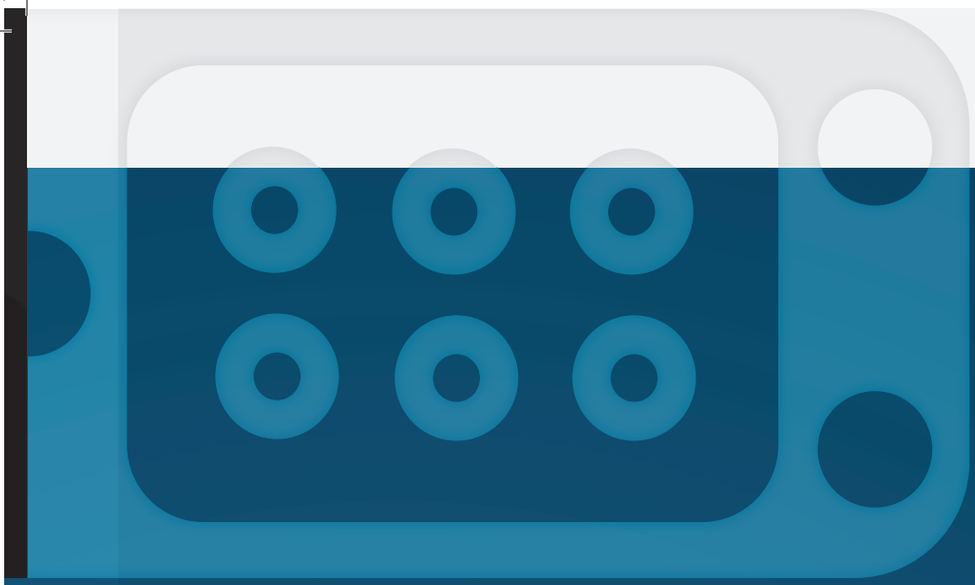

MULTIPIN
CONNECTORS

MULTIPIN CONNECTORS

Full Line Catalog

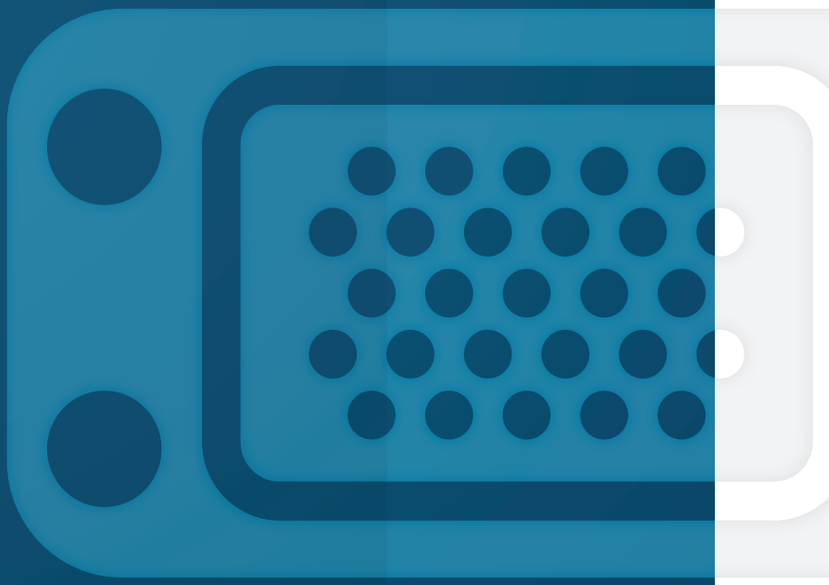

SIMPLIFICATION IS OUR INNOVATION

Radiall™

SIMPLIFICATION
is our INNOVATION

Radiall is a community of dedicated individuals with a shared purpose: simplify life for all those who innovate. Our manufacturing expertise allows us to deliver lighter and smaller products that simplify implementation and drive performance. We recognize that simplification starts with us, but proves its true benefits when it reaches you.

TABLE OF **CONTENTS**

EPX® Series 1
EN4644

Quick Multipin Series 2

QuickFusio™ Series 3

HDQX Series 4

NSX-BPX Series 5
Arinc 600

MPX Series 6
MIL-DTL-83527B, AECMA EN3682

DSX Series 7
SAE AS81659, Arinc 404

MMC Series 8

B & MCS-R Series 9

MM & MB Series 10

RTX Series 11
EN3716

MIL-DTL Series 12

Quick Install (QR) 13

Part Number Index 14

AEROSPACE
DEFENSE
RAIL
MEDICAL
SPACE
TELECOM
INDUSTRIAL
TEST & MEASUREMENT

OUR **COMPANY**

Since 1952, we have been enabling the future through collaboration with our customers. The results are a range of innovative and award-winning products that customers trust for unrivaled repeatability and performance.

We are a global company with facilities around the world that specializes in manufacturing the highest-quality interconnect components to support the most demanding applications. At Radiall, you can rely on us to be the industry's global market leader.

INDUSTRIES WE SERVE

For over 60 years, we have fostered relationships grounded in trust by sharing our extensive market knowledge, technological expertise and experience in each and every interaction. Through an understanding of our customers' unique challenges, we are able to design simple solutions specific to their application and requirements.

*Visit **www.radiall.com** for more information.*

OUR VALUES

Guiding Our Actions
Every Day

GROW TOGETHER
With Our Teams and the World Around Us

BE GENUINE
To Foster Mutual Trust and Grow

MAKE IT SIMPLE
To Accelerate Innovation

DARE TO BE AUDACIOUS
To Make a Difference

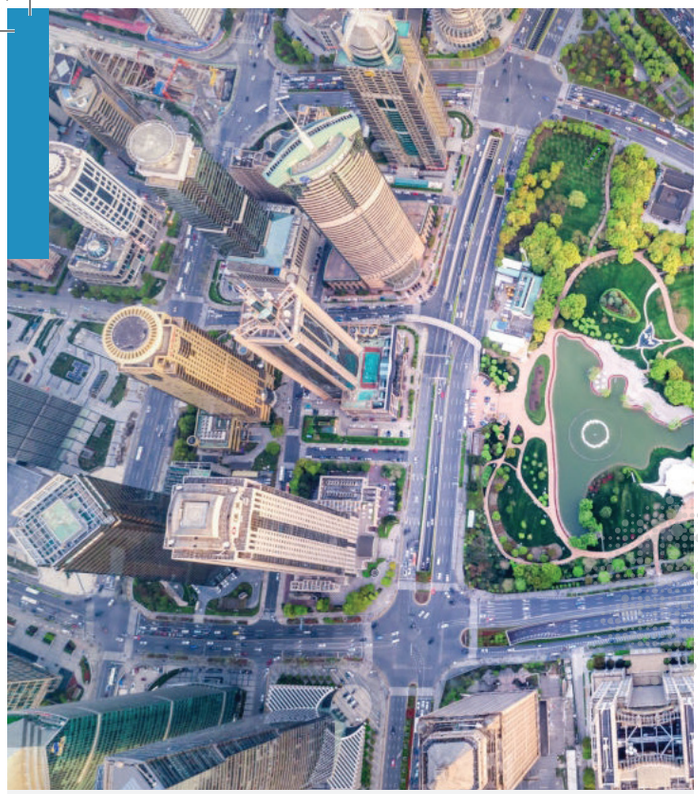

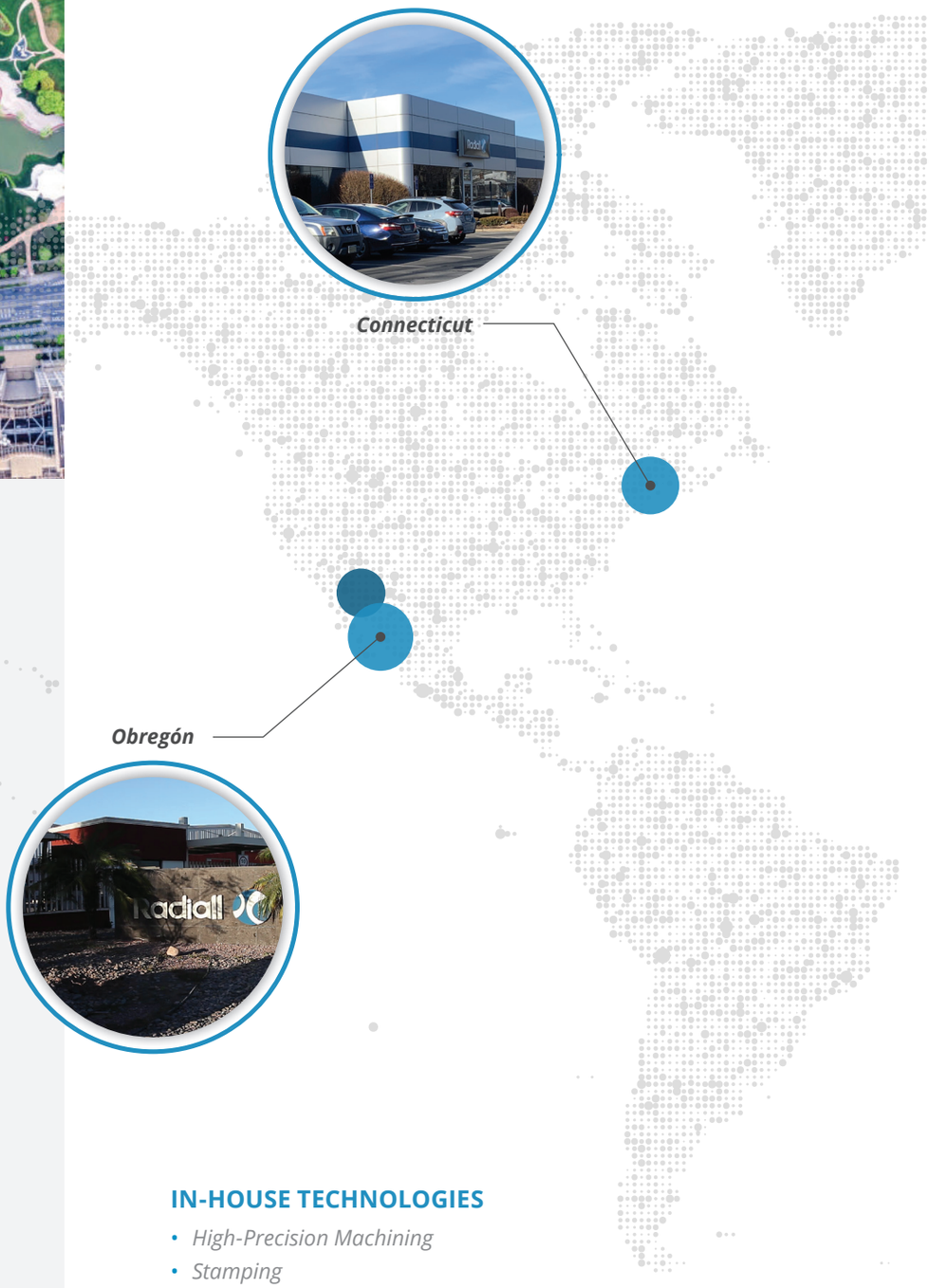

AWARDS & CERTIFICATIONS

Being recognized for our product performance, innovation and timely fulfillment is a testament to our employees' commitment to our customers. We are a world market leader in reliable, repeatable performance and take great pride in providing award-winning innovation and vendor support.

Our leadership is focused on long-term success and developing key technologies that simplify our customers' lives.

We're committed to our people, the environment and to the highest quality standards including ISO 9001, ISO 14001 and AS9100 certifications. We are compliant with the EU Restriction of Hazardous Substances (RoHS) as well as the Registration, Evaluation, Authorization and Restrictions of Chemicals (REACH) systems.

Visit our website to view RoHS and REACH compliance information for specific Radiall part numbers.

IN-HOUSE TECHNOLOGIES

- *High-Precision Machining*
- *Stamping*
- *Plating*
- *Molding*
- *Polishing*
- *Laser, Ultrasonic, Vapor, Soldering*
- *Etching on Si*
- *Thick Film on AlN*
- *Testing and Simulation*

GLOBAL PRESENCE

Recognizing that relationships are rooted in trust, we strive to earn our customers' confidence by demonstrating our market knowledge, technological expertise and experience in each and every interaction.

SALES OFFICES **INDUSTRIAL PLANTS**

COMPREHENSIVE **PORTFOLIO**

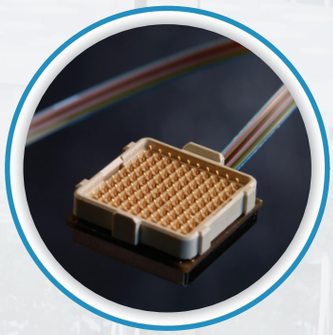

Active Optics

Our high-performance, optical interconnection brand, D-Lightsys®, provides optical transceiver and electronic solutions suitable for harsh environments.

Antennas

With a military and industrial focus, we have solutions for radio tactical communications, vehicles, positioning, LMR/PMR and telemetry applications.

Microwave Components

Our range covers a wide frequency spectrum from DC to 50 GHz, and includes terminations, attenuators, couplers, power dividers, filters and other specialized components.

Optical Connectors

Designed for demanding applications where reliability and high performance are required, our cost-effective optical connectors serve telecom, industrial, aerospace and defense markets.

Outdoor Connectors

Designed for outdoor conditions, our range includes high-power RF coaxial connectors, linking antennas and radio units, as well as innovative multi-signal I/O solutions for optical, Ethernet, power or coaxial links between radio and network.

RF & Microwave Switches

The patented design of our unique, modular actuator and transmission links guarantees operation up to 10 million cycles with superior repeatability.

At Radiall, we provide a comprehensive portfolio of products that meet the application requirements of the key industries we serve. By listening to our customers, we continuously develop new solutions and update our extensive range of products.

With over sixty years of experience and an understanding of the ever-changing business and our customers' technical requirements, we deliver the optimal and most cost-effective, end-to-end interconnect solutions available today.

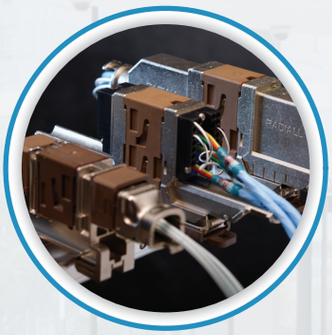

Multipin Aerospace Connectors

For more than 40 years, commercial airframes have trusted our range of rack and panel connectors and modular solutions. Our new miniature connector series combines high performance and reduced weight to meet civil and military aerospace industry demands.

Multipin Industrial Connectors

Our Van-System brand designs and produces a range of robust circular electrical connectors suitable for harsh environments, such as railways, machine tools, and plant engineering equipment.

Optical Cable Assemblies

Our extensive product range and worldwide presence supports customers with standard configurations as well as optimized solutions based on customer requirements.

RF Cable Assemblies

Low-loss and high-frequency characterize our extensive range of cable assemblies, including flexible, semi-rigid and hand-formable solutions with a broad combination of cables and connectors.

RF Coaxial Connectors

We offer the widest range of RF coaxial connectors in the industry; 55 product series are available, including AEP and Mil QPL connectors.

Space Qualified Components

Known for high quality as well as reliability and performance, our product offering includes a wide range of coaxial connectors, cable assemblies, microwave components and switches with a frequency range up to K_a band.

SHIPPING & PACKAGING

Radiall has various size boxes for optimum packaging and protection.

- Eco-friendly labeling tape makes it easy to identify Radiall goods. Printing is minimized to reduce processing and all boxes can be recycled (except for the adhesive).
- Each product part number has a dedicated carton box adapted to the size of its packaging.

TAPE & REEL

Available in 100, 500, 1,800, 3,000 or in custom quantities, products are arranged in an anti-static polyester blister tape covered with a ribbon defender and then rolled up on a polyester reel. This packaging is CEI 286-3 compliant and dedicated to surface mount components. It is compatible with all pick and place automatic machines.

SHIPPING INFORMATION

Shipping lead times may vary depending on the location and time zone in which products are stocked or manufactured.

Radiall offers five types of standard packaging, which dictate the first level product container. All of our packages are identified with the Radiall name, part number, lot number and quantity.

BLISTER TRAY

Custom, stackable trays minimize damage when shipping fragile or large connectors. These trays protect against shock and even have an anti-dust lid/wrapping.

BULK

Bulk packaging is available in multiple bags or a box containing 10, 20, 25, 50 or 100 of each component part in separate bags.

BLISTER BULK PACK

This packaging is suitable for multipart products and small connectors. Radiall offers four types of blister bulk pack depending on the configuration of the product and number of pieces (10, 20, 50 or 100). It is easy to open and ideal for in-field assembly.

UNIT PACKAGING

All connectors can be ordered in unit bags. The connector and all of the component parts come in individual tear-proof polyethylene bags. Unit packaging must be specified when ordering: add “W” at the end of the part number (except for adapters and specific products).

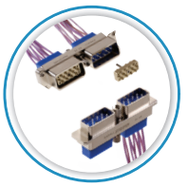

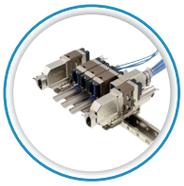

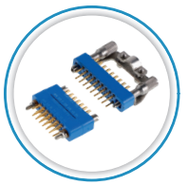

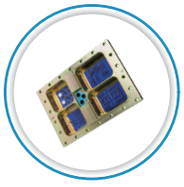

	ON-BOARD MULTIPIN APPLICATIONS	
	CIVIL AEROSPACE	MILITARY AEROSPACE
EPX® - EN4644	• *Airframe production break* • *Avionics* • *Aerospace general purpose* • *IFE* • *Power & flight management* • *Radar*	• *Power management* • *Avionics* • *Flight management* • *Radar* • *Weapons systems*
HDQX	• *Avionics* • *Aerospace general purpose* • *IFE* • *Flight management* • *Radar*	
NSX - ARINC 600	• *Avionics* • *Aerospace general purpose* • *IFE* • *Flight management*	
QM	• *Airframe production break* • *Aerospace general purpose* • *IFE*	
DSX - MIL-C-81659 ARINC 404	• *Avionics* • *Displays* • *Aerospace general purpose* • *IFE* • *Flight management*	• *Avionics* • *Displays* • *Flight management*
MM MB	• *Avionics* • *Flight management* • *Radar* • *Weapons systems*	• *Avionics* • *Flight management* • *Radar* • *Weapons systems*
RTX - MIL-STD-1553	• *Radar* • *Aerospace general purpose*	• *Radar* • *Weapons systems*
MPX - MIL-C-83527		• *Avionics* • *Flight management*

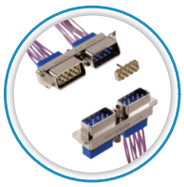

	ON-GROUND MULTIPIN APPLICATIONS		
	RADARS	INDUSTRIAL	TEST EQUIPMENT
EPX® - EN4644	• *Avionics* • *Flight management* • *Radar* • *Weapons systems*		
HDQX	• *Avionics* • *Flight management* • *Radar* • *Weapons systems*		
B	• *Avionics* • *Flight management* • *Radar* • *Weapons systems*	• *Avionics* • *Flight management* • *Radar* • *Weapons systems*	
MCSR	• *Avionics* • *Flight management* • *Radar* • *Weapons systems*		
MMC	• *Avionics* • *Flight management* • *Radar* • *Weapons systems*		• *Avionics* • *Flight management* • *Radar* • *Weapons systems*

EPX® SERIES

EN4644

Section 1 Table of Contents

INTRODUCTION

Introduction 1-3
Disconnect Applications 1-4
Rack & Panel Applications 1-5

EPX® SERIES

Disconnect Connectors 1-6
Electrical Characteristics 1-6
Mechanical Characteristics 1-6
Environmental Characteristics 1-6
Rack & Panel Connectors 1-7
Electrical Characteristics 1-7
Mechanical Characteristics 1-7
Environmental Characteristics 1-7
Inserts & Contact 1-8
Electrical Characteristics 1-8
Retention Characteristics 1-9

INSERTS

Insert Selection Table 1-10
How to Order EPX® Inserts 1-11
EPX® Insert Arrangements ..... 1-12 to 1-14

CONTACTS

Signal & Power Crimp Contacts 1-15
Oversized & Reduced Crimp Barrel Contacts 1-16
Coaxial Crimp Contacts 1-17
Twinax & Triax Crimp Contacts 1-18
Quadrax & BMA Crimp Contacts 1-19
LuxCis® Fiber Optic Contacts 1-20
Signal PC Tail Contacts 1-21
Quadrax Size 8 PC Tail Contacts 1-22
Filler Plugs & Sealing Plugs 1-23

Section 1 Table of Contents Continued

DISCONNECT APPLICATION

EPXA Product Overview 1-24
EPXB1 Product Overview 1-25
How to Order EPXA & EPXB1 Shell 1-26
How to Order EPXA & EPXB1 Assembly Kit 1-27
EPXA & EPXB1 Polarization Code 1-28
Contacts Termination for EPXB1 1-29
EPXA Shell Dimensions 1-30
EPXB1 Shell Dimensions 1-31
EPXA & EPXB1 Spare Parts 1-32
EPXA & EPXB1 Accessories 1-33
EPXB2 Product Connectors 1-34
EPXB2 Product Overview 1-35
EPXB2 Range Overview 1-36
EPXB2 Latest Innovations 1-37
How to Order EPXB2 Shell 1-38
How to Order EPXB2 Assembly Kit 1-39
EPXB2 Polarization Code 1-40
Contacts Termination for Receptacles 1-41
EPXB2 Alluminum Shell Dimensions ..... 1-42 to 1-43
EPXB2 Composite Shell Dimensions 1-44
EPXB2 Weights 1-45
EPXB2 Accessories 1-46
EPXB2 Spare Parts 1-47
Tools 1-48

RACK & PANEL APPLICATION

EPXB3 Product Overview 1-49
How to Order EPXB1, B2, B3 & B4 Shell 1-50
How to Order EPXB1, B2, B3 & B4 Assembly Kit for LRM 1-51
EPXB Shell Mounting 1-52
EPXB Polarization Code 1-53
Contacts Termination for EPXB1, B2, B3 & EPXB4 Plugs 1-54
EPXB1 Shell Dimensions & Panel Cut-Out 1-55
EPXB2 Shell Dimensions & Panel Cut-Out 1-56
EPXB3 Shell Dimensions & Panel Cut-Out 1-57
EPXB4 Shell Dimensions & Panel Cut-Out 1-58
Rack & Panel Accessories 1-59
Rack & Panel Tools 1-60
EPXB2 Product Overview 1-61
How to Order EPXB2 Shell for LRU 1-62
How to Order EPXB2 Assembly Kit for LRU 1-63
EPX® Galley ARINC 810 Product Overview 1-64
How to Order EPX® Galley Equipment Connector 1-65
Dimensions & Panel Cut-Out 1-66
Multigang EPX Connectors 1-67

INTRODUCTION

Radiall is recognized in the aerospace and defense industries for offering one of the broadest innovative product portfolios for connector interconnect solutions. The benefit of our experience with ARINC connectors permits Radiall to provide customers with a strong and global solution.

The EPX® series offers a wide range of solutions based on two insert sizes with a large variety of shells and contacts. This product range provides an excellent trade-off between the number of available contacts and the space used. The EPX® series is completely modular and expandable.

EPX® connectors are standardized by the EN4644 European standard.

A **high-density solution** compared to circular connectors:
- Slim shell design with high contact density
- Stackable shells do not require additional space for locking and unlocking the connectors

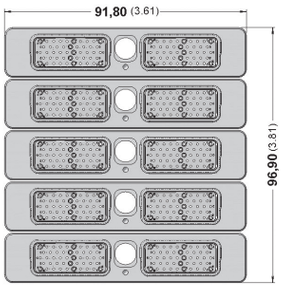

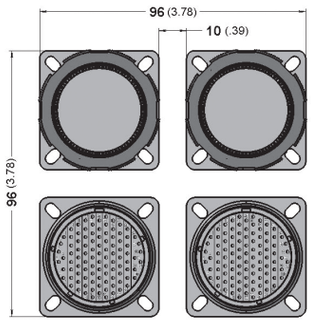

EPXB

*5 shells #2 with 2*48 Cts*

- ***Total Cts:*** *480*
- ***Total surface:*** *96.90 * 91.80 = 8895.42 mm²*
- *Gives 18.53 mm²/contact*

38999

4 shells #23 with 100 Cts

- ***Total Cts:*** *400*
- ***Total surface:*** *96.00 * 96.00 = 9216 mm²*
- *Gives 23.04 mm²/contact*

A **cost saving** and **user-friendly** solution:
- Inserts can be wired in the workshop and later installed in the shells
- A common panel cut-out simplifies the connector installation
- Inserts can be easily installed and removed from the shell
- Inserts and shells are keyed to prevent mis-mating
- Standard Mil spec tools for contact crimping and contact insertion/extraction
- Field replaceable sub-assemblies
- Vibration resistant self-locking threads

A **modular concept** with a large variety of options:
- Shell can accommodate a wide variety of inserts for signal, power, coax, data bus, fiber optic and high-frequency BMA contacts
- Optional ground blocks (to meet the FAA HIRF requirements)
- Pin and socket inserts can be installed in either plug or receptacle shells (pin contacts are always fitted in the pin insert)

EPX® is a **versatile solution** available in two different versions:
- Aluminium
- Composite

Introduction

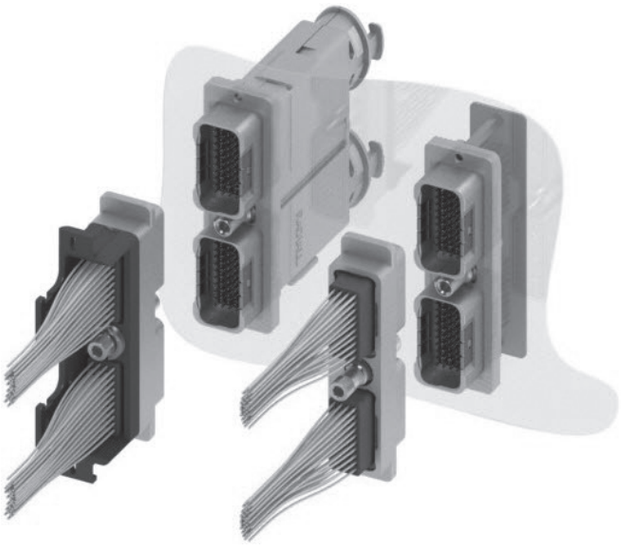

CABLE-CABLE **PCB-CABLE**

DISCONNECT APPLICATIONS

Specially designed for panel integration on EWIS applications, EPX® disconnect connectors cover cable-to-cable and PCB-to-cable links in major commercial and business jet aircrafts.

The connector can be easily identified by the locking device located directly on the connector (quarter turn device for A1 and B1 and central screws for EPXB2). This disconnect solution offers secure mating while answering OEM's most stringent requirements, and provides:

- Modularity with three shell sizes: EPXA1, EPXB1 and EPXB2 - available as lightweight shells and compatible with several options such as ground block functionality. EPX® connectors also feature a large variety of inserts and a unique range of contacts covering any technology. EPX® connectors answer all connecting needs with the use of a limited number of components.
- Space savings with the combination of a slim shell design and high density inserts. In addition, EPX® disconnect stackable shells do not require additional space to lock and unlock the connectors.
- Time savings and cost effectiveness with modular parts that enable pre-wiring. Connectors are easy to assemble as the receptacle can be pre-installed. Inserts will be wired in the shop and plugged later, which saves integration time.

EPXA1

EPXB1

EPXB2

Introduction

RACK & PANEL APPLICATIONS

In response to the need of system miniaturization and new equipment design, Radiall offers EPX® connector solutions for Line Replaceable Unit (LRU) and Line Replaceable Module (LRM). Discover more about these blind mate connectors:

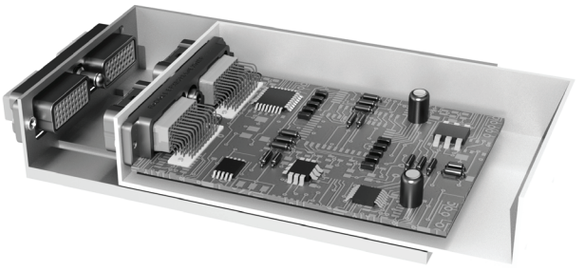

EPXB2 FOR LRU

EPXB2 FOR LRU

Largely used in distributed architecture, small Line Replaceable Units in an aircraft need compact, lightweight and cost-effective connectors.

EPXB2 connectors equipped with centering guide will combine high density, low efforts and lightweight features. Discover the whole range of EPXB inserts offering from signal to power or quadrax contacts (available in straight or right angle PC tails and crimp contacts).

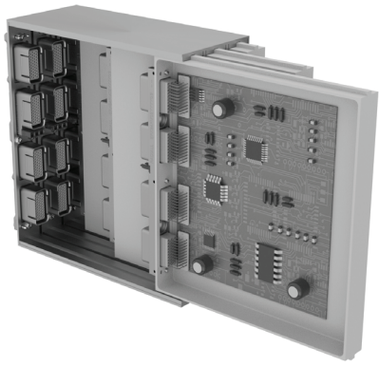

EPX RACK & PANEL FOR LRM

EPX RACK & PANEL FOR LRM

Today, equipment manufacturers look for more cost-effective and easy to maintain solutions such as Line Replaceable Module (LRM). As a result, Radiall has developed a new generation of Rack & Panel connectors. EPX® Rack & Panel connectors feature a modular, lightweight and high density shell that can be used on standalone PCB architecture.

EPX® Rack & Panel connectors are the perfect solution when equipment needs to combine compactness, weight savings and very high density. They offer:

- A modular range: From size 1 to size 4 using the complete range of EPX® inserts.
- Low mating force contacts from EPX® range that can reach very high density.
- A comprehensive range of contacts: Right angle or straight PC tails for signal, coax, quadrax, or power contacts.

EPX® Series

DISCONNECT CONNECTORS

ELECTRICAL CHARACTERISTICS

EMI Shielding Effectiveness EN2591-213

FREQUENCY (MHz)	LEAKAGE ATTENUATION (dB)
100	65
200 or 300	63
400	62
500 and 600	60

OTHER CHARACTERISTICS

- **Shell-to-Shell Conductivity:** < 2.5 mΩ
- **Operating Voltage:** 400 VRMS or 500 VDC at sea level, according to EN2591-205
- **Voltage Stability (Ground Block):** Maximum variation 4 mV according to SAE AS 81714 (MIL-T-81714)
- **Lightning Strike:**
  - 5 kA - 1,600 V for EPX® connectors in aluminium version
  - 3 kA - 1,600 V for EPX® connectors in composite version

MECHANICAL CHARACTERISTICS

MATING/UNMATING

SHELL TYPE	MATERIAL	MATING/UNMATING
EPXA1/EPXB1/EPXB2	Aluminium	100 Cycles
EPXB1/EPXB2	Composite	100 Cycles

- EPXB2 mating torque: 1.2N.m +/- 0.1

VARIATION & SHOCK

SHELL TYPE	MATERIAL	VIBRATION *For 8 hrs on Each of the 3 Axis/Interruption < 1 µs EN2591-403 EIA 364-28*	SHOCK *3 Shocks on Each Axis EN2591-402 EIA 364-27*
EPXA1 / EPXB1	Aluminium	Acceleration 27.8 g (Test Condition 6 Letter G)	Shock Amplitude 50 g/Duration 11 ms
EPXB1 / EPXB2	Composite		
EPXB2	Aluminium		100 Shock Amplitude 300 g/Duration 3 ms
Disconnect EPX® with Quadrax Contacts	-	Acceleration 16.9 g (Test Condition 5 Letter E)	100 Shock Amplitude 50 g/Duration 11 ms

ENVIRONMENTAL CHARACTERISTICS

- **Temperature Range:** according to EIA364-32 and EN2591-305
  - For EPXB2 aluminium, EPXB1 and EPXA1 shells: -65 °C/+175 °C (-85 °F/+347 °F)
  - For EPXB2 composite shell: -65 °C/+125 °C (-85 °F/+257 °F)
- **Temperature Life:** 1,000 hours at maximum temperature
- **Salt Spray:** 96 hours (nickel-plated aluminium and composite) EN2591-307 EIA 364-26 test condition A
- **Humidity:** 10 days with temperature variation from -10 °C to +65 °C EIA 364-31 Method 4, test condition B
- **Altitude Immersion:** EN2591-314 EIA 364-03:
  - EPXB insert: 3 cycles at 50,000 ft
  - EPXB Bulkhead class insert: 3 cycles at 55,000 ft
- **Air Leakage for EPXB2 Bulkhead Receptacle:** Level from EN3645; test according EN2591-312 method B:
  - 4.4×10^{-3} cm^3/s (= 16 × 10-6 m^3/h)

RACK & PANEL CONNECTORS

ELECTRICAL CHARACTERISTICS

EMI Shielding Effectiveness EN2591-213

FREQUENCY (MHz)	LEAKAGE ATTENUATION (dB)
100	65
200 and 300	63
400	62
500 and 600	60

OTHER CHARACTERISTICS

- **Shell-to-Shell Conductivity:** < 2.5 mΩ according to EN2591-205
- **Lightning Strike:** 5 kA - 1,600 V

MECHANICAL CHARACTERISTICS

MATING/UNMATING

SHELL TYPE	MATERIAL	MATING/UNMATING
EPXB1/EPXB2/EPXB3/EPXB4	Aluminium	500 Cycles

The minimum mating forces are described in the EN4644 standard and depends on the connector size and insert arrangement. Consult Radiall for more information.

VARIATION & SHOCK

SHELL TYPE	MATERIAL	VIBRATION *For 8 hrs on Each of the 3 Axis/Interruption < 1 µs EN2591-403 EIA 364-28*	SHOCK *3 Shocks on Each Axis EN2591-402 EIA 364-27*
EPXB1/EPXB2/EPXB3/EPXB4	Aluminium	Acceleration 16.9 g (Test Condition 5 Letter E)	Shock Amplitude 50 g/Duration 11 ms

ENVIRONMENTAL CHARACTERISTICS

- **Temperature Range:** -65 °C/+125 °C (-85 °F/+257 °F)
- **Temperature Life:** 1,000 hours at maximum temperature
- **Salt Spray:** 96 hours EN2591-307 EIA 364-26 test condition A
- **Humidity:** 10 days with temperature variation from -10 °C to +65 °C EIA 364-31 Method 4, test condition B
- **Altitude Immersion:** 3 cycles at 50,000 ft EN2591-314 EIA 364-03

EPX® Series

INSERTS & CONTACT

ELECTRICAL CHARACTERISTICS

Electrical characteristics conform to SAE AS 39029 (MIL-C-39029, type A). Contacts conform to EN3155-076 and EN3155-077.

CONTACTS

CONTACT SIZE	WIRE SIZE	MAX CURRENT AMPS
22	AWG22	5
	AWG24	3
	AWG26	2
20	AWG20	7.5
	AWG22	5
	AWG24	3
16	AWG16	13
	AWG18	10
	AWG20	7.5
12	AWG12	23
	AWG14	17
	AWG16	13
8	AWG8	46
5	AWG8	46 [1]
	AWG12	23
	AWG16	13

GROUND BLOCK CONTACT

617221050

	CONTACT WITH WIRE SIZE	MAX CURRENT AMPS
Contact to Contact	Contact + AWG20	7.5
Contact to Mounting Surface	Contact + AWG20	7.5

DIELECTRIC WITHSTANDING VOLTAGE

EN2591-207 EIA 364-20 with Leakage Current < 1mΩ

LEVEL	ENVIRONMENTAL INSERTS VOLTAGE (VRMS)	NON-ENVIRONMENTAL INSERT VOLTAGE (VRMS)
Sea Level	1,500	1,500
50,000 feet	800	600
70,000 feet	800	300

INSULATION RESISTANCE

EN2591-206 EIA 364-21

TEMPERATURE	INSULATION RESISTANCE
Ambient Temperature	> 5,000 mΩ
175 °C (+347 °F)	> 200 mΩ

Notes

1. Size 5 contacts are not part of SAE AS 39029 (MIL-C-39029, type A).

INSERTS & CONTACT

RETENTION CHARACTERISTICS

Retention forces indicated below are valid for terminated contacts (as per EN2591-409 and EIA364-29).

CONTACT SIZE	RETENTION FORCE	MAX DISPLACEMENT
Ground Block	88 N (20 lbs)	0.30 mm (0.012 in.)
22	53.4 N (12 lbs)	0.38 mm (0.015 in.)
20	89 N (20 lbs)	0.38 mm (0.015 in.)
16	111.2 N (25 lbs)	0.38 mm (0.015 in.)
12	133.45 N (30 lbs)	0.38 mm (0.015 in.)
8	133.45 N (30 lbs)	0.38 mm (0.015 in.)
5	133.45 N (30 lbs)	0.38 mm (0.015 in.)

- **Insert Retention:** 400 N (90 lbs) (EN2591-410 EIA 364-35)
- **Maximum Insert Displacement in the Shell Cavity:** 0.30 mm (0.012 in.)

Inserts

INSERT SELECTION TABLE

Insert name should be used when ordering EPX® insert.
Insert code should be used when ordering EPX® assembly kit
Inserts available in Bulkhead class are identified with the following icon:

SERIES	INSERT NAME	INSERT CODE	CONTACT SIZE & TYPE [1]										TOTAL CONTACTS
			22*	20*	15 OR 16*	16	16	12*	8	8	5	5	
			SIGNAL	POWER	POWER OR COAX	LUXCIS® FIBER OPTIC	POWER IN FIBER OPTIC CAVITY	POWER OR COAX	POWER	QUADRAX OR TWINAX	COAX OR TRIAX	POWER	
EPXA	00	0	-	-	-	-	-	-	-	-	-	-	0
	1C1	A	-	-	-	-	-	-	-	-	1	-	1
	1P1	B	-	-	-	-	-	-	-	-	-	1	1
	04	C	-	-	2	-	-	2	-	-	-	-	4
	09	D	-	3	6	-	-	-	-	-	-	-	9
	14	E	-	14	-	-	-	-	-	-	-	-	14
	14M	F	8	3	3	-	-	-	-	-	-	-	14
	17	G	12	5	-	-	-	-	-	-	-	-	17
	20	H	20	-	-	-	-	-	-	-	-	-	20
EPXB	00	0	-	-	-	-	-	-	-	-	-	-	0
	C3	A	-	-	-	-	-	-	-	-	3	-	3
	P3	B	-	-	-	-	-	-	-	-	-	3	3
	3Q3	C	-	-	-	-	-	-	-	3	-	-	3
	06	D	-	-	-	-	-	6	-	-	-	-	6
	10Q2	E	-	8	-	-	-	-	-	2	-	-	10
	12F6	F	-	-	-	6	6	-	-	-	-	-	12
	F12C	G	-	-	-	12	-	-	-	-	-	-	12
	13C1	H	-	6	4	-	-	2	-	-	1	-	13
	13P1	J	-	6	4	-		2	-	-	-	1	13
	14	K	-	-	14	-	-	-	-	-	-	-	14
	17	L	-	14	-	-	-	3	-	-	-	-	17
	20C1	M	-	19	-	-	-	-	-	-	1	-	20
	20P1	N	-	19	-	-	-	-	-	-	-	1	20
	22	P	-	16	6	-	-	-	-	-	-	-	22
	22V	Q	-	16	6	-	-	-	-	-	-	-	22
	25P1	R	24	-	-	-	-	-	1	-	-	-	25
	25Q1	S	24	-	-	-	-	-	-	1	-	-	25
	28	T	22	-	6	-	-	-	-	-	-	-	28
	30	U	-	30	-	-	-	-	-	-	-	-	30
	34	W	18	16	-	-	-	-	-	-	-	-	34
	40	X	40	-	-	-	-	-	-	-	-	-	40
	48	Y	48	-	-	-	-	-	-	-	-	-	48

Notes

1. *Only contacts marked with an asterisk (*) are included with EPX® insert kit. All other contacts must be ordered separately (i.e. coax, twinax, quadrax and fiber optic contacts).*

Inserts

HOW TO ORDER EPX® INSERTS

Only crimp contacts can be delivered with insert.

EPX

SERIES PREFIX

INSERT SIZE [1]
A: Insert for EPXA
B: Insert for EPXB1, EPXB2, EPXB3 or EPXB4

CLASS [2]
E: Environmental
N: Non-environmental (no rear grommet, no interfacial seal)
H: Non-environmental with a rear grommet, available for pin insert only (recommended for crimp contacts)
T: Non-environmental with an interfacial seal, available for pin insert only (recommended for PC tail contacts)
B: Bulkhead insert with interfacial seal and a Bulkhead rear grommet, available for pin insert only

INSERT NAME
Refer to table on page 1-10 for insert arrangements

INSERT TYPE
P: Pin
S: Socket

INSERT KEYING [3]
A: Keying A
B: Keying B

CONTACT
Without Code: Insert delivered without contacts
S: Signal and power contacts are delivered with inserts but are uninstalled (refer to page 1-10)
Inserts 00, 1C1, 1P1, C3, P3, 3Q3, 12F6, F12C and 3T3 are not available in S contact version

ENVIRONMENTAL INSERT

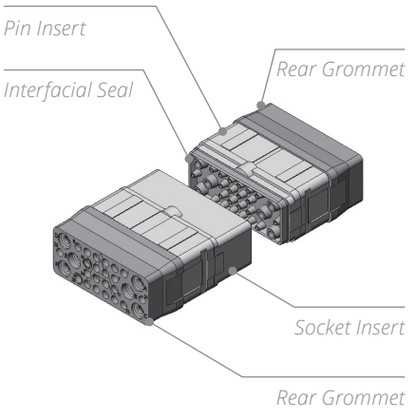

BULKHEAD INSERT

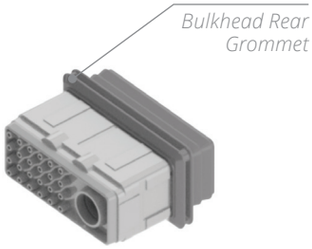

INSERT KEYING DETAIL

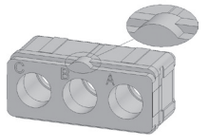

Keying A

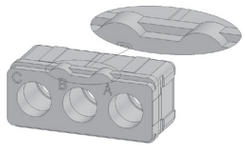

Keying B

Notes

1. Inserts are designed for rear-release and rear-removable contacts.
2. Pin and socket inserts can be installed in either plug or receptacle shell. F6, F12C and 12F6 are only available in E class. Insert 00 is only available in N class.
3. For EPXA1, EPXB1, EPXB3 and EPXB4 shells, use only insert keyed A. For EPXB2 shells, use one insert keyed A and one insert keyed B.

Inserts

EPX® INSERT ARRANGEMENTS

EPXA INSERT ARRANGEMENTS

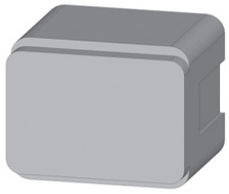	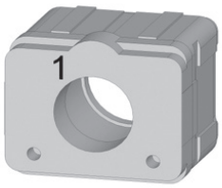	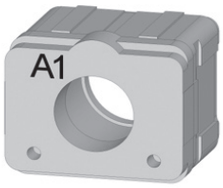	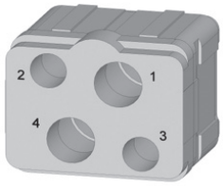
Insert Name 00 **Insert Code 0** Blank Insert [1]	**Insert Name 1C1** **Insert Code A** 1 × size 5 Coax Contacts	**Insert Name 1P1** **Insert Code B** 1 × Size 5 Power Contacts	**Insert Name 04** **Insert Code C** 2 × Size 15 or 16 Contacts 2 × Size 12 Contacts
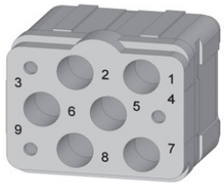	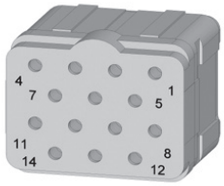	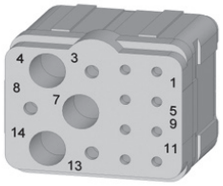	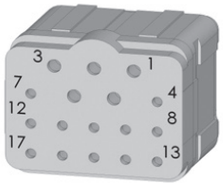
Insert Name 09 **Insert Code D** 3 × Size 20 Contacts 6 × Size 15 or 16 Contacts	**Insert Name 14** **Insert Code E** 14 × Size 20 Contacts	**Insert Name 14M** **Insert Code F** 8 × Size 22 Contacts 3 × Size 20 Contacts 3 × Size 15 or 16 Contacts	**Insert Name 17** **Insert Code G** 12 × Size 22 Contacts 5 × Size 20 Contacts
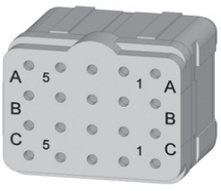			
Insert Name 20 **Insert Code H** 20 × Size 22 Contacts			

WEIGHTS

Average weight per class and type for EPXA inserts without contacts.

INSERT CLASS	INSERT TYPE	
	PIN	SOCKET
E	4.10 g (0.14 oz)	5.30 g (0.19 oz)
N	2.60 g (0.09 oz)	4.00 g (0.14 oz)
H	3.90 g (0.14 oz)	N/A
T	2.80 g (0.10 oz)	N/A

Notes

1. P/N for blank insert is EPXAN00.

Inserts

EPX® INSERT ARRANGEMENTS

EPXB INSERT ARRANGEMENTS

Full size inserts arrangements are compliant with EN4644.

	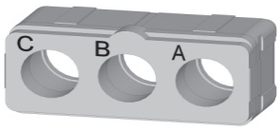	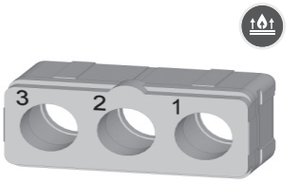	
Insert Name 00 **Insert Code 0** Blank Insert [1]	**Insert Name C3** **Insert Code A** 3 × size 5 Coax Contacts	**Insert Name P3** **Insert Code B** 3 × Size 5 Power Contacts	**Insert Name 3Q3** **Insert Code C** 3 × Size 8 Quadrax Contacts
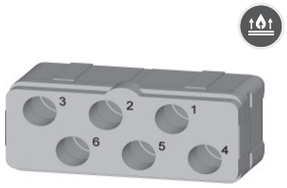	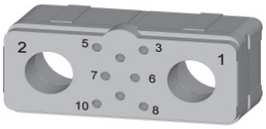	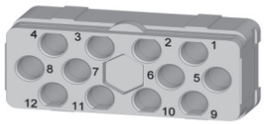	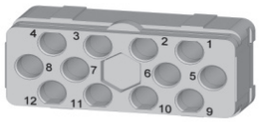
Insert Name 06 **Insert Code D** 6 × Size 12 Medium Power Contacts	**Insert Name 10Q2** **Insert Code E** 8 × Size 20 Contacts 2 × Size 8 Quadrax Contacts	**Insert Name 12F6** **Insert Code F** 6 × Size 16 Optical LuxCis® Termini 6 × Size 16 Special Electrical Contacts	**Insert Name F12C** **Insert Code G** 12 × Size 16 Optical LuxCis® Termini
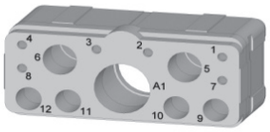	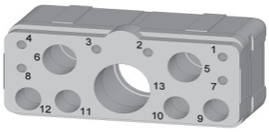	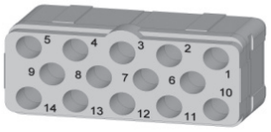	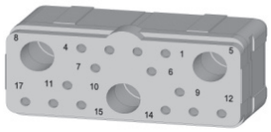
Insert Name 13C1 **Insert Code H** 6 × Size 20 Contacts 4 × Size 15 or 16 Contacts 2 × Size 12 Contacts 1 × Size 5 Coax Contacts	**Insert Name 13P1** **Insert Code J** 6 × Size 20 Contacts 4 × Size 15 or 16 Contacts 2 × Size 12 Contacts 1 × Size 5 Coax Contacts	**Insert Name 14** **Insert Code K** 14 × Size 15 or 16 Contacts	**Insert Name 17** **Insert Code L** 14 × Size 20 Contacts 3 × Size 12 Contacts
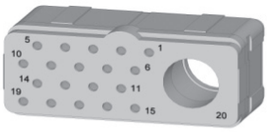	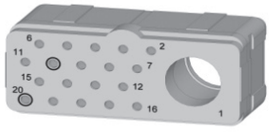	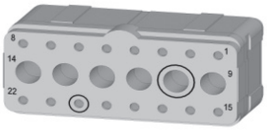	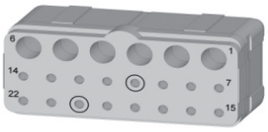
Insert Name 20C1 **Insert Code M** 19 × Size 20 Contacts 1 × Size 5 Coax Contacts	**Insert Name 20P1** **Insert Code N** 19 × Size 20 Contacts 1 × Size 5 Coax Contacts	**Insert Name 22** **Insert Code P** 16 × Size 20 Contacts 6 × Size 15 or 16 Contacts	**Insert Name 22V** **Insert Code Q** 16 × Size 20 Contacts 6 × Size 16 Contacts

Notes

1. P/N for blank insert is EPXBN00.

Inserts

EPX® INSERT ARRANGEMENTS

EPXB INSERT ARRANGEMENTS

Full size inserts arrangements are compliant with EN4644.

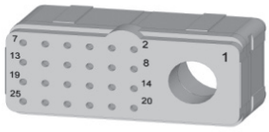	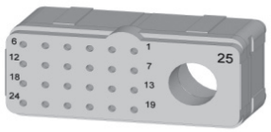	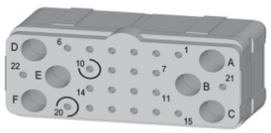	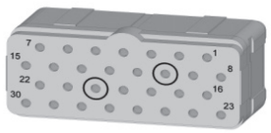
Insert Name 25P1 **Insert Code R** 24 × Size 22 Contacts 1 × Size 8 Power Contacts	**Insert Name 25Q1** **Insert Code S** 24 × Size 22 Contacts 1 × Size 8 Quadrax Contacts	**Insert Name 28** **Insert Code T** 22 × Size 22 Contacts 6 × Size 15 or 16 Contacts	**Insert Name 30** **Insert Code U** 30 × Size 20 Contacts
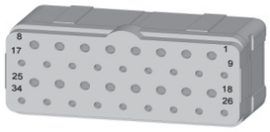	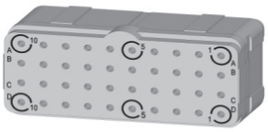	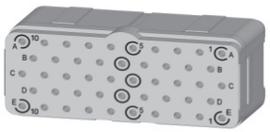	
Insert Name 34 **Insert Code W** 18 × Size 22 Contacts 16 × Size 20 Contacts	**Insert Name 40** **Insert Code X** 40 × Size 22 Contacts	**Insert Name 48** **Insert Code Y** 48 × Size 22 Contacts	

WEIGHTS

Average weight per class and type for EPXB inserts without contacts.

INSERT CLASS	INSERT TYPE	
	PIN	SOCKET
E	7.90 g (0.28 oz)	10.00 g (0.35 oz)
N	5.20 g (0.18 oz)	7.60 g (0.27 oz)
H	7.70 g (0.27 oz)	N/A
T	5.50 g (0.19 oz)	N/A
B	8.50 g (0.30 oz)	N/A

Contacts

SIGNAL & POWER CRIMP CONTACTS

EPX® series offers a wide range of contacts compliant with EN3155 and SAE AS 39029. The available contacts cover aerospace applications for terminating to both cables and printed circuit boards.

- Signal and power contacts
- High frequency with coax, twinax and triax contacts
- Ethernet links with Quadrax contacts
- Optical links with LuxCis® contacts

CONTACT SELECTION TABLE

CONTACT SIZE		WIRE SIZE	TYPE	ENVIRONMENTAL PART NUMBER	NON-ENVIRONMENTAL PART NUMBER	CRIMPING TOOL	POSITIONER	SELECTION	INS/EXT TOOL	MATERIAL OF TOOL
22		22	Pin	617200		282281 M22520/2-01	282970 M22520/2-23	4	282522 (M81969/14-01)	Plastic
		24						3		
		26	Socket	617300						
20		20	Pin	617221		282281 M22520/2-01	282971 M22520/2-08	7	282522001 (M81969/39-01)	Plastic
		22						6		
		24	Socket	617320				5		
16		16	Pin	617240		282291 M22520/1-01	282972 M22520/1-02	6	282515 (M81969/14-03)	Plastic
		18	Socket	617340				5		
		20						4		
	For Ground Block	20	Pin	617221050		282281 M225520/2-01	282581015 M22520/2-11	7	282886 M81969/1-02	Metal
			Socket	N/A						
	For Optical/ Electrical Cavity	16	Pin	617235003 [1]		282291 M22520/1-01	282581013	6	282515 (M81969/14-03)	Plastic
		18						5		
		20						4		
12		12	Pin	617250		282291 M22520/1-01	282972 M22520/1-02	8	282549004 (M81969/14-04)	Plastic
		14	Socket	617350				7		
		16						6		
8		8	Pin	617291007 for AWG8	617291002 [2&3]	R282600000 M22520/ 23-01 + Die set R282650000 M22520/23-02	282588	N/A	282549001	Metal
		10	Socket	617391008 for AWG8	617391002 [2&3]					
5		8	Pin	617280003 for Size 8, 617280004 for Size 10	617280 [2&4]	R282600000 M22520/ 23-01 + Die set R282650000 M22520/23-02	282557020	N/A	282946 (M81969/28-01)	Metal
		10	Socket	617390003 for Size 8, 617390004 for Size 10	617390 [2&4]		282557021			
		12	Pin	617260002	617260001 [2&4]	282613	282586003	6		
		16	Socket	617370005	617370001 [2&4]		282586005	4		

Notes

1. Electrical contacts for optical inserts are always pin contacts (hermaphrodite).
2. In order to make these contacts environmental, it is necessary to add a sealing boot. Please contact us for additional information.
3. These power contacts can be used in power inserts only (25P1).
4. These power contacts can be used in power inserts only (P3, 13P1 and 20P1).

Contacts

OVERSIZED & REDUCED CRIMP BARREL CONTACTS

CONTACT SIZE		WIRE SIZE	TYPE	PART NUMBER FULL PLATED	CRIMPING TOOL	POSITIONER	SELECTION	INS/EXT TOOL	MATERIAL OF TOOL
22	Reduced Crimp Barrel	28	Pin	617201	282281 M22520/2-01	282970 M22520/2-23	5	282522 (M81969/14-01)	Plastic
		30	Socket	617301			4		
	Oversize Crimp Barrel	20	Pin	617200200	282281 M22520/2-01	282970 M22520/2-23	5		
		22	Socket	617300200			4		
		24					3		
20	Reduced Crimp Barrel	22	Pin	617224001	282281 M22520/2-01	282971 M22520/2-08	4	282522001 (M81969/39-01)	Plastic
		24	Socket	617324001			3		
		26					3		
	Oversize Crimp Barrel	18	Pin	617221200	282281 M22520/2-01	282971 M22520/2-08	5		
		20	Socket	617320200			5		
		22					4		
16	Reduced Crimp Barrel	20	Pin	617241	282291 M22520/1-01	282972 M22520/1-02	5	282515 (M81969/14-03)	Plastic
		22	Socket	617341			5		
		24					4		
	Reduced Crimp Barrel for Optical Electrical Cavity	20	Pin	617235002 [1]	282291 M22520/1-01	282581013	5		
		22					5		
		24					4		
	Oversize Crimp Barrel	14	Pin	617240200	282291 M22520/1-01	282972 M22520/1-02	6		
		16	Socket	617340200			5		
		18					5		

Notes

1. Electrical contacts for optical inserts are always pin contacts (hermaphrodite).

Contacts

COAXIAL CRIMP CONTACTS

CONTACT SIZE	CABLE TYPE	TYPE	ENVIRONMENTAL PART NUMBER	NON-ENVIRONMENTAL PART NUMBER	INS/EXT TOOL	MATERIAL OF TOOL
15-16	RG188 FILECAF1709/6 F1709/8 RG174-RG179-RG316 ASNE0639XY 75 Ohms	Pin	617130		282512 (M81969/14-03)	Metal
		Socket	617030			
	RG178	Pin	617131			
		Socket	617031			
	GORE/AXON P812817 FILECA F1703-134 FILOTEX SP132868	Pin	617132			
		Socket	617032			
	RG178 DT	Pin	617133			
		Socket	617033			
	UT .047	Pin	617135			
		Socket	617035			
12	UT.085-RG405	Pin	617160		282549004 (M81969/14-04)	Plastic
		Socket	617060			
5	RG58-RG141	Pin	617101001	617101	282946 (M81969/28-01)	Metal
		Socket	617001001	617001		
	RG142 - RG400	Pin	617102001	617102		
		Socket	617002001	617002		
	RG174-RG316-RG188-RG178DS NEXAN 10036442 75 Ohms	Pin	617103001	617103		
		Socket	617003001	617003		
	RG178-RG196	Pin	617104001	617104		
		Socket	617004001	617004		
	RG180 PAN6422XZ ANSE063WGH 96 Ohms	Pin	617105001	617105		
		Socket	617005001	617005		

Contacts

TWINAX & TRIAX CRIMP CONTACTS

CONTACT SIZE	CABLE TYPE	TYPE	ENVIRONMENTAL PART NUMBER	NON-ENVIRONMENTAL PART NUMBER	INS/EXT TOOL	MATERIAL OF TOOL
12 Triax	ECS0700	Pin	617190010		282549004 (M81969/14-04)	Plastic
		Socket	617090010			
	M17/176-00002	Pin	617190012			
		Socket	617090012			
8 Triax	TENSOLITE 24463/9PO25X-2 100 Ohms	Pin	617165021	617165020	282549001	Metal
		Socket	617065021	617065020		
	WHITMOR W2675-1575	Pin	617165	617165001		
		Socket	617065	617065001		
8 Twinax	ABS0386WF24 & TYCO 1726A1424A	Pin	617165011	620165010	282549001	Metal
		Socket	617065011	620065010		
5 Triax	PAN6421ZA002 77 Ohms M17/176-00002 EN3375-003 Raychem 106113 77 Ohms	Pin	617150001	617150	282946 (M81969/28-01)	Metal
		Socket	617050001	617050		
	TENSOLITE 24473/03159X 124 Ohms	Pin	617152001	617152		
		Socket	617052001	617052		

Contacts

QUADRAX & BMA CRIMP CONTACTS

QUADRAX CONTACTS

The Quadrax contact offer is compliant with Arinc 600 and EN3155-072 and EN3155-073 standards.

ENVIRONMENTAL QUADRAX

CONTACT SIZE	CABLE TYPE	TYPE	ENVIRONMENTAL PART NUMBER	EXTRACTION TOOL IN METAL
8	Ethernet Cable ABS0972 and ABS1503	Pin	617175011	282549001
		Socket	617075011	
	TENSOLITE NF24Q100	Pin	617175051	
		Socket	617075051	
	TENSOLITE NF26Q100/JSF Y18	Pin	617175053	
		Socket	617075053	
	TENSOLITE NF22Q100	Pin	617175041	
		Socket	617075041	

NON-ENVIRONMENTAL QUADRAX

CONTACT SIZE	CABLE TYPE	TYPE	NON-ENVIROMNMENTAL PART NUMBER	COMPATIBLE SEALING BOOT PART NUMBER	EXTRACTION TOOL IN METAL
8	Ethernet Cable ABS0972 and ABS1503	Pin	617175012	617939003	282549001
		Socket	620075010		
	TENSOLITE NF24Q100	Pin	617175052		
		Socket	620075050		
	TENSOLITE NF26Q100/JSF Y18	Pin	617175054	617939005	
		Socket	620075021		
	TENSOLITE NF22Q100	Pin	617175040	617939003	
		Socket	620075040		

BMA CONTACTS

Extraction tool **282549001** is used for size 8 BMA contacts.
Environmental BMA contacts are all provided with sealing boots.

CONTACT SIZE	CABLE TYPE	CONNECTOR TYPE	ENVIRONMENTAL PART NUMBER	NON-ENVIRONMENTAL PART NUMBER	FREQUENCY RANGE	MAX VSWR	INSERTION LOSS
8	SHF5 - SHF5M [1]	Pin	617171011	617171010	DC-18 GHz	1.35	0.13 dB at Max Frequency (18 GHz)
	RG142	Pin	617171021	617171020	DC-12.4 GHz	1.35	0.11 dB at Max Frequency (12.4 GHz)
	SHF2.4M [1]/UT.085/ Harbour SS405/ Times Tflex405	Pin	617171031	617171030	DC-18 GHz	1.35	0.13 dB at Max Frequency (18 GHz)
	SHF5 - SHF5M [1]	Socket	617071011	617071010	DC-18 GHz	1.35	0.13 dB at Max Frequency (18 GHz)
	RG142	Socket	617071021	617071020	DC-12.4 GHz	1.35	0.11 dB at Max Frequency (12.4 GHz)
	SHF3 [1]	Socket	617071041	617071040	DC-18 GHz	1.35	0.13 dB at Max Frequency (18 GHz)

Notes

1. BMA contacts which can accommodate SHF cables require a termination by Radiall.

Contacts

LUXCIS® FIBER OPTIC CONTACTS

The LuxCis® product range is a proven, flexible fiber optic interconnect solution offering high-speed communication in aerospace and other harsh environments.

OPTICAL PERFORMANCE

	MULTIMODE (PC) 850/1300 Nm	SINGLEMODE (UPC) 1310/1550 Nm
Insertion Loss (IL) Mean (IEC 61300-3-4 Method B)	0.1 dB	0.15 dB
Return Loss (RL) (IEC 61300-3-6)	> 20 dB	> 50 dB

MECHANICAL & ENVIRONMENTAL CHARACTERISTICS

	STANDARD	PERFORMANCE
Thermal Cycling	SAE AS 13441 Method 1003.1	-55 °C/+125 °C (Cable Dependant)
Temperature Endurance	TIA/EIA 455-4	1,000 h at 125 °C (Cable Dependant)
Vibration	TIA/EIA 455-11	27 g
Shock	TIA/EIA 455-14	50 g, 11 ms
Durability	TIA/EIA 364-09	500 Cycles [1]
Maintenance	SAE AS 13441 Method 2002.1	10 Cycles
Cable Retention 1.8 mm Diameter 900 µm Diameter	SAE AS 13441 Method 2009.1	68 N 7 N
Humidity	TIA/EIA 455-5	10 Cycles/24 h 90% RH -25 °C/+65 °C

LUXCIS® CONTACT PART NUMBERING SYSTEM

F7250

LUXCIS® SERIES

FERRULE TYPE
00: PC ferrule for single-mode fiber
03: PC ferrule for 50/125 or 62.5/125 µm multi-mode fiber
04: PC ferrule for 100/40 um multi-mode fiber
05: PC ferrule for 200/230 um multi-mode fiber
50: APC ferrule for single-mode fiber

CABLE TYPE AND DIAMETER
118: 900 µm cable
318: 1.2 mm cable with strengthening members, tight structure
419: 1.6 to 2.2 mm cable, loose structure
519: 1.6 to 2.2 mm cable, tight structure

The sealing plug F718 211 200 is specifically designed to fill the unused LuxCis® Arinc 801 cavities.

Notes
1. Mating cycles are dependant on the connector series.
Radiall can support you with your cable and harness assemblies.
Please contact your sales representative.

Contacts

SIGNAL PC TAIL CONTACTS

Selection Table for Straight PC Tail Contacts

Contact termination designations are a combination of 2 letters:

- The first letter characterizes the contact plating
  R = Pure-tin (RoHS); Z = Tin lead; Y = Gold
- The second letter characterizes the length of the PC tail: A to D
  The exact lengths can be found on the assembly kit sections

CONTACT TERMINATION	CONTACT TYPE	SIZE 22	SIZE 20	SIZE 16	SIZE 12	SIZE 8	SIZE 5
RA	Pin	617205510	617222514	617242510	617259505	617291501	617289506
	Socket	617305500	617322505	617342510	617359505	617391501	617389506
YA	Pin	617205010	617222014	617242010	617259005	617291001	617289006
	Socket	617305	617322005	617342010	617359005	617391001	617389006
ZA	Pin	617205710	617222714	617242710	617259705	617291701	617289706
	Socket	617305700	617322705	617342710	617359705	617391701	617389706
RB	Pin	617205501	617222512	617242508	617259506	617291503	617289504
	Socket	617305501	617322506	617342511	617359506	617391503	617389504
YB	Pin	617205001	617222012	617242008	617259006	617291003	617289004
	Socket	617305001	617322006	617342011	617359006	617391003	617389004
ZB	Pin	617205701	617222712	617242708	617259706	617291703	617289704
	Socket	617305701	617322706	617342711	617359706	617391703	617389704
RC	Pin	617205515	617222513	617242517	617259503	617291504	617289503
	Socket	617305508	617322507	617342513	617359503	617391504	617389503
YC	Pin	617205015	617222013	617242017	617259003	617291004	617289003
	Socket	617305008	617322007	617342013	617359003	617391004	617389003
ZC	Pin	617205715	617222713	617242717	617259703	617291704	617289703
	Socket	617305708	617322707	617342713	617359703	617391704	617389703
RD	Pin	617205509	617222510	617242509	617259507	617291505	617289507
	Socket	617305502	617322509	617342515	617359507	617391505	617389507
YD	Pin	617205009	617222010	617242009	617259007	617291005	617289007
	Socket	617305002	617322009	617342015	617359007	617391005	617389007
ZD	Pin	617205709	617222710	617242709	617259707	617291705	617289707
	Socket	617305702	617322709	617342715	617359707	617391705	617389707
Ins/Ext. Tool		282522 M81969/14-01	282522001 M81969/39-01	282515 M81969/14-03	282549004 M81969/14-04	282549001 M81969/28-03	282946 M81969/28-01

Contacts

QUADRAX SIZE 8 PC TAIL CONTACTS

Selection Table for Straight PC Tail Contacts

Contact termination designations are a combination of 2 letters:

- The first letter characterizes the contact plating
  R = Pure-tin (RoHS); Z = Tin lead; Y = Gold
- The second letter characterizes the length: A to D. The exact dimensions of the lengths can be found on the assembly kit sections

CONTACT TERMINATION	CONTACT TYPE	PART NUMBERS
RA	Pin	617177512
	Socket	617077512
YA	Pin	617177012
	Socket	617077012
ZA	Pin	617177712
	Socket	617077712
RB	Pin	617177501
	Socket	617077502
YB	Pin	617177001
	Socket	617077002
ZB	Pin	617177701
	Socket	617077702
RC	Pin	617177508
	Socket	617077508
YC	Pin	617177008
	Socket	617077008
ZC	Pin	617177708
	Socket	617077708
RD	Pin	617177513
	Socket	617077513
YD	Pin	617177013
	Socket	617077013
ZD	Pin	617177713
	Socket	617077713
Ext. Tool		282549001

Contacts

FILLER PLUGS

Filler plugs are dedicated to non-environmental insert cavities. The arrows show the direction which you have to insert the plug.

SIZE	CONTACT CAVITY VERSION	INS/EXT	COLOR	PART NUMBER	DRAWING
22	For Pin & Socket	Rear/Rear	Black	620920	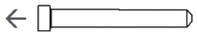
20			White	610941	
16 For Electrical Cavity			Blue	620922	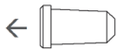
16 For Optical Cavity			Green	F718211200	
12			Yellow	620923	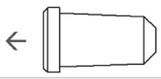
8	Pin		Nickel	619953	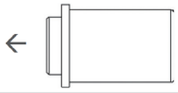
	Socket			619950	
5	Pin		White	617930	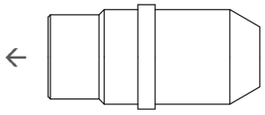
	Socket			617931	

SEALING PLUGS

Sealing plugs are dedicated to environmental insert cavities.

SIZE	CONTACT CAVITY VERSION	INS/EXT	COLOR	PART NUMBER	DRAWING
22	For Pin & Socket	Rear/ Rear	Black	616910	
20			Red	616911	
16 For Electrical Cavity			Green	616912	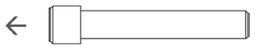
16 For Optical Cavity				F718211200	
12			Orange	616913	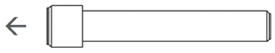
8			Red	618915	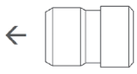
5				616914013	

Disconnect Application

EPXA1 PRODUCT OVERVIEW

Detailed view of receptacle and plug with accessories for the EPXA1 connector:

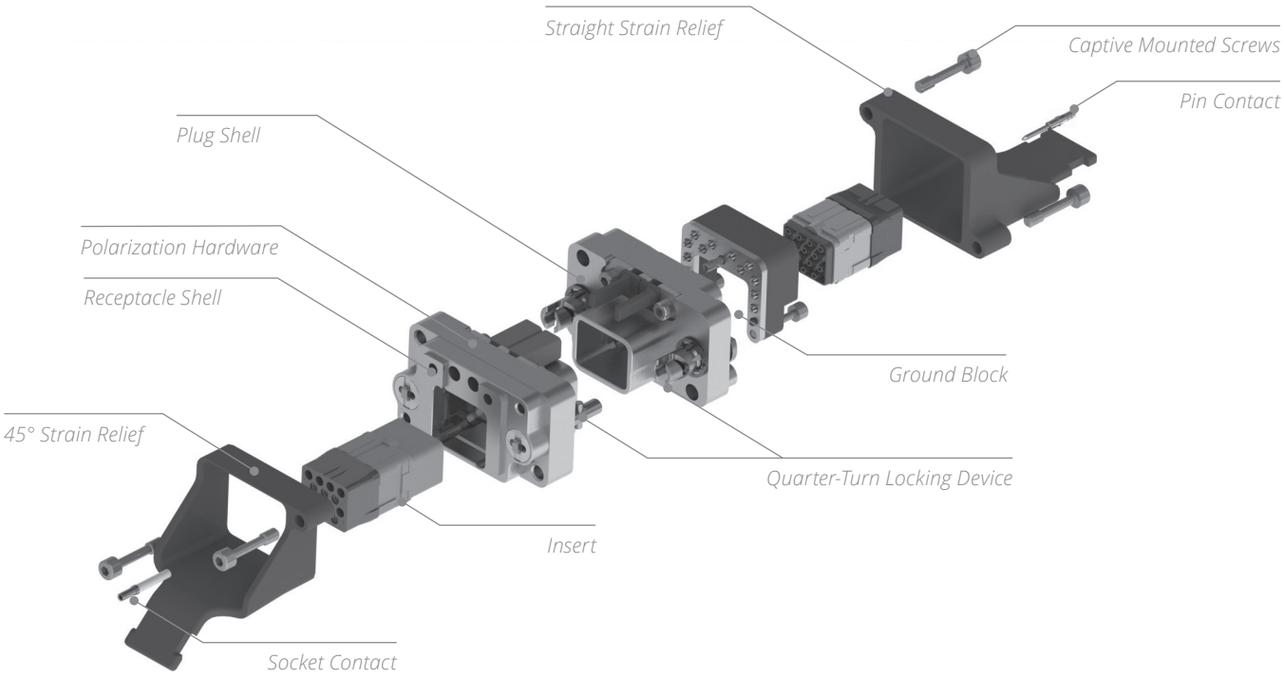

Disconnect Application

EPXB1 PRODUCT OVERVIEW

Detailed view of receptacle and plug with accessories for the EPXB1 connector:

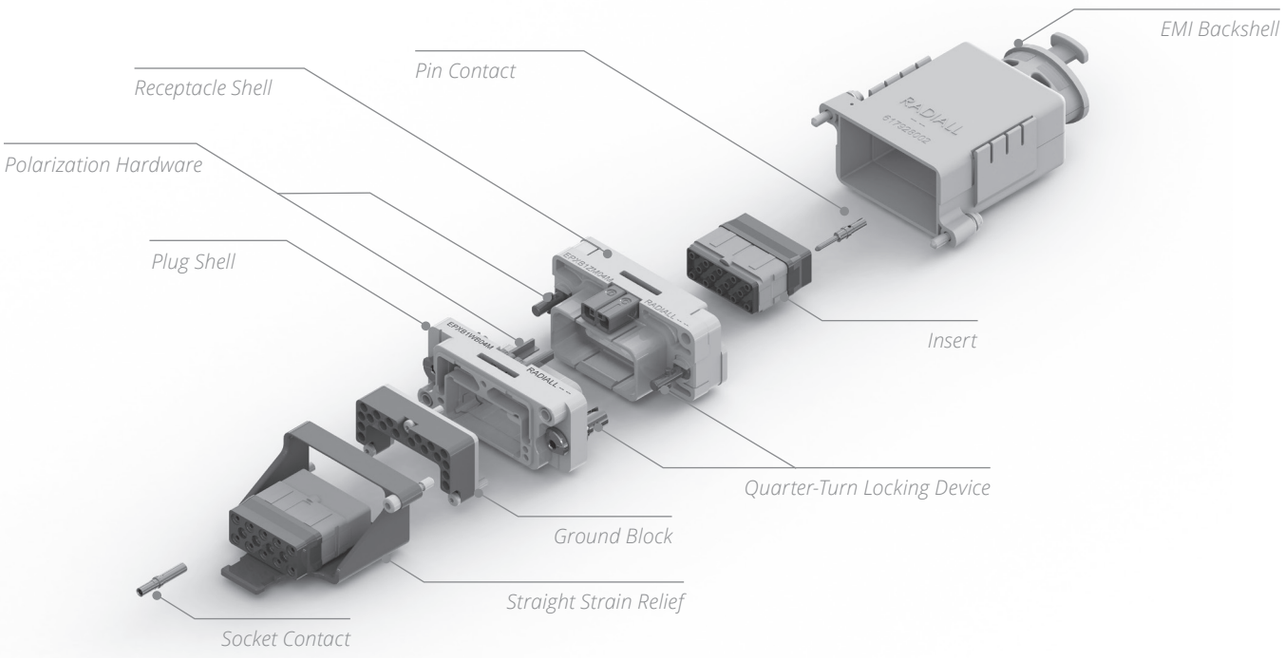

Disconnect Application

HOW TO ORDER EPXA1 & EPXB1 SHELL

EPX

SERIES PREFIX

SHELL SIZE
A1: Single small cavity shell
B1: Single large cavity shell

SHELL STYLE
P: Plug
R: Receptacle
W: Plug with ground block
Z: Receptacle with ground block

SHELL MOUNTING OPTION [1]
B: Plug without mounting holes
M: Receptacle with two mounting holes, 6-32 UNC for rear panel [2]

LOCKING DEVICE
0: Quarter-turn fastener

POLARIZATION CODE [3]
4: Shell delivered with polarizing hardware unassembled
5: Shell delivered with no polarizing hardware

SHELL CLASS
M: Nickel-plated composite for EPXB1
K: Nickel-plated aluminium for EPXB1 (mateable with version M composite shell)
N: Nickel-plated aluminium for EPXA1

GROUND BLOCK

Radiall provides a unique patented feature by integrating a ground block directly on the shell. This option permits very short ground terminations.

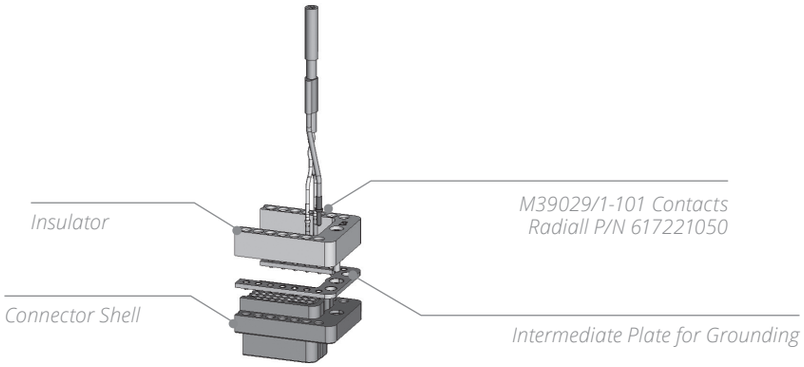

Notes
1. Recommended locking torque: 1.6 Nm (14.16 in.-lb) for metallic shell and 1.1 Nm (9.73 in.-lb) max for composite shell.
2. Self-locking mounting holes are designed for rear panel mounting.
3. Please see page 1-28 on how to use the polarization device.

Disconnect Application

HOW TO ORDER EPXA & EPXB1 ASSEMBLY KIT

Assembly kit is delivered fully assembled including shell with insert mounted, with or without contacts, according to the selection.

Tips to help you in your selection:

- You are free to use either pin or socket inserts in EPXA and EPXB1 plug or receptacles.
- Crimp contacts can be delivered with a kit; check which contacts would be included on page 1-10.
- If PC tail are selected, then all cavities including signal, power and quadrax are populated. Size 5 coax cavities are not populated.
- If PC tail contacts are needed, remember that they are available as pin straight PC tail contacts in receptacles only.

SHELL SELECTION PART

EPX

SERIES PREFIX

SHELL SIZE
A1: Single small cavity shell
B1: Single large cavity shell

SHELL STYLE
P: Plug
R: Receptacle
W: Plug with ground block
Z: Receptacle with ground block

POLARIZATION CODE
4: Shell delivered with polarizing hardware unassembled
5: Shell delivered with no polarizing hardware

SHELL CLASS
M: Nickel-plated composite for EPXB1
K: Nickel-plated aluminium for EPXB1 (mateable with version M composite shell)
N: Nickel-plated aluminium for EPXA

INSERT SELECTION PART

INSERT CLASS
E: Environmental
N: Non-environmental (no rear grommet, no interfacial seal)
H: Non-environmental insert with a rear grommet, available for pin insert only (recommended for crimp contact)
T: Non-environmental insert with an interfacial seal, available for pin insert only (recommended for PC tail contact)

INSERT CODE
Refer to page 1-10 to select insert code

CONTACTS TERMINATION
XS: Socket insert without contacts [1]
XP: Pin insert without contacts [1]
SS: Socket insert with crimp contacts [1]
SP: Pin insert with crimp contacts [1]

YA: Gold PC tail contacts length A [2]
ZA: Tin-lead PC tail contacts length A [2]
RA: Pure tin (RoHS) PC tail contacts length A [2]

Notes
1. These contacts are delivered uninstalled
2. Refer to page 1-29 to select PC tail contacts for receptacle

Disconnect Application

POLARIZATION CODE FOR EPXA1 & B1

Caution: Read the polarization code from left to right, the same way the part number marking can be read on the connector.

	PLUG	RECEPTACLE
EPXA1	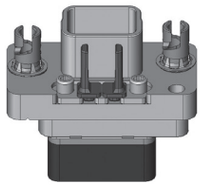	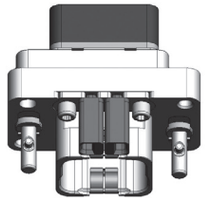
EPXB1	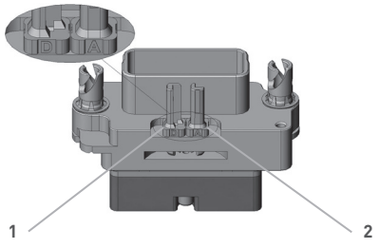	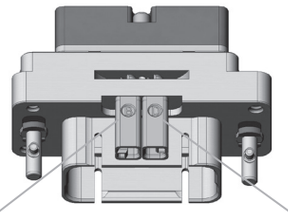
Coding Device	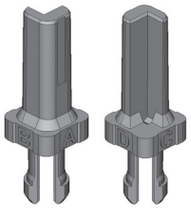 View A and B View C and D	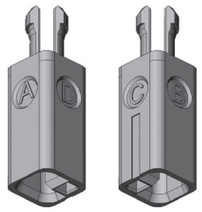 View A and D View C and B

There are 16 possible codings:

KEY POSITION 1	A	A	A	A	B	B	B	B	C	C	C	C	D	D	D	D
KEY POSITION 2	A	B	C	D	A	B	C	D	A	B	C	D	A	B	C	D

Disconnect Application

CONTACT TERMINATION FOR EPXB1

Aluminium and composite shell versions.

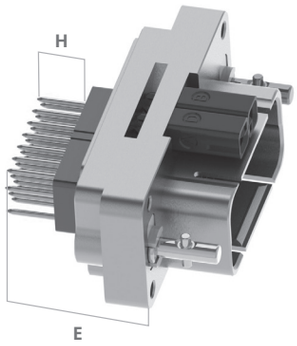

STRAIGHT PC TAIL CONTACT TERMINATION

MIN LENGTH E MM (INCH)	MIN LENGTH H MM (INCH)	GOLD	TIN-LEAD	PURE TIN (ROHS)
16.20 (0.637) [1]	-	YA	ZA	RA
19.40 (0.763) [1]	-	YB	ZB	RB
21.25 (0.836) [1]	-	YC	ZC	RC
25.20 (0.992)	5.40 (0.212)	YD	ZD	RD

Notes

1. These PC tail lengths are not compatible with EPXBE and EPXBH inserts.

Disconnect Application

EPXA1 SHELL DIMENSIONS

WITHOUT GROUND BLOCK

Receptacle *Plug*

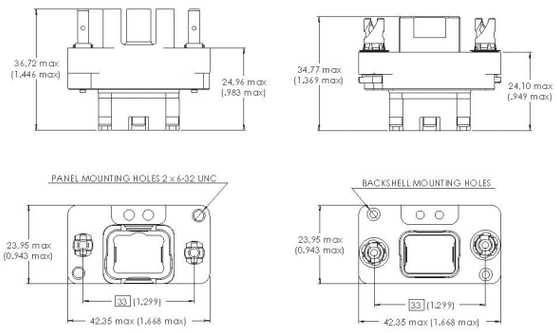

WITHOUT GROUND BLOCK

Receptacle *Plug*

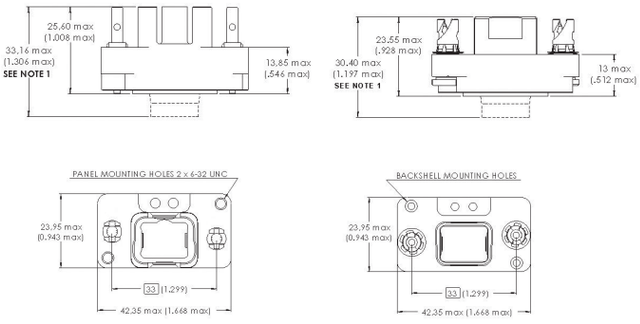

SINGLE PANEL CUT-OUT [2]

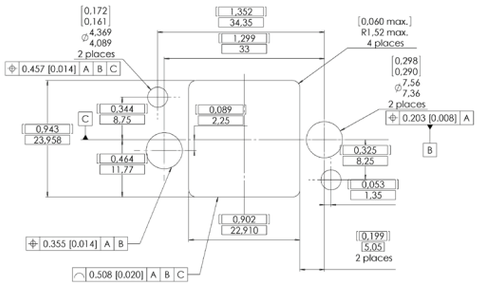

MULTIPLE PANEL CUT-OUT [2]

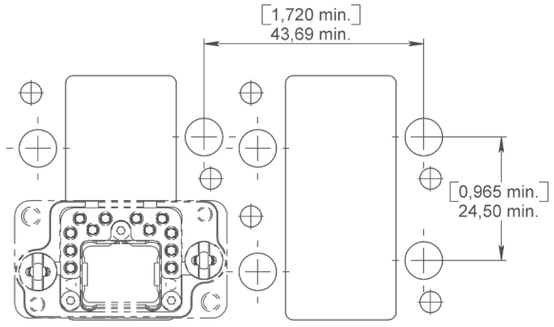

EPXA1 SHELL WEIGHTS

Weights include the shell with polarization hardware.

EPXA1	SHELL STYLE	WEIGHT
CLASS N	P	27.0 g (0.95 oz)
	R	33.0 g (1.16 oz)
	W	35.0 g (1.23 oz)
	Z	41.0 g (1.45 oz)

Notes

1. Maximum dimension for insert with grommets.
For insert without grommet maximum dimensions will be for receptacle 25.55 mm (1.006 in.) and for the plug 23.52 mm (0.926 in.).
2. Rear mounting side view with key post oriented to the upper side.

Disconnect Application

EPXB1 SHELL DIMENSIONS

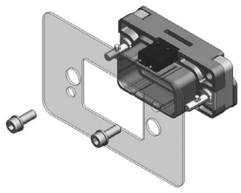

WITHOUT GROUND BLOCK

Receptacle *Plug*

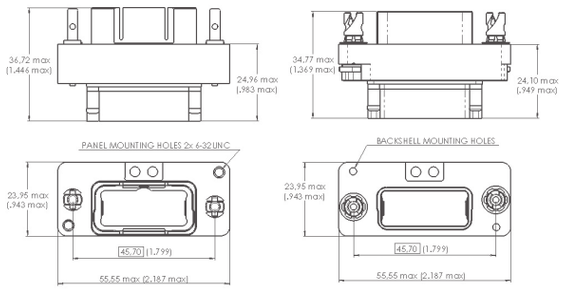

WITHOUT GROUND BLOCK

Receptacle *Plug*

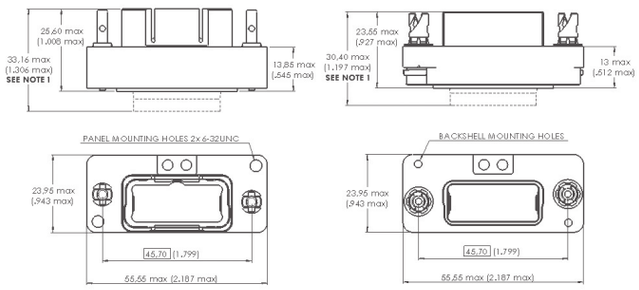

SINGLE PANEL CUT-OUT [2]

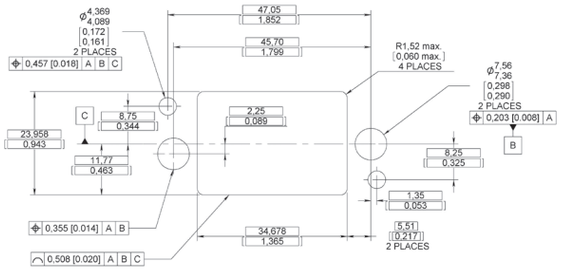

MULTIPLE PANEL CUT-OUT [2]

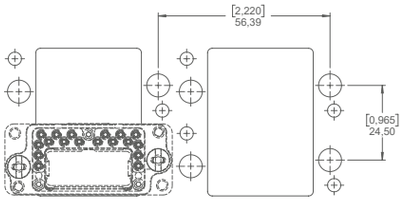

EPXB1 SHELL WEIGHTS

Weights include the shell with polarization hardware.

EPXB1	SHELL STYLE	WEIGHT
CLASS K	P	27.0 g (0.95 oz)
	R	33.0 g (1.16 oz)
	W	37.0 g (1.31 oz)
	Z	43.0 g (1.52 oz)
CLASS M	P	25.0 g (0.88 oz)
	R	33.0 g (1.16 oz)
	W	35.0 g (1.23 oz)
	Z	43.0 g (1.52 oz)

Notes

1. *Maximum dimension for insert with grommet. For insert without grommet: Insert is flush to the shell. Maximum dimension for the receptacle is 25.55 mm (1.006 in.) and for the plug is 23.52 mm (0.926 in.). For insert with optical contacts: the maximum dimension for the receptacle is 38.70 mm (1.524 in.) and the plug is 36.00 mm (1.418 in.).*
2. *Rear mounting side view with polarization hardware oriented to the upper side.*

Disconnect Application

EPXA1 & EPXB1 SPARE PARTS

SPARE PARTS & DUST CAPS

	PART NUMBER		DESCRIPTION
	EPXA	EPXB1	
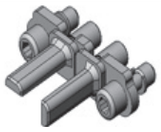	617980032	-	Polarization Kit for Plug Connector
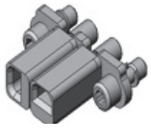	617980033	-	Polarization Kit for Receptacle Connector
	-	617980030	Polarization Post
	-	617980031	Polarization Key
	617954006	617954008	Dust Cap for Plug Shell (Pink Color)
	617954007	617954009	Dust Cap for Receptacle Shell (Pink Color)
	617954044	617954034	ESD Dust Cap for Plug Shell (Black Color)
	617954045	617954028	ESD Dust Cap for Receptacle Shell (Black Color)
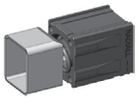	617929033	-	Sealing Inserts for Fly Away Applications: Mateable with Pin Insert
	-	617929023	
	617929032	-	Sealing Inserts for Fly Away Applications: Mateable with Socket Insert
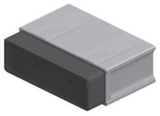	-	617929022	

Disconnect Application

EPXA1 & EPXB1 ACCESSORIES

STRAIN RELIEFS & EMI BACKSHELLS

	PART NUMBER		DESCRIPTION
	EPXA1	EPXB1	
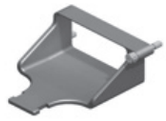	617921030	617921029	Straight Strain Relief (Composite)
	617921032	617921031	45° Strain Relief (Composite)
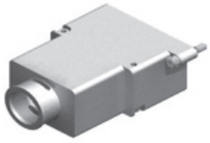	-	617924016	Straight EMI Backshell (Nickel-Plated Aluminium)
	-	617928002	Straight EMI Backshell (Nickel-Plated Composite)
	-	617921044	Fiber Optic Backshell (Composite)

Notes

For mounting instructions, please contact Radiall.

Disconnect Application

EPXB2 CONNECTORS

Radiall's EPXB2 disconnect connectors have been widely used in the aerospace industry for more than 10 years. Meant to be used in cable-to-cable and PCB-to-cable applications, EPXB2 connectors exceed civil aerospace market expectations in terms of high density, quick installation, and cost and weight savings.

Standardized by EN4644 European standard, Radiall's EPX® has been recognized as the leading rectangular modular connector and used in major commercial and business jet aircrafts. EPXB2 connectors are designed to cover any applications including:

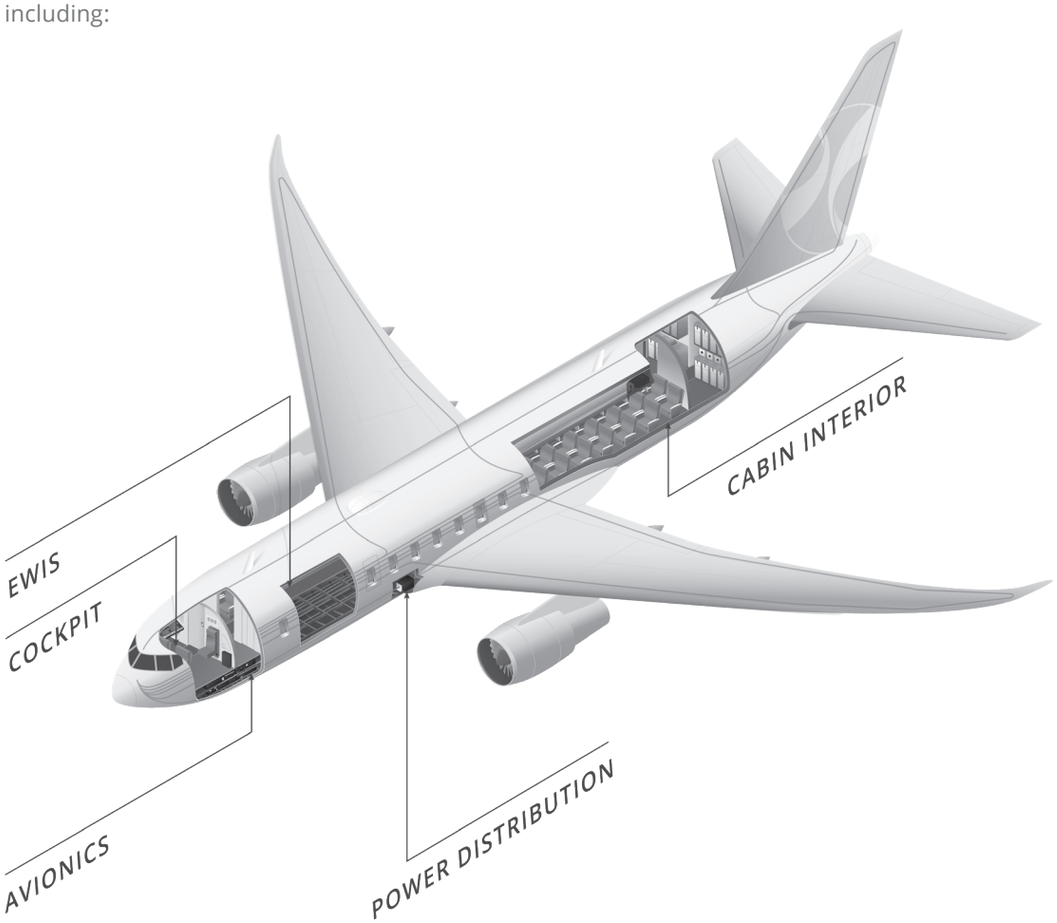

EWIS
EPXB2 provides easy maintenance and high reliability, which are key characteristics of EWIS environments.

CABIN INTERIOR
EPXB2 combines high speed data with space savings to serve the latest generations of cabin systems.

COCKPIT
EPXB2 offers simplified and intuitive installation for Fiber Optic and signal connections that are critical in cockpit design.

AVIONICS
EPXB2's compactness, weight and robust design efficiently support avionics systems needs.

POWER DISTRIBUTION
EPXB2's stackable and segregated features make it the perfect solution for power distribution.

EPXB2 PRODUCT OVERVIEW

Detailed view of receptacle and plug with accessories for the EPXB2 disconnect connector:

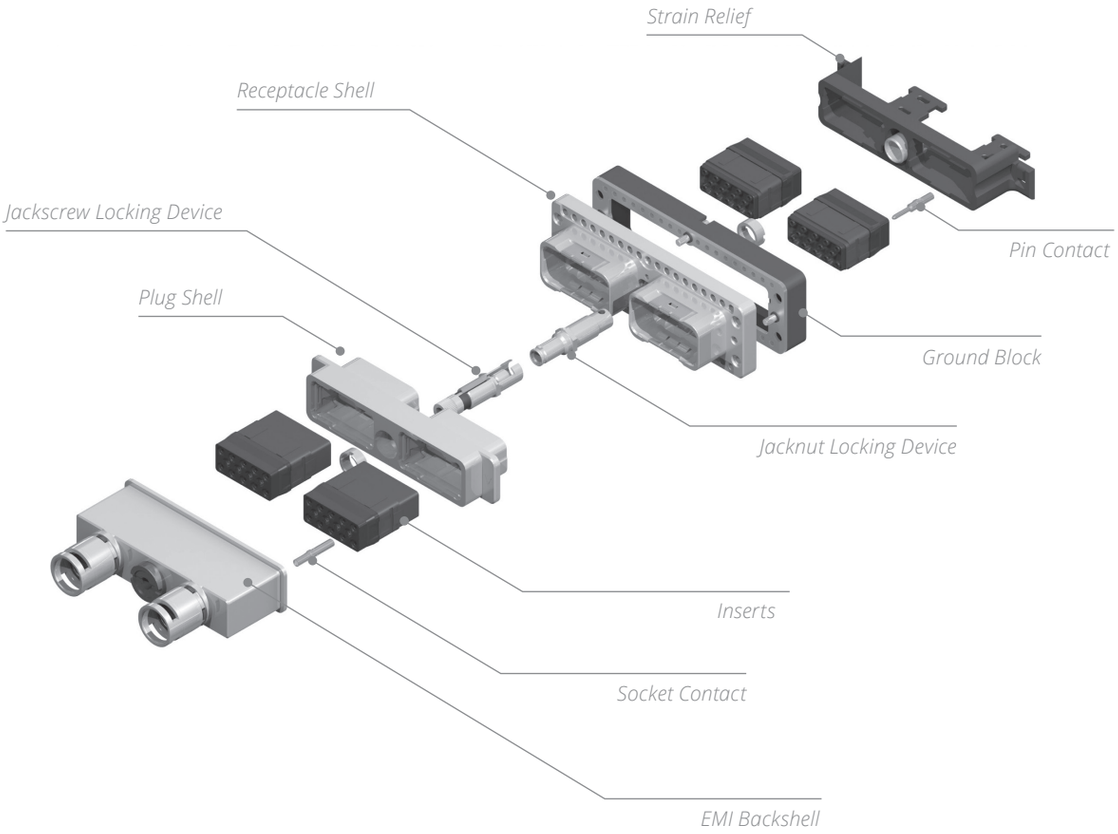

Disconnect Application

EPXB2 RANGE OVERVIEW

Modular and flexible, EPXB2 answers all disconnect connecting needs with the use of a limited number of components. With a large variety of shells and one range of inserts, contacts and accessories, EPXB2 range is completely expandable and fits to your exact needs. You can mix and match solutions to build your connector with:

SHELL CLASSES - (ALL NICKEL-PLATED)

N	M	J
Aluminium	*Composite*	*Weight Optimized Aluminium*

SHELL STYLES

Defining connector types (plug or receptacle) and their key features.

Classic EPXB2	*Ground Block*	*Flange*	*Bulkhead*	*iEPX*

EPXB2 GALAXY

Plugs

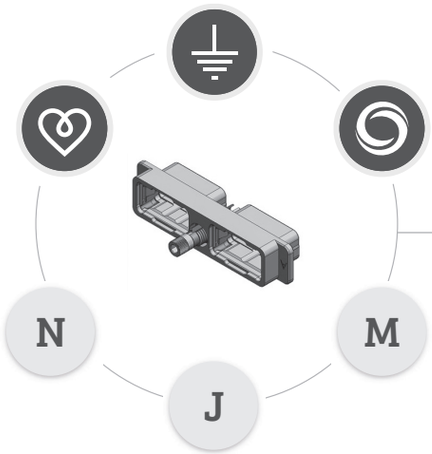

Receptacles

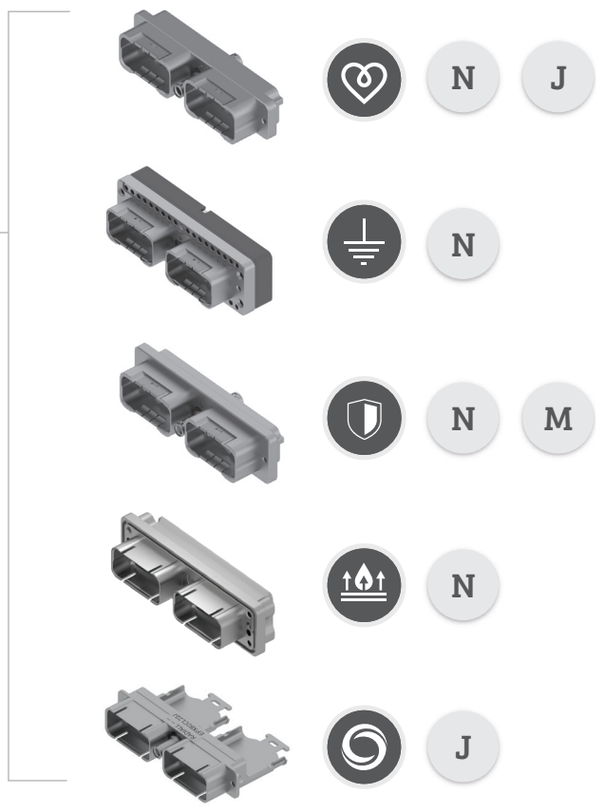

Disconnect Application

EPXB2 LATEST INNOVATIONS

iEPX

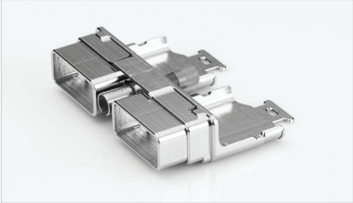

Radiall expands the EPX® series by offering iEPX, a new weight optimized EPXB2 shell designed to be used in disconnect panel applications. With an integrated strain relief and EMI backshell to press-in, iEPX provides EMI shielding while reducing cost and weight.

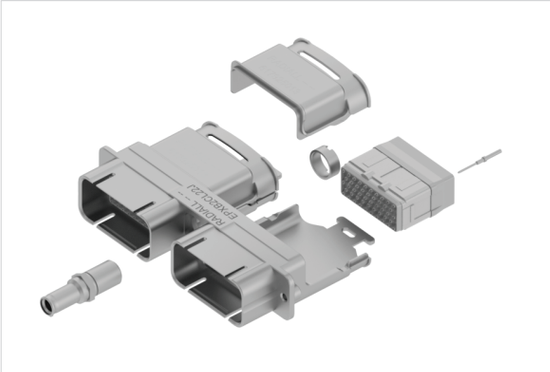

FEATURES & BENEFITS:

- Quick and easy to terminate
- Lightweight
- Prevents FOD
- Cable-to-cable connection
- Integrated strain relief

MIX & MATCH:

- Fully intermateable with all EPXB2 plugs and receptacles.
- Modular and comprehensive range: iEPX uses all contacts and inserts from EPX® range.

EPX® BULKHEAD

Radiall's EPXB2 Bulkhead receptacle is a perfect solution for disconnect panel sealing applications. Combining EPX® proven technology with Bulkhead functionality, EPXB2 Bulkhead modular connectors provide effective panel sealing with a user friendly and cost saving approach.

With EPXB Bulkhead pin insert range, Bulkhead receptacle provides permanent sealing between two zones with different environmental conditions.

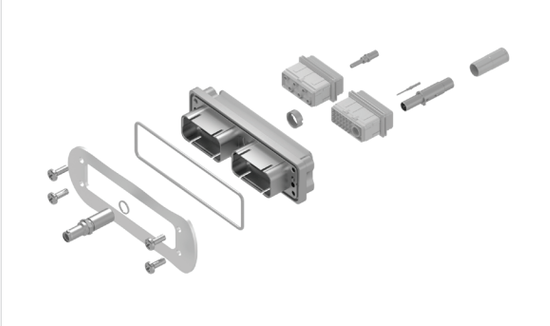

FEATURES & BENEFITS:

- Modular
- Competitive offer
- Optimized and mature design
- Easy and economical integration in the BOM
- PCB-to-cable or cable-to-cable connection

MIX & MATCH:

- Fully intermateable with all EPXB2 plugs
- Uses EPX® broad range of accessories and contacts including signal, power, quadrax and fiber optics

Disconnect Application

HOW TO ORDER EPXB2 SHELL

EPX

SERIES PREFIX

SHELL SIZE
B2: Two cavity shell

SHELL STYLE
For option compatibility, see the table below.
L: Receptacle with flange
H: Classic receptacle
Z: Receptacle with ground block
R: Receptacle without ground fingers
C: iEPX receptacle with integrated strain-relief
P: Classic plug
W: Plug with ground block
D: iEPX plug with integrated strain-relief

SHELL PLATING
N: Nickel-plated aluminium
M: Nickel-plated composite
J: Nickel-plated, weight-optimized aluminium

POLARIZATION CODE [2]
2: Polarizing device A to F delivered unassembled
3: Polarizing device N to Z delivered unassembled

LOCKING & POLARIZATION DEVICE [1]
1: Jackscrew
2: Jacknut
3: Without locking device

SHELL MOUNTING
A: Panel rear mounted connector with 4 × 6-32 mounting holes
B: No mounting holes
D: Connector with 2 × Ø 3.10 mm thru holes
F: Panel rear mounted connector with 2 × 6-32 mounting holes
L: Panel rear mounted connector with 2 × 4-40 mounting holes

AVAILABLE SHELL MOUNTING

	SHELL STYLE	A *(4 × 6.32 UNC)*	B *(no holes)*	D *(2 × Ø 3.10 mm)*	F *(2 × 6.32 UNC)*	L *(2 × 4.40 UNC)*
Class N *(Aluminium)*	L	-	-	✓	✓	✓
	H	-	✓	✓	✓	✓
	Z	✓	✓	-	-	-
	R	✓	-	-	-	-
	P	-	✓	✓	-	✓
	W	✓	✓	-	-	-
	B	✓		-	-	-
Class J *(Weight-Optimized Aluminium)*	H	-	-	-	-	✓
	C	-	-	-	-	✓
	P	-	✓	-	-	-
	D	-	✓	-	-	-
Class M *(Composite)*	L	-	-	✓	-	✓
	P	-	✓	✓	-	✓

Notes
1. Jackscrew/Jacknut can be mounted on either plug or receptacle shell. However, the standard options are:
- Jackscrew for plug shells
- Jacknut for receptacle shells
2. Please see page 1-40 for how to use the the polarization coding.

Disconnect Application

HOW TO ORDER EPXB2 ASSEMBLY KIT

Assembly kits are delivered fully assembled including shell with inserts mounted, with or without contacts, according to the selection. When selecting your insert codes, do not forget to place them in the order you want them assembled. Locking and polarizing devices are delivered uninstalled.

Tips to help you in your selection:

- You are free to use either pin or socket inserts in EPXB plug or receptacle.
- Crimp contacts can be delivered with a kit. Check which contacts will be included on page 1-10.
- PC tail contacts can also be delivered with a kit. Remember that only straight pin PC tail contacts are available, and in receptacle only.
- If PC tail contacts are selected, then all cavities including signal, power and quadrax are populated. Size 5 coax cavities are not populated.

All connector inserts will use the same insert class and the same contact termination.

EPX

SHELL SELECTION PART

SERIES PREFIX

SHELL SIZE
B2: Two cavity shell

SHELL STYLE
For option compatibly, see table on page 1-38
L: Receptacle with flange
H: Classic receptacle
Z: Receptacle with ground block
R: Receptacle without ground fingers
B: Bulkhead receptacle (bulkhead pin inserts compulsory)
C: iEPX receptacle with integrated strain-relief
P: Classic plug
W: Plug with ground block
D: iEPX plug with integrated strain-relief

SHELL MOUNTING
A: Rear panel mounted connector with 4 × 6-32 mounting holes
B: No mounting holes
D: Connector with 2 × Ø 3.10 mm thru holes
F: Rear panel mounted connector with 2 × 6-32 mounting holes
L: Rear panel mounted connector with 2 × 4-40 mounting holes

POLARIZATION
1: Jackscrew polarizing device A to F
2: Jacknut polarizing device A to F
3: Without locking device
6: Jackscrew polarizing device N to Z
7: Jacknut polarizing device N to Z

SHELL CLASS
N: Nickel-plated aluminium
M: Nickel-plated composite
J: Nickel-plated, weight-optimized aluminium

INSERT SELECTION PART

CONTACTS TERMINATION
XS: Socket insert without contacts
XP: Pin insert without contacts
SS: Socket insert with crimp contacts [1]
SP: Pin insert with crimp contacts [1]
YA: Gold PC tail contacts length A [2] [3]
ZA: Tin-lead PC tail contacts length A [2] [3]
RA: Pure tin (RoHS) PC tail contacts length A [2] [3]

INSERT CODE
Refer to page 1-12 to select insert code

INSERT CLASS
B: Bulkhead insert with interfacial seal and rear grommet, available for pin insert only
E: Environmental
N: Non-environmental
H: Non-environmental insert with a rear grommet, available for pin insert only (recommended for crimp contact)
T: Non-environmental insert with an interfacial seal, available for pin insert only (recommended for PC tail contact)

Notes
1. These contacts are delivered uninstalled
2. Refer to pages 1-41 to select PC tail contacts for receptacle.
3. Not available with iEPX

Disconnect Application

EPXB2 POLARIZATION CODE

As a standard, jackscrews are installed in plugs, and jacknuts are installed in receptacle shells; however, they both can be installed in either plugs and receptacles. The nut can be fixed with your automatic screwdriver and the tool bit we provide (P/N 282664).

Tip: Use the shell reference mark (located at the top of the locking cavity) to choose keying position.

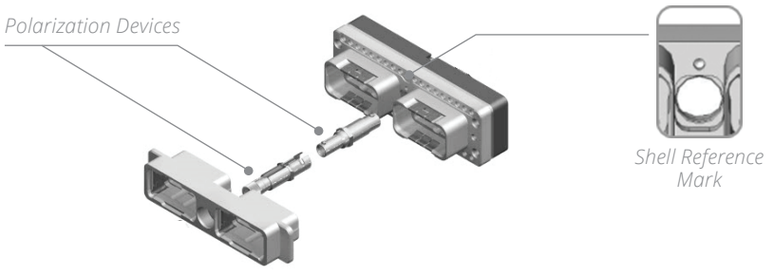

		KEYING POSITION		AVAILABLE AS	
		RECEPTACLE	PLUG	STANDARD	BULKHEAD
Jacknut	From A to F	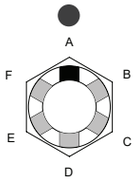	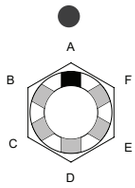	617980029	617980066
	From N to Z	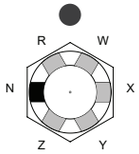	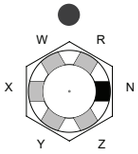	617980028	617980067
	Universal			617980022	N/A
Jackscrew	From A to F	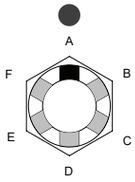	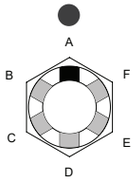	617980012	N/A
	From N to Z	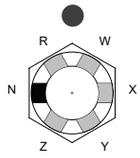	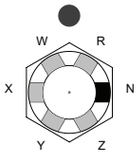	617980013	N/A
	Universal			617980023	N/A

● *Shell Reference Mark*

Disconnect Application

CONTACTS TERMINATION FOR RECEPTACLES

EPXB2 COMPOSITE SHELL

STRAIGHT PC TAIL CONTACT TERMINATION				
MIN LENGTH E MM (INCH)	MIN LENGTH H MM (INCH)	GOLD	TIN-LEAD	PURE TIN (ROHS)
14.20 (0.559) [1]	-	YA	ZA	RA
17.35 (0.683) [1]	-	YB	ZB	RB
19.20 (0.755) [1]	-	YC	ZC	RC
23.10 (0.909)	5.40 (0.212)	YD	ZD	RD

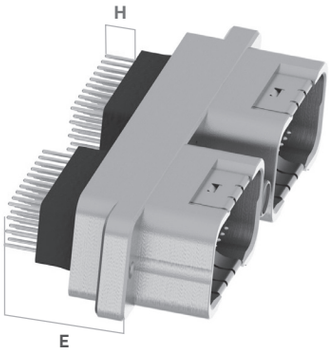

EPXB2 WEIGHT OPTIMIZED ALUMINIUM AND ALUMINIUM SHELL

STRAIGHT PC TAIL CONTACT TERMINATION				
MIN LENGTH E MM (INCH)	MIN LENGTH H MM (INCH)	GOLD	TIN-LEAD	PURE TIN (ROHS)
14.55 (0.572) [1]	-	YA	ZA	RA
17.75 (0.698) [1]	-	YB	ZB	RB
19.55 (0.769) [1]	-	YC	ZC	RC
23.50 (0.925)	5.40 (0.212)	YD	ZD	RD

GROUND BLOCK

Radiall provides a unique patented feature by integrating a ground block directly on the shell. This option permits very short ground terminations.

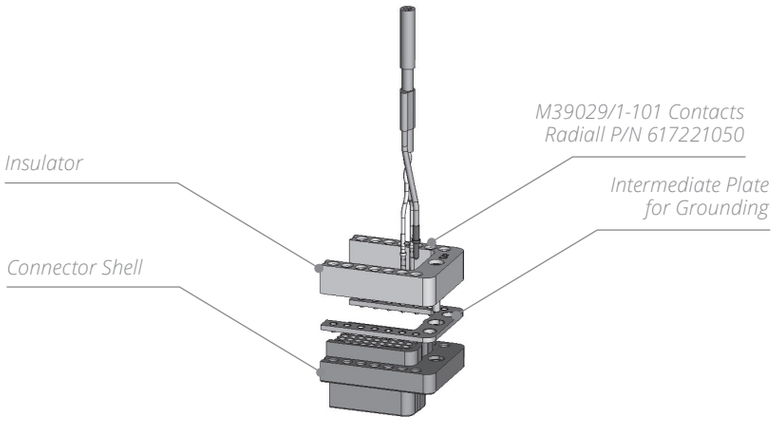

Notes

1. These PC tail lengths are not compatible with EPXBE, EPXBH or EPXBB inserts.

Disconnect Application

EPXB2 ALUMINIUM SHELL DIMENSIONS

CLASS N&J

CLASSIC

Receptacle [HL]

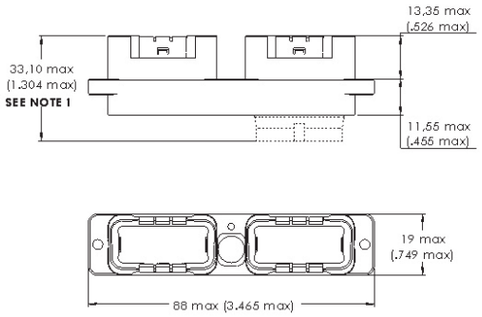

Plug [PB]

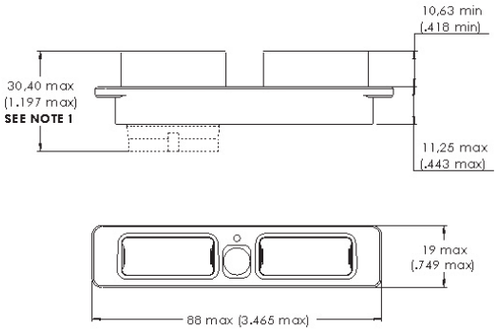

CLASS N

GROUND BLOCK

Receptacle [ZA]

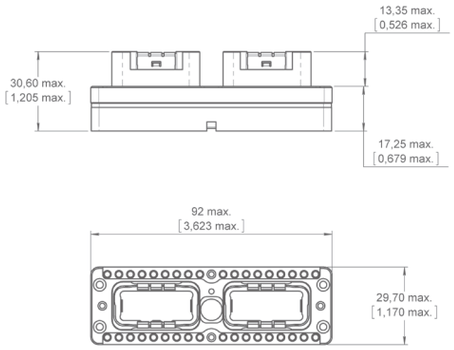

Plug [WA]

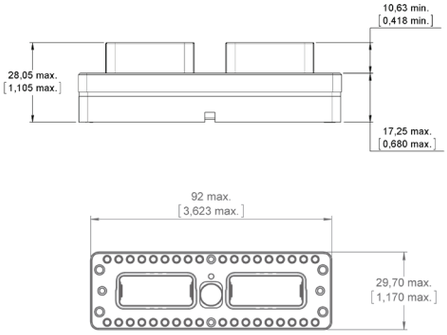

BULKHEAD

Receptacle [BA]

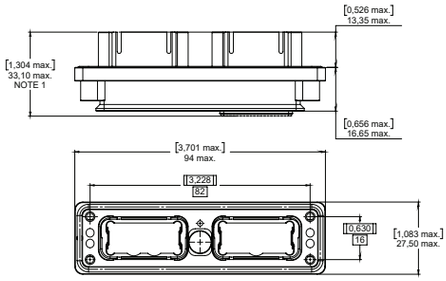

Notes

1. *For insert with grommet: maximum dimension is the one shown in the drawing.*
   For insert without grommet: insert is flush to the shell. Maximum dimension for the receptacle is 25.55 mm (1.006 in.) and for the plug is 23.52 mm (0.926 in.) .
   For insert with optical contacts: the maximum dimension for the receptacle is 38.70 mm (1.524 in.) and for the plug is 36.00 mm (1.418 in.).

Disconnect Application

EPXB2 ALUMINIUM SHELL DIMENSIONS

CLASS J

iEPX

Receptacle [CL]

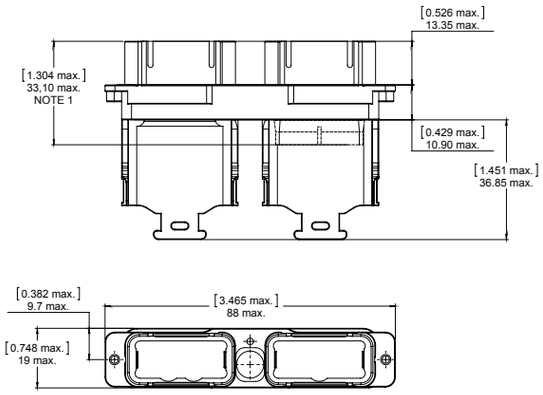

Plug [DB]

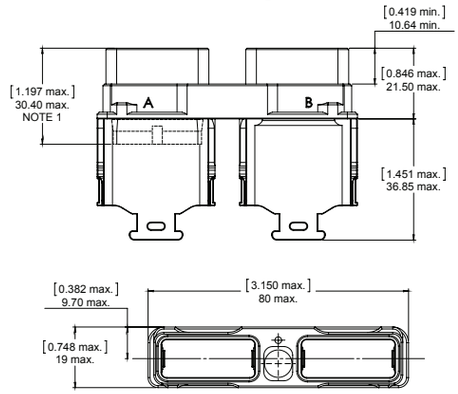

SINGLE PANEL CUT-OUT

CLASS N & J

Shell Mounting Code D, F and L

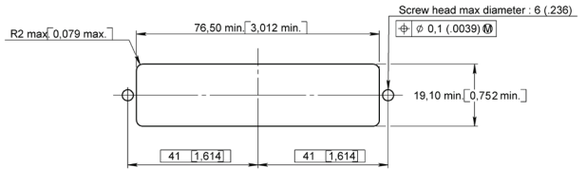

Shell Mounting Code A

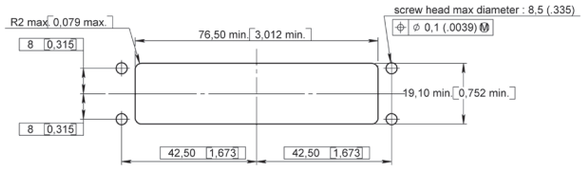

CLASS N - BULKHEAD RECEPTACLE

Shell Mounting Code A

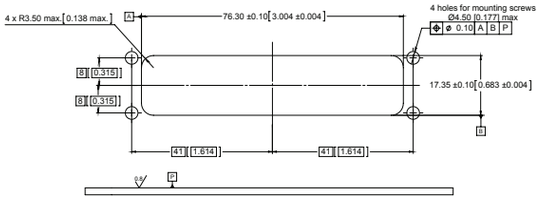

MULTIPLE PANEL CUT-OUT

CLASS N & J

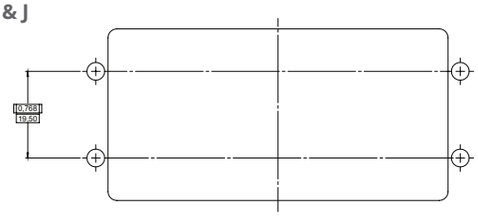

Notes

1. For insert with grommet: maximum dimension is the one shown in the drawing.
For insert without grommet: insert is flush to the shell. Maximum dimension for the receptacle is 25.55 mm (1.006 in.) and for the plug is 23.52 mm (0.926 in.).
For insert with optical contacts: the maximum dimension for the receptacle is 38.70 mm (1.524 in.) and for the plug is 36.00 mm (1.418 in.).

Disconnect Application

EPXB2 COMPOSITE SHELL DIMENSIONS

CLASS M

Receptacle [LL]

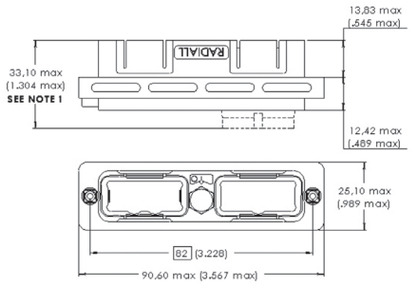

Plug [PB]

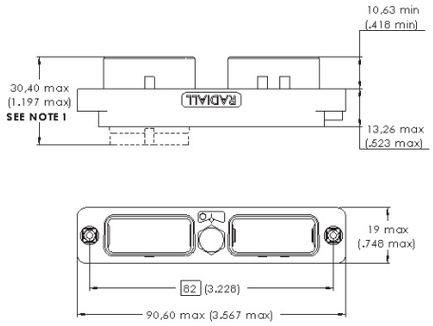

SINGLE PANEL CUT-OUT

Shell Mounting Code D and L

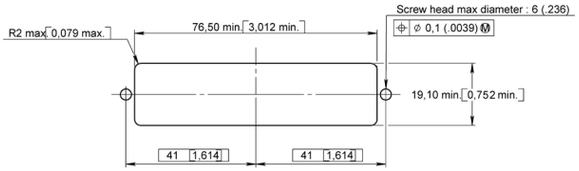

MULTIPLE PANEL CUT-OUT

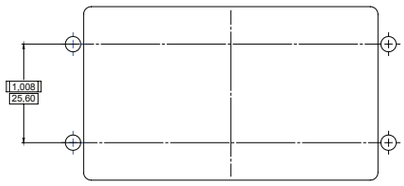

Notes

1. *For insert with grommet (EPXBE and EPXBH): maximum dimension is the one shown in the drawing.*
   For insert without grommet (EPXBN): is flush to the shell. Maximum dimension for the receptacle is 25.55 mm (1.006 in.) and for the plug is 23.52 mm (0.926 in.).
   For inserts with optical contacts: the maximum dimension for the receptacle is 38.70 mm (1.524 in.) and the plug is 36.00 mm (1.418 in.).

Disconnect Application

EPXB2 WEIGHTS

Weights include the shell with no polarization. If locking is needed, please add the following weights:

- Jackscrew: 9.0 g
- Jacknut: 7.8 g
- Bulkhead Jacknut: 8.7 g

CLASS	SHELL MOUNTING / SHELL STYLE	A	B	D	F	L
Class N	L	-	-	45 g (1.59 oz)	45 g (1.59 oz)	45 g (1.59 oz)
	H	-	35 g (1.23 oz)	36 g (1.27 oz)	36 g (1.27 oz)	36 g (1.27 oz)
	Z	80 g (2.82 oz)	80 g (2.82 oz)	-	-	-
	R	45 g (1.59 oz)	-	-	-	-
	P	-	30 g (1.06 oz)	30 g (1.06 oz)	-	30 g (1.06 oz)
	W	75 g (2.65 oz)	75 g (2.65 oz)	-	-	-
	B	50 g (1.76 oz)	-	-	-	-
Class J	H	-	-	-	-	27 g (0.95 oz)
	C	-	-	-	-	35 g (1.23 oz)
	P	-	25 g (0.88 oz)	-	-	-
	D	-	30 g (1.06 oz)	-	-	-
Class M	L	-	-	35 g (1.23 oz)	-	35 g (1.23 oz)
	P	-	24 g (0.85 oz)	25 g (0.88 oz)	-	25 g (0.88 oz)

Rack & Panel Application

EPXB2 ACCESSORIES

	PART NUMBER	DESCRIPTION
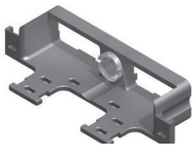	617922007	Straight Strain Relief (Composite)
	617922014	Straight Strain Relief for Fiber Optic Cable (Anodized Aluminium)
	617928100	Straight EMI Backshell (Nickel-Plated Composite)
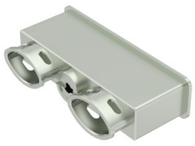	617925069	Short Straight EMI Backshell (Nickel-Plated Composite)
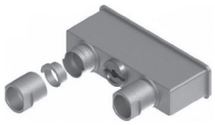	617925052	EMI Backshell for Braid Shield Termination (Nickel-Plated Aluminium)
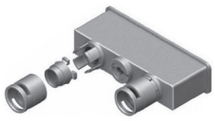	617925054	EMI Backshell For Screened Twisted Pair Cables (Nickel-Plated Aluminium)
	617925056	Backshell for Large Sized Wire Harnesses (Nickel-Plated Aluminium) [1]
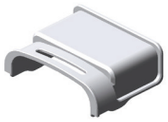	617925018	EMI Backshell for iEPX Connectors (Composite)
	617922029	Fiber Optic Backshell (Composite)

Notes

1. Not compatible with jackscrew

Rack & Panel Application

EPXB2 SPARE PARTS

	PART NUMBER	DESCRIPTION
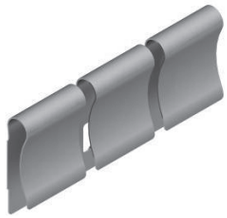	617954101	Grounding Spring (For EPXB2 Aluminium Only)
	617980029	Jacknut – A/B/C/D/E/F
	617980028	Jacknut – N/R/W/X/Y/Z
	617980022	Universal Jacknut
	617980066	Bulkhead Jacknut – A/B/C/D/E/F
	617980067	Bulkhead Jacknut – N/R/W/X/Y/Z
	617980012	Jackscrew – A/B/C/D/E/F
	617980013	Jackscrew – N/R/W/X/Y/Z
	617980023	Universal Jackscrew
	617954002	Dust Cap for Plug Shell (Pink Color)
	617954003	Dust Cap for Receptacle Shell (Pink Color)
	617954004	ESD Dust Cap Plug Shell (Black Color)
	617954005	ESD Dust Cap Receptacle Shell (Black Color)
	617929023	Sealing Inserts for Fly Away Applications: Mateable with Pin Insert
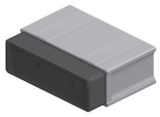	617929022	Sealing Inserts for Fly Away Applications: Mateable with Socket Insert

Rack & Panel Application

DISCONNECT TOOLS

	PART NUMBER	DESCRIPTION	TO BE USED WITH		
			EPXA1	EPXB1	EPXB2
	282664	1/4 in. Hex. Screwdriver Bit to Affix the Nut of the Jackscrew or the Jacknut to the EPXB2 Accessories	-	-	✓
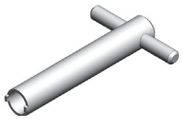	282665	Spigot Wrench to Affix the Nut of the Jackscrew or the Jacknut to the EPXB2 Accessories	-	-	✓
	282666	Allen Wrench for 1/4 turn Fasterner (3/32 in.)	✓	✓	-
	282666002	Allen Wrench for Rear Accessories (5/64 in.)	-	✓	-
	282666001	Allen Wrench for Jackscrew (9/64 in.)	-	-	✓
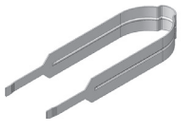	282521002	Insert Extraction Tool	-	✓	✓
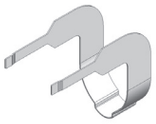	282521004	Right Angle Insert Extraction Tool	-	✓	✓
	282521007	Bulkhead Insert Extraction Tool	-	-	✓
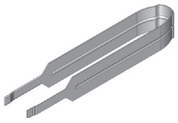	282521005	Insert Extraction Tool	✓	-	-
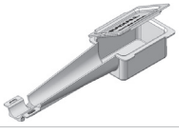	617954020	Plastic Box to Protect Wired Inserts during Handling	✓	✓	✓
	F780855000	Hexagonal Key 2 mm (5/64 in.) Flats for Sleeve Holder Removal	-	✓	✓
	282668001	Tweezers to Change Polarizing Posts and Keys	-	✓	-

Rack & Panel Application

EPXB3 PRODUCT OVERVIEW

Detailed View of Receptacle and Plug with Accessories for the EPXB3 Rack & Panel Connector:

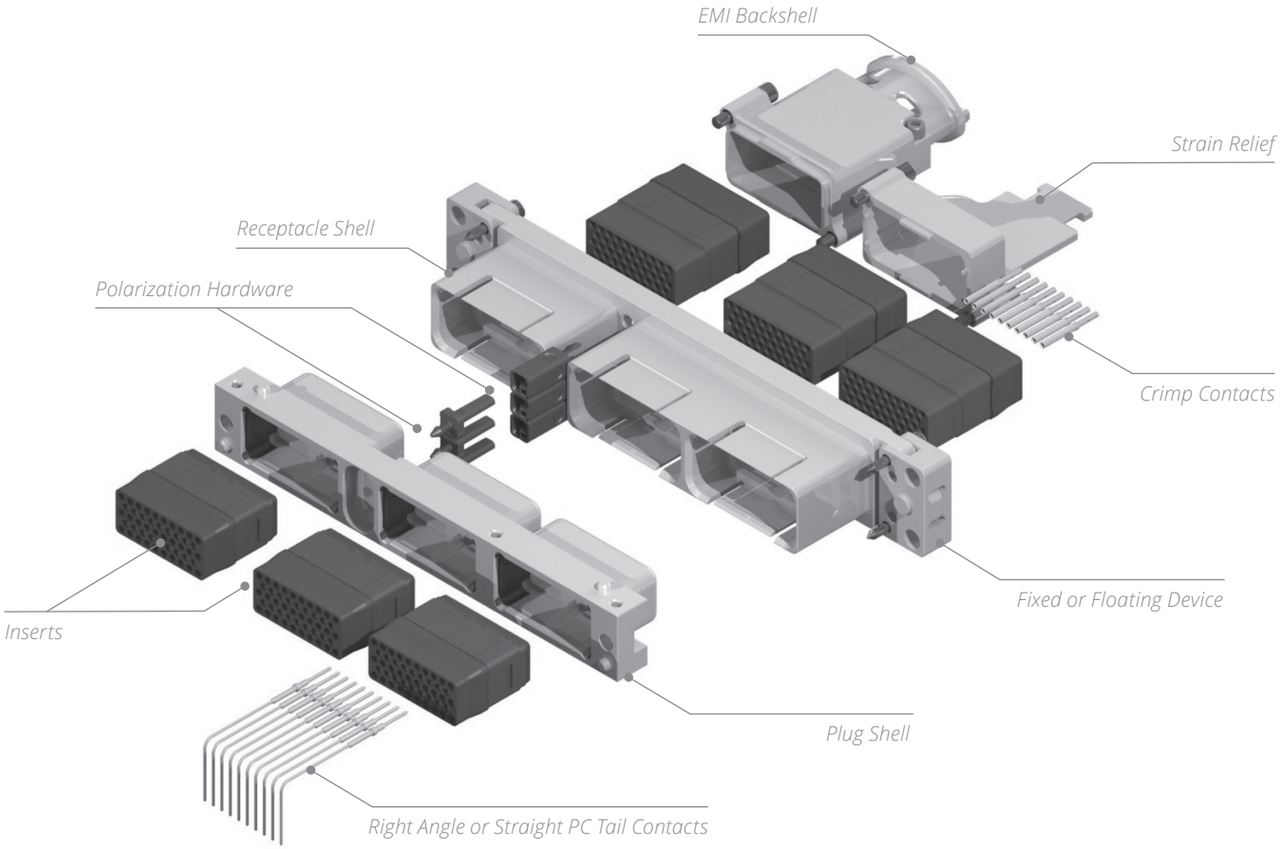

Rack & Panel Application

HOW TO ORDER EPXB1, B2, B3 & B4 SHELL

EPX

SERIES PREFIX

SHELL SIZE
B1: One cavity shell
B2: Two cavity shell
B3: Three cavity shell
B4: Four cavity shell

SHELL STYLE
P: Plug, nickel-plated
R: Receptacle, nickel-plated

SHELL MOUNTING
(refer to page 1-52 for codes)
M: Plug, fixed connector with Ø 3.96 mm holes and 4-40 UNC on side
N: Plug, fixed connector with 8-32 UNC and 4-40 UNC on side
S: Plug or Receptacle, fixed with 4 × 8-32 UNC
T: Receptacle, floating with 4 × 8-32 UNC (two axes) [1]

POLARIZATION CODE
1: Shell delivered with polarizing keys unassembled
2: Shell delivered with no polarizing keys

PANEL CUT-OUT CODING
A TO Z: Receptacle, refer to page 1-54 for the code selection
0 (ZERO): Plug, no panel cut-out coding

Notes
1. This floating option is not available in EPXB4 version.

Rack & Panel Application

HOW TO ORDER EPXB1, EPXB2, B3 & B4 ASSEMBLY KIT FOR LRM

Assembly kit is delivered fully assembled including shell with inserts mounted, with or without contacts according to the selection. When selecting your insert codes, do not forget to place them in the order you want them assembled. Polarization hardware are always provided unassembled with assembly kits.

Tips to help you in your selection:

- You are free to use either pin or socket inserts in EPXB plug or receptacle.
- Crimp contacts can be delivered with a kit. Check which contacts will be included on page 1-10.
- If PC tail contacts are selected then all cavities including signal, power and quadrax are populated. Size 5 coax cavities are not populated.
- If PC tail contacts are needed, remember that only straight pin PC tail contacts are available, and in plug only.

All connector inserts will use the same insert class and the same contact termination.

EPX

SHELL SELECTION PART

SERIES PREFIX

SHELL SIZE
B1: One cavity shell
B2: Two cavity shell
B3: Three cavity shell
B4: Four cavity shell

SHELL STYLE
P: Plug, nickel-plated
R: Receptacle, nickel-plated

SHELL MOUNTING
(refer to page 1-52 for codes)
M: Plug, fixed connector with Ø 3.96 mm holes and 4-40 UNC on side
N: Plug, fixed connector with 8-32 UNC and 4-40 UNC on side
S: Plug or Receptacle, fixed with 4 × 8-32 UNC
T: Receptacle, floating with 4 × 8-32 UNC (two axes) [1]

PANEL CUT-OUT CODING
A TO Z: For receptacle, refer to page 1-54 for the code selection
0 (ZERO): For plug, no panel cut-out coding

INSERT SELECTION PART

CONTACTS TERMINATION
XS: Female insert without contacts
XP: Male insert without contacts
SS: Female insert with crimp contacts [2]
SP: Male insert with crimp contacts [2]
YA: Gold PC tail contacts length A [3]
ZA: Tin-lead PC tail contacts length A [3]
RA: Pure tin (RoHS) PC tail contacts length A [3]

INSERT CODE
Refer to page 1-10 to select insert code

INSERT CLASS
E: Environmental
N: Non-environmental (no rear grommet, no interfacial seal)
H: Non-environmental insert with a rear grommet (recommended for crimp contact)
T: Non-environmental insert with interfacial seal (recommended for PC tail contact)

Notes

1. *This floating option is not available in EPXB4 version*
2. *These contacts are delivered uninstalled*
3. *Refer to page 1-53 to select PC tail contacts for plug*

Rack & Panel Application

EPXB SHELL MOUNTING

RECEPTACLE SIDE	CODE	PLUG SIDES
N/A	M	Fixed Connector with Ø 3.96 mm Holes and 4-40 UNC Front or Side Mount 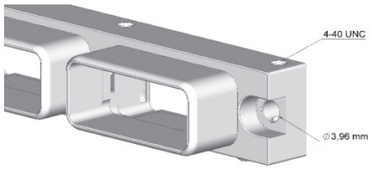
N/A	N	Connector with 8-32 UNC and 4-40 UNC Front or Side Mount 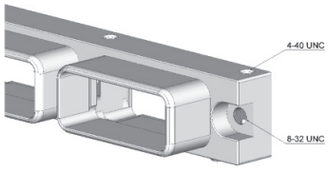
Fixed with 4 × 8-32 UNC Panel Rear Mount 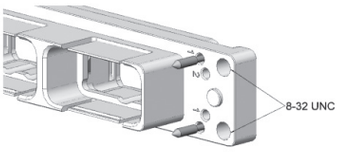	S	N/A
Floating with 4 × 8-32 UNC Panel Rear Mount 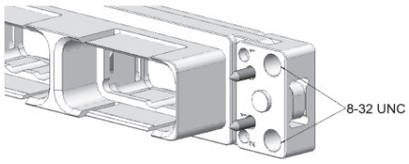	T	N/A

Rack & Panel Application

EPXB POLARIZATION CODE

A polarization device is included in the part number and should be installed as shown below. Each shell has three polarization hardware, which can be in four different positions. Each polarization hardware can have its own position; this allows a large range of codification.

PLUG SIZE 3
Polarization Post

RECEPTACLE SIZE 3
Polarization Key

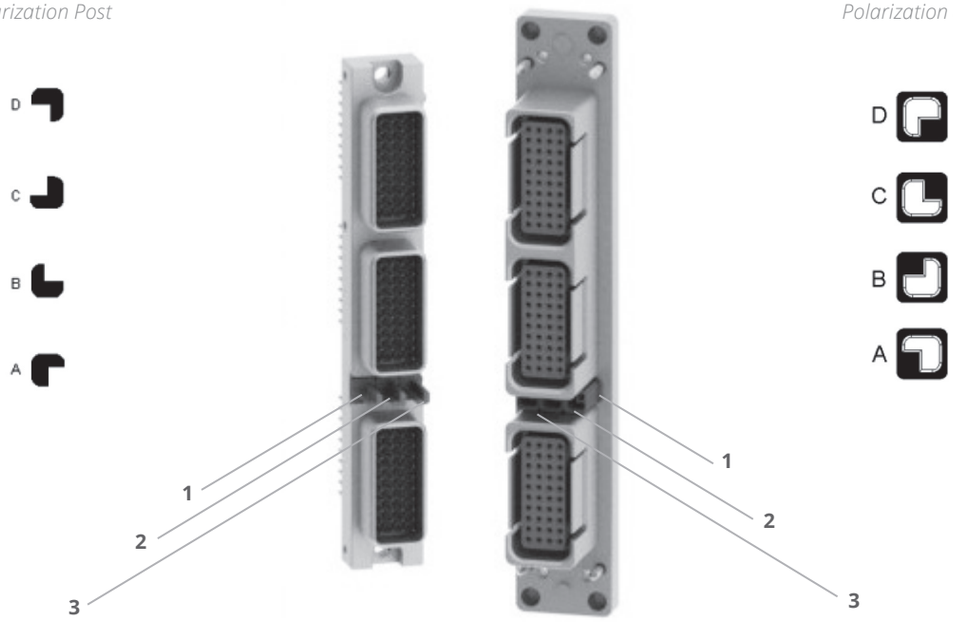

Connectors are shown front side with cavity A upwards.

CONTACT TERMINATIONS FOR EPXB1, EPXB2, EPXB3 AND EPXB4 PLUGS

STRAIGHT PC TAIL CONTACT TERMINATION				
MINI LENGTH E MM (INCH)	MINI LENGTH H MM (INCH)	GOLD	TIN-LEAD	PURE TIN (ROHS)
10.60 (0.417) [1]	-	YA	ZA	RA
13.80 (0.543) [1]	-	YB	ZB	RB
15.60 (0.614) [1]	-	YC	ZC	RC
19.55 (0.769)	5.40 (0.212)	YD	ZD	RD

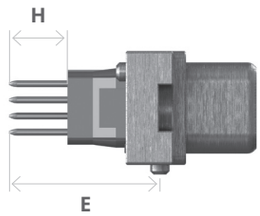

RIGHT ANGLE PC TAIL CONTACT TERMINATION				
MINI LENGTH F MM (INCH)	MINI LENGTH E MM (INCH)	GOLD	TIN-LEAD	PURE TIN (ROHS)
2.20 (0.086)	12.85 (0.505) [1]	GA	LA	TA
3.60 (0.141)	20.10 (0.791)	GB	LB	TB
3.60 (0.141)	12.85 (0.505) [1]	GC	LC	TC
2.20 (0.141)	20.10 (0.791)	GD	LD	TD

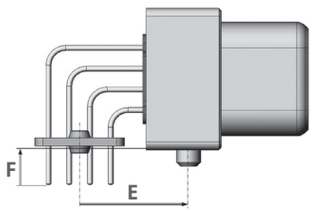

Notes

1. These PC tail lengths are not compatible with EPXBE and EPXBH inserts

Rack & Panel Application

EPXB PANEL CUT-OUT CODING

When several connectors are used with the same equipment, coding is available on the shell to correlate the correct shell with the correct panel cut-out.

On the panel cut-out, four areas are coded: area 1, 2, 3 and 4 (see figure below). For each area, one of the two holes should be drilled (hole n°1 or hole n°2). Each hole on the panel cut-out corresponds to the use of a coding pin on the shell.

PANEL CUT-OUT CODING	PANEL HOLE NUMBER TO DRILL IN AREA 1	PANEL HOLE NUMBER TO DRILL IN AREA 2	PANEL HOLE NUMBER TO DRILL IN AREA 3	PANEL HOLE NUMBER TO DRILL IN AREA 4
A	Connector Delivered With Coding Device Uninstalled			
B	1	1	1	1
C	1	1	1	2
D	1	1	2	1
E	1	1	2	2
F	1	2	1	1
G	1	2	1	2
H	1	2	2	1
J	1	2	2	2
K	2	1	1	1
L	2	1	1	2
M	2	1	2	1
N	2	1	2	2
P	2	2	1	1
R	2	2	1	2
S	2	2	2	1
T	2	2	2	2
Z	Connector Delivered Without Coding Pin [1]			

CODING PINS ARE FOR RECEPTACLE ONLY.

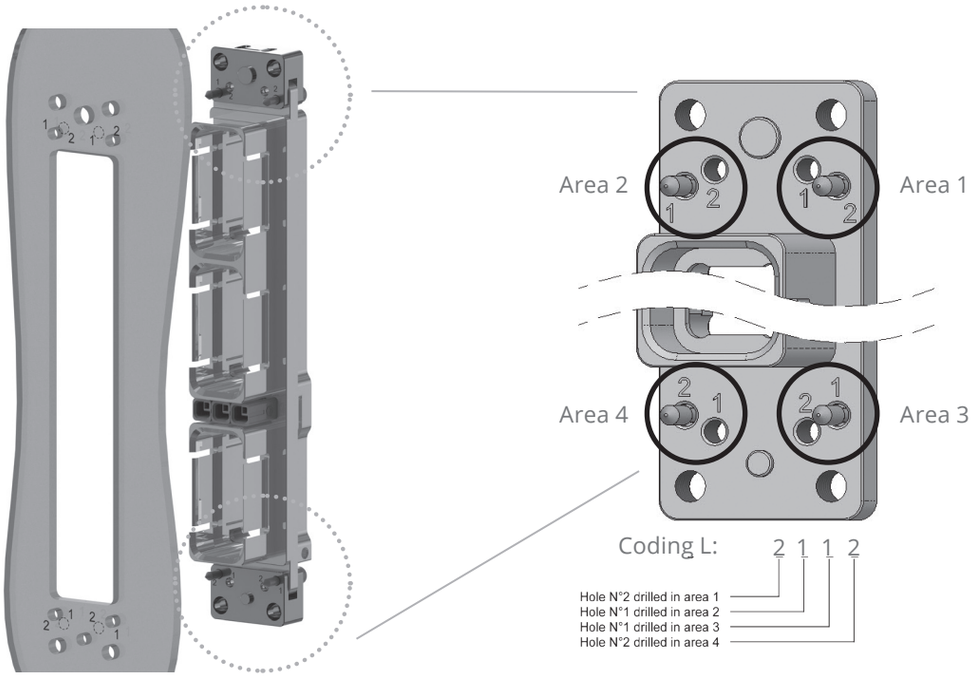

Notes

1. Z panel cut-out coding is only available with fix mounting.

Rack & Panel Application

EPXB1 SHELL DIMENSIONS & PANEL CUT-OUTS

RECEPTACLE

Floating Mount *Fixed Mount*

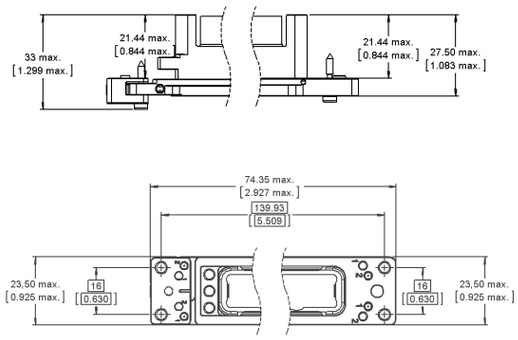

PLUG

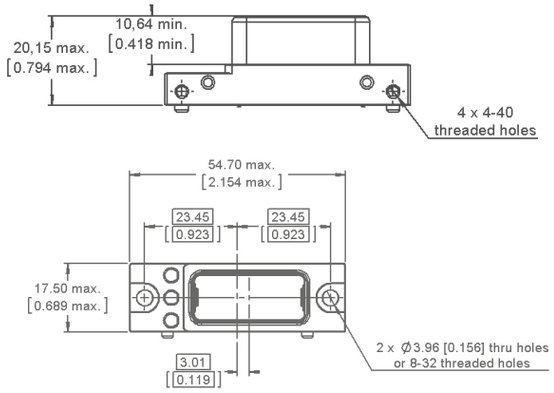

PANEL CUT-OUTS

Receptacle - Shown from the Rear Side

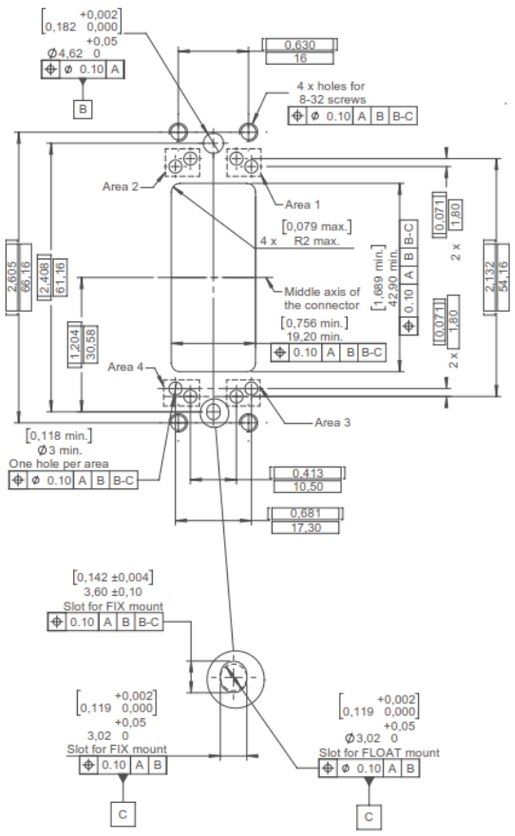

Plug - Shown from the Front Side

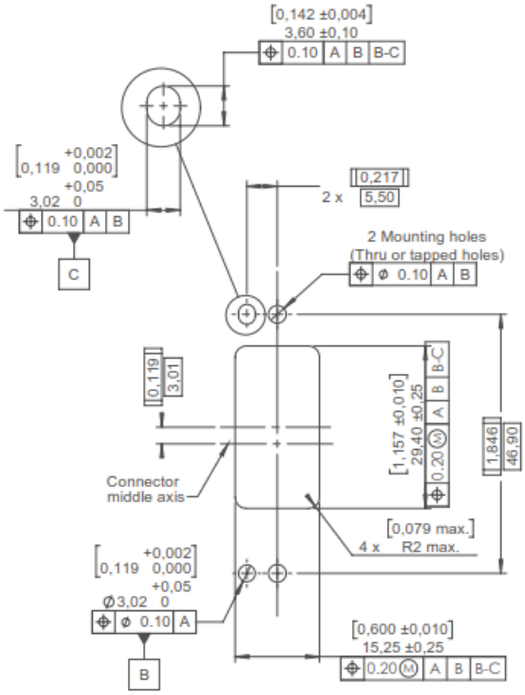

Rack & Panel Application

EPXB2 SHELL DIMENSIONS & PANEL CUT-OUTS

RECEPTACLE

Floating Mount *Fixed Mount*

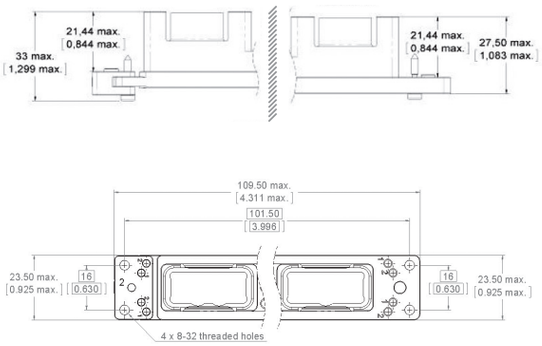

PLUG

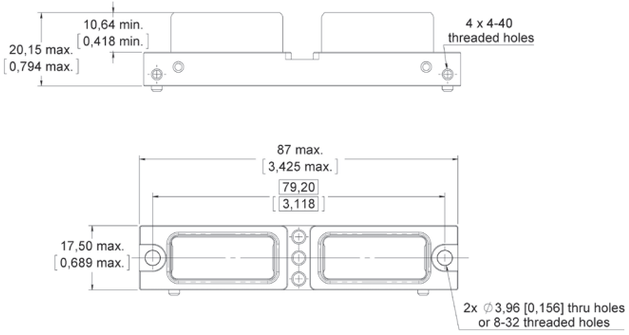

PANEL CUT-OUTS

Receptacle - Shown from the Rear Side

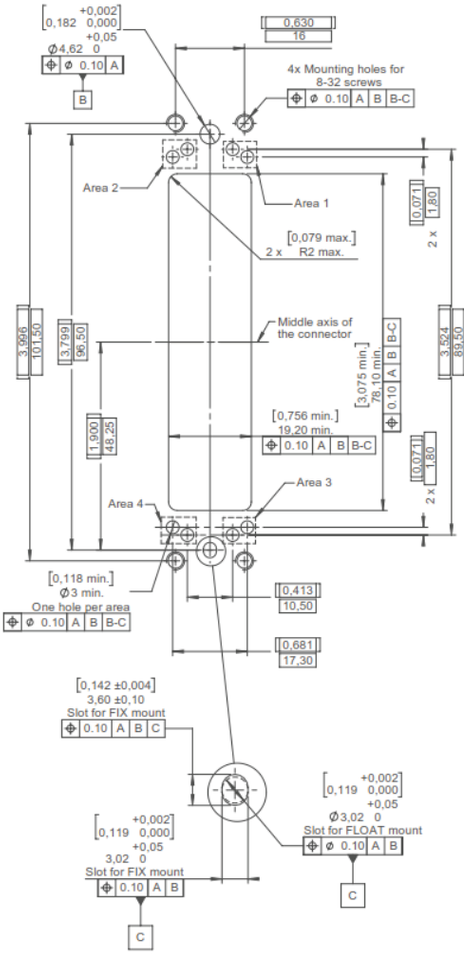

Plug - Shown from the Front Side

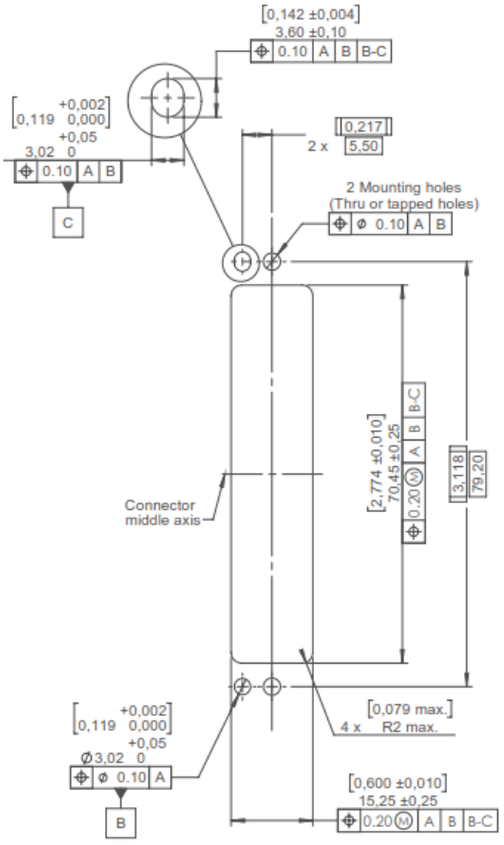

Rack & Panel Application

EPXB3 SHELL DIMENSIONS & PANEL CUT-OUTS

RECEPTACLE

Floating Mount *Fixed Mount*

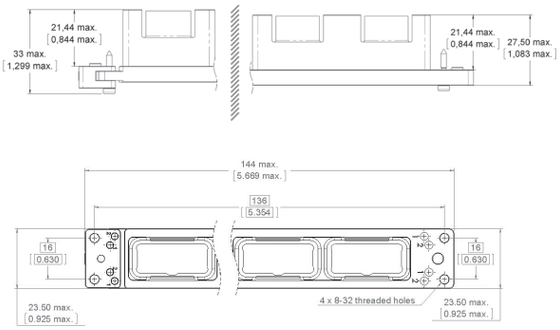

PLUG

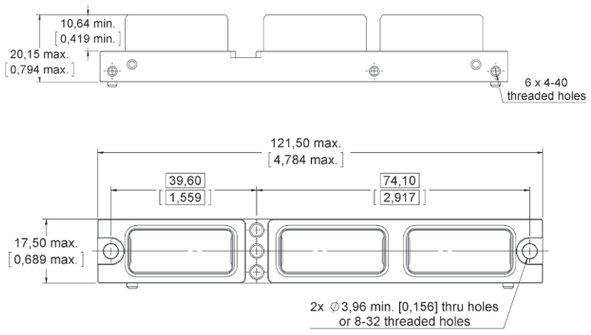

PANEL CUT-OUTS

Receptacle - Shown from the Rear Side

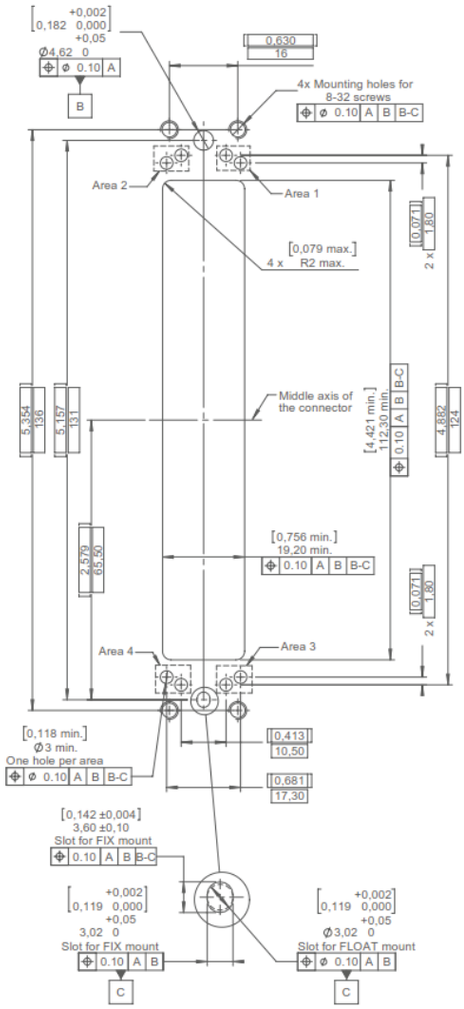

Plug - Shown from the Front Side

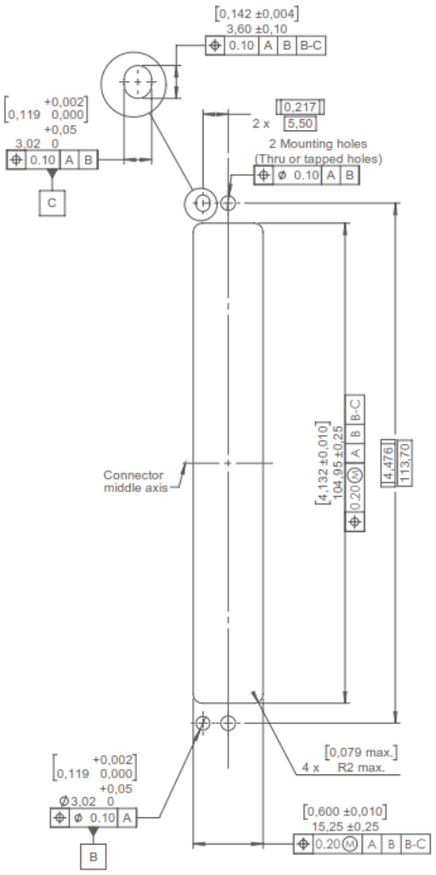

Rack & Panel Application

EPXB4 SHELL DIMENSIONS & PANEL CUT-OUTS

RECEPTACLE

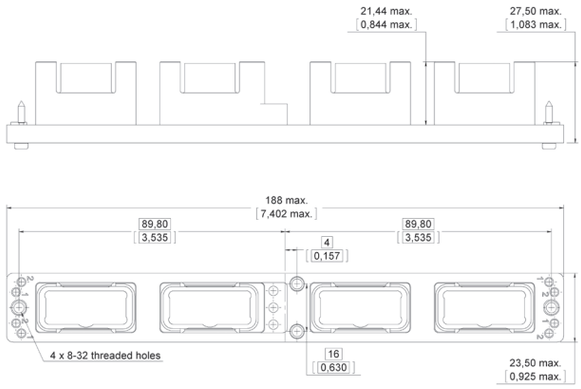

PLUG

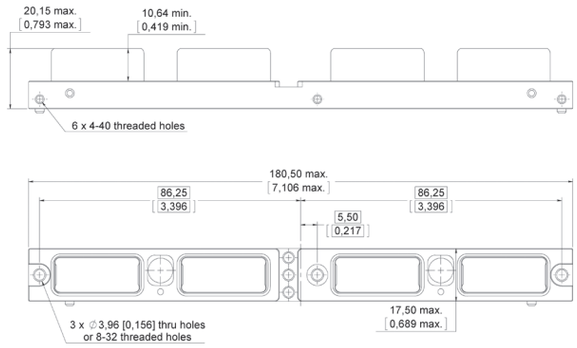

PANEL CUT-OUT

Receptacle - Shown from the Rear Side

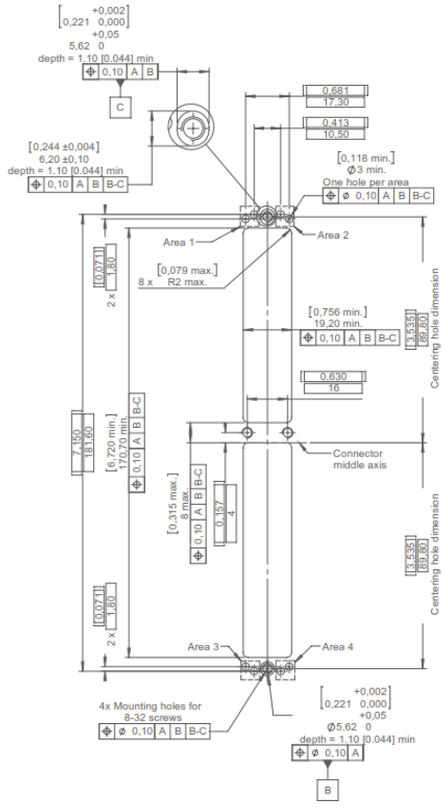

Plug - Shown from the Front Side

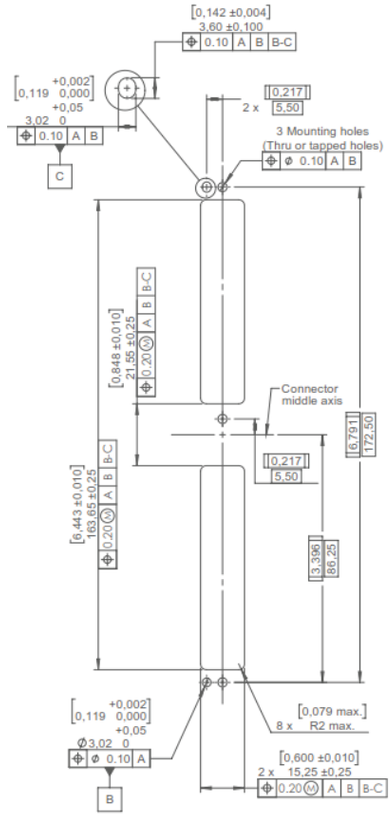

Rack & Panel Application

RACK & PANEL ACCESSORIES

	PART NUMBER	DESCRIPTION
	617925073	EMI Backshell for Receptacle Only (Aluminium, Nickel-Plated)
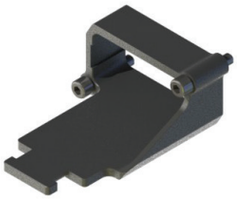	617922022	Straight Strain Relief for Receptacle Only (Composite)
	617954002	Dust Cap for Plug Shell (Pink Color)
	617954003	Dust Cap for Receptacle Shell (Pink Color)
	617954004	ESD Dust Cap Plug Shell (Black Color)
	617954005	ESD Dust Cap Receptacle Shell (Black Color)
	617980052	Coding Pin
	617980030	Polarization Post
	617980031	Polarization Key

Rack & Panel Application

RACK & PANEL TOOLS

	PART NUMBER	DESCRIPTION
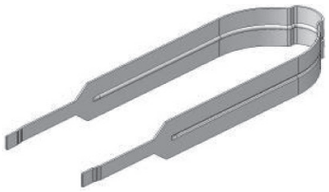	282521002	Insert Extraction Tool
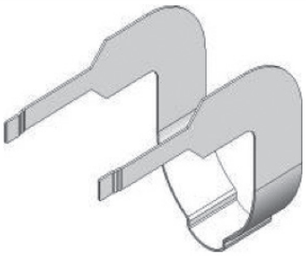	282521004	Right Angle Insert Extraction Tool
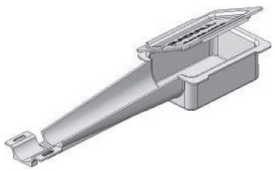	617954020	Plastic Box to Protect Wired Inserts During Handling
	F780855000	Hexagonal Hey 2 mm (5/64 in.) Flats for Sleeve Holder Removal

Rack & Panel Application

EPXB2 FOR LRU PRODUCT OVERVIEW

Detailed View of a Receptacle and Plug for the EPXB2 LRU Connector:

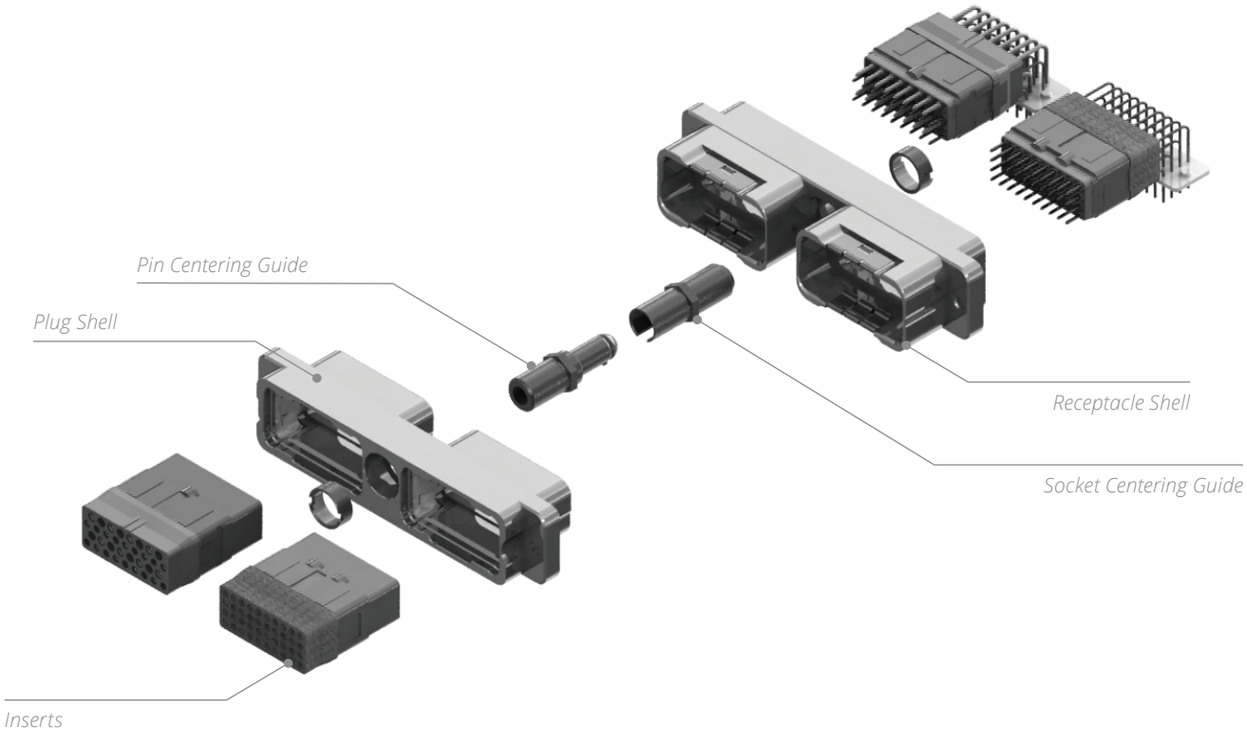

Rack & Panel Application

HOW TO ORDER EPXB2 SHELL FOR LRU

EPX

SERIES PREFIX

SHELL SIZE
B2: Two cavity shell

SHELL STYLE
For compatibility options, see the table below
L: Receptacle with flange
H: Classic receptacle
Z: Receptacle with ground block
R: Receptacle without ground fingers
P: Classic plug
W: Plug with ground block
D: iEPX plug with integrated stain-relief

SHELL MOUNTING
A: Panel rear mounted connector with 4 × 6-32 mounting holes
D: Connector with 2 × Ø 3.10 mm thru holes
F: Panel rear mounted connector with 2 × 6-32 mounting holes
L: Panel rear mounted connector with 2 × 4-40 mounting holes

LOCKING & POLARIZATION DEVICE [1]
4: Pin centering guide
5: Socket centering guide

POLARIZATION CODE
2: Polarizing device A to F delivered unassembled
3: Polarizing device N to Z delivered unassembled

SHELL PLATING
N: Nickel-plated aluminium
M: Nickel-plated composite
J: Nickel-plated, weight-optimized aluminium

AVAILABLE SHELL MOUNTING

	SHELL STYLE	A *(4 × 6.32 UNC)*	B *(No Holes)*	D *(2 × Ø 3.10 mm)*	F *(2 × 6.32 UNC)*	L *(2 × 4.40 UNC)*
Class N *(Aluminium)*	L	-	-	✓	✓	✓
	H	-	✓	✓	✓	✓
	Z	✓	✓	-	-	-
	R	✓	-	-	-	-
	P	-	✓	✓	-	✓
	W	✓	✓	-	-	-
Class J *(Weight-Optimized Aluminium)*	H	-	-	-	-	✓
	P	-	✓	-	-	-
Class M *(Composite)*	L	-		✓	-	✓
	P	-	✓	✓	-	✓

Notes
1. Pin/Socket centering guides can be mounted on either plug or receptacle shells. However, the standard options are:
- Pin centering guide for plug shells
- Socket centering guide for receptacle shells

Rack & Panel Application

HOW TO ORDER EPXB2 ASSEMBLY KIT FOR LRU

Assembly kits are delivered fully assembled including shell with inserts mounted, with or without contacts, according to the selection. When selecting your insert codes, do not forget to place them in the order you want them assembled. Locking and polarizing devices are delivered uninstalled.

Tips to help you in your selection:

- You are free to use either pin or socket inserts in EPXB plug or receptacle.
- Crimp contacts can be delivered with a kit. Check which contacts will be included on page 1-10.
- PC tail contacts can also delivered with a kit. Remember that only straight pin PC tail contacts are available, and in receptacle only.
- If PC tail contacts are selected, then all cavities including signal, power and quadrax are populated. Size 5 coax cavities are not populated.

All connector inserts will use the same insert class and the same contact termination.

EPX

SHELL SELECTION PART

SERIES PREFIX

SHELL SIZE
B2: Two cavity shell

SHELL STYLE
For option compatibility, see table on page 1-62
L: Receptacle with flange and ground fingers
H: Classic receptacle
Z: Receptacle with ground block
R: Receptacle without ground fingers
P: Classic plug
W: Plug with ground block
B: Bulkhead receptacle (bulkhead pin inserts compulsory)

SHELL MOUNTING
A: Rear panel mounted connector with 4 × 6-32 mounting holes
B: No mounting holes
D: Connector with 2 × Ø 3.10 mm thru holes
F: Rear panel mounted connector with 2 × 6-32 mounting holes
L: Rear panel mounted connector with 2 × 4-40 mounting holes

POLARIZATION
1: Jackscrew polarizing device A to F
2: Jacknut polarizing device A to F
3: Without locking device
4: Pin centering guide for plug shell for LRU application only, polarizing device A to F
5: Socket centering guide for receptacle shell for LRU application only, polarizing device A to F
6: Jackscrew polarizing device N to Z
7: Jacknut polarizing device N to Z

SHELL PLATING
N: Nickel-plated aluminium
M: Nickel-plated composite
J: Nickel-plated, weight-optimized aluminium

INSERT SELECTION PART

CONTACTS TERMINATION
XS: Socket insert without contacts
XP: Pin insert without contacts
SS: Socket insert with crimp contacts [1]
SP: Pin insert with crimp contacts [1]
YA: Gold PC tail contacts length A [2] [3]
ZA: Tin-lead PC tail contacts length A [2] [3]
RA: Pure tin (RoHS) PC tail contacts length A [2] [3]

INSERT CODE
Refer to page 1-10 to select insert code

INSERT CLASS
E: Environmental
N: Non-environmental
H: Non-environmental insert with a rear grommet, available for pin insert only (recommended for crimp contact)
T: Non-environmental insert with an interfacial seal, available for pin insert only (recommended for PC tail contact)

Notes
1. These contacts are delivered uninstalled.
2. Refer to pages 1-41 to select PC tail contacts for receptacle.
3. Not available with iEPX

Rack & Panel Application

EPX GALLEY ARINC 810 PRODUCT OVERVIEW

The new EPXB2 Galley connector was specially designed for the severe conditions required by galley equipment. A floating mechanism was developed to avoid any risk of jamming and to guarantee a fully sealed connection.

The EPXB2 is used on ovens, beverage makers, refrigerators, microwave ovens and other equipment that fits within the new standardized galley layouts.

The EPXB2 connector is modular and provides extra contact density to add new contacts such as the #8 Twinax CAN data bus contact. Backshell accessories are also available.

Detailed view of receptacle and plug with accessories for the EPXB2 galley connector:

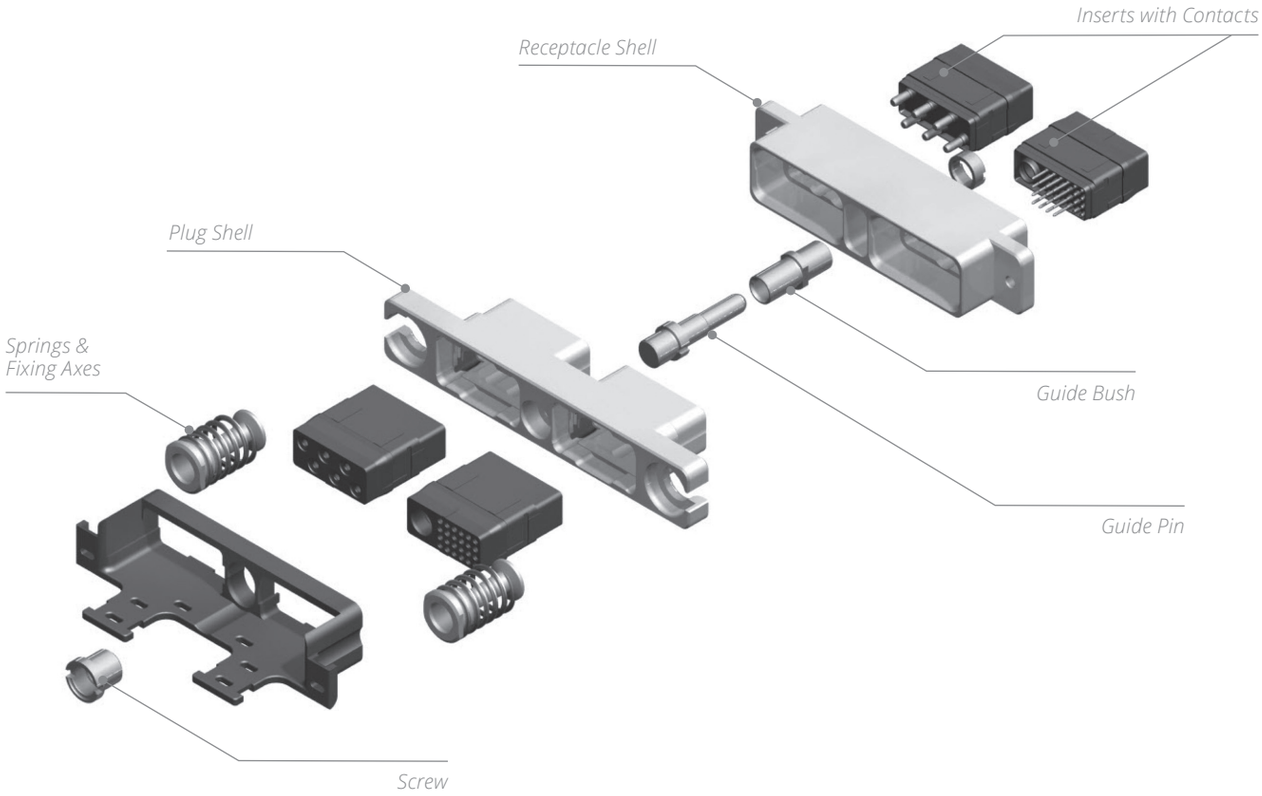

Rack & Panel Application

HOW TO ORDER EPX® GALLEY EQUIPMENT CONNECTOR

RECEPTACLE AND PLUG ASSEMBLY KIT

PART NUMBER	DESCRIPTION
617610188 or 617610558	Receptacle Assembled Kit [1]
617610189	Plug Assembled Kit [1]

Each item included in the kit is indicated in the table below and can also be ordered separately.

RECEPTACLE KITS

SHELL WITH 2 SELF-LOCKING THREADED HOLES

617610188

PART NUMBER	DESCRIPTION	QUANTITY PER KIT
617610212	Receptacle Shell	1
EPXBE25Q1PA	Insert for Cavity A	1
EPXBE06PB	Insert for Cavity B	1
617200	Pin Crimp Contacts/Size 22	15
617250	Pin Crimp Contacts/Size 12	6
616910	Filler Plug	9
617954003	Dust Cap	2

SHELL WITH 2 THRU HOLES

617610558

PART NUMBER	DESCRIPTION	QUANTITY PER KIT
617610419	Receptacle Shell	1
EPXBE25Q1PA	Insert for Cavity A	1
EPXBE06PB	Insert for Cavity B	1
617200	Pin Crimp Contacts/Size 22	15
617250	Pin Crimp Contacts/Size 12	6
616910	Filler Plug	9
617954003	Dust Cap	2

PLUG KIT

617610189 contents

PART NUMBER	DESCRIPTION	QUANTITY PER KIT
617610213	Plug Shell	1
EPXBE25Q1SA	Insert for Cavity A	1
EPXBE06SB	Insert for Cavity B	1
617300	Socket Crimp Contacts/Size 22	15
617350	Socket Crimp Contacts/Size 12	6
616910	Filler Plug	9
617922007	Strain Relief	1
617954002	Dust Cap	2

CAN DATA BUS CONTACTS

PART NUMBER	DESCRIPTION
617165011	Size 8 Twinax Pin Contact
617065011	Size 8 Twinax Socket Contact

Notes

1. Part numbers for assembly kits include: plug or receptacle shell, inserts, contacts, sealing plugs and dust caps.

Rack & Panel Application

DIMENSIONS & PANEL CUT-OUT

EPX® GALLEY EQUIPMENT CONNECTOR PER ARINC 810

RECEPTACLE

Front Mount

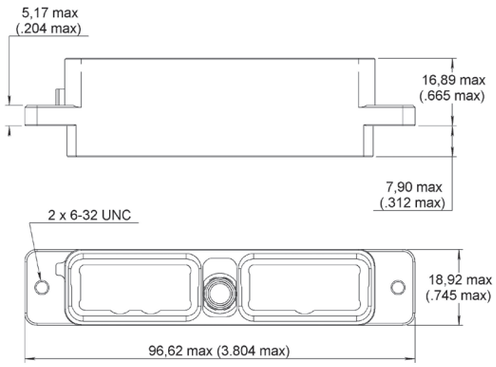

PLUG

Rear Mount

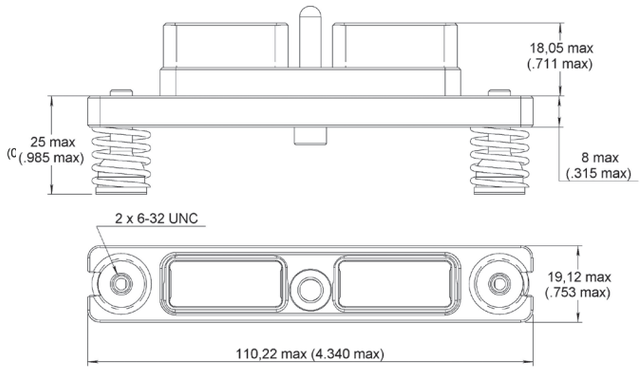

PANEL CUT-OUT

Receptacle

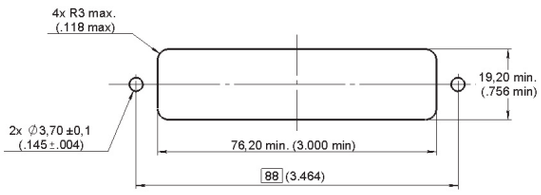

Plug

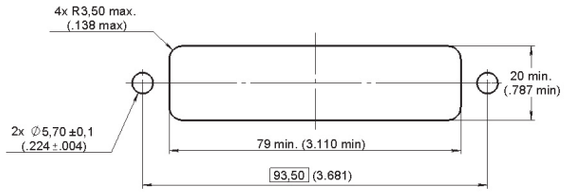

Rack & Panel Application

MULTI-GANG EPX® CONNECTORS

A whole range of multigang connectors are available for disconnect and Rack & Panel applications.

Multigang connectors features and benefits:

- Weight-saving design
- Make installation easier and quicker
- Utilize EPX modularity and its whole range of inserts
- Take advantage of EPX connector functionalities and use EPXB2 standard plug shells with a multigang shell

SPECIFICATIONS

- Several cavities for EPXB inserts (4 to 20 cavities)
- Standard EPX strain reliefs and backshells available
- In accordance with EN4644 performances

Several options are available:

- Grounding block
- Grounding spring fingers
- Float mounting
- Spring-loaded mounting

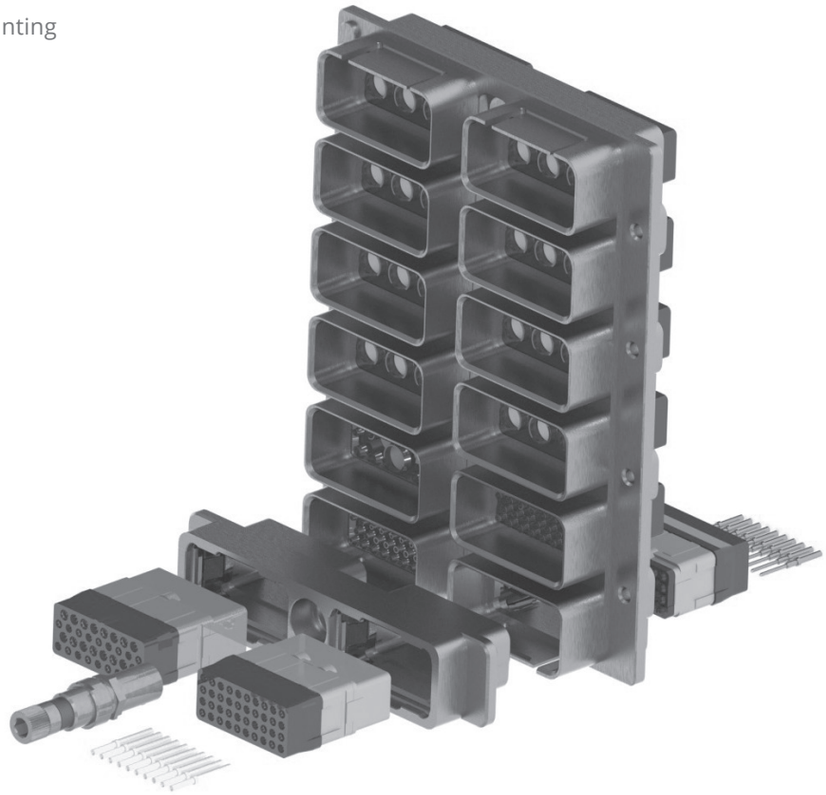

Notes

QM SERIES

Section 2 Table of Contents

INTRODUCTION

Introduction 2-2
Application 2-2
Features & Benefits 2-3
Electrical Characteristics ..... 2-4 to 2-5
Mechanical Characteristics 2-6
Environmental Characteristics 2-6

INSERTS

Insert Selection Table 2-7
How to Order QM Insert 2-8
EPXA Inserts Arrangements 2-9
EPXB Inserts Arrangements ..... 2-10 to 2-11

CONTACTS

Signal & Power Crimp Contacts ..... 2-12 to 2-13
Oversized & Reduced Crimp Barrel Contacts 2-13
Coaxial Contacts 2-14
Twinax & Triax Crimp Contacts 2-14
Quadrax & BMA Crimp Contacts 2-15
Luxcis® Fiber Optic Contacts 2-16
Filler Plugs 2-17
Sealing Plugs 2-17

CONNECTORS

QM Size A Compact Product Overview 2-18
QM Size A Grounding Block Product Overview 2-19
QM Size B Product Overview 2-20
How to Order QM Shell 2-21
Polarization Code 2-22
QM Size A Compact Shell Dimensions 2-23
QM Size A Shell Dimensions 2-24
QM Size B Shell Dimensions 2-25

ACCESSORIES

How to Order QM Mounting Device ..... 2-26 to 2-27
Dimensions of Mounting Devices 2-28
Strain Reliefs & Backshells 2-29
Spare Parts & Tools 2-30

INTRODUCTION

A MODULAR & TOOL-LESS CONNECTOR

Radiall QM series connectors are designed for use with in-line disconnect applications on commercial airplanes. QM series offers outstanding electrical performances and are designed with environmental and mechanical characteristics that provide long-lasting durability needed for the most severe aerospace applications.

Three connector sizes are available in QM series to optimize disconnect connection in terms of weight and density in an aircraft wiring system:

- QM Size B
- QM Size A
- QM Size A Compact

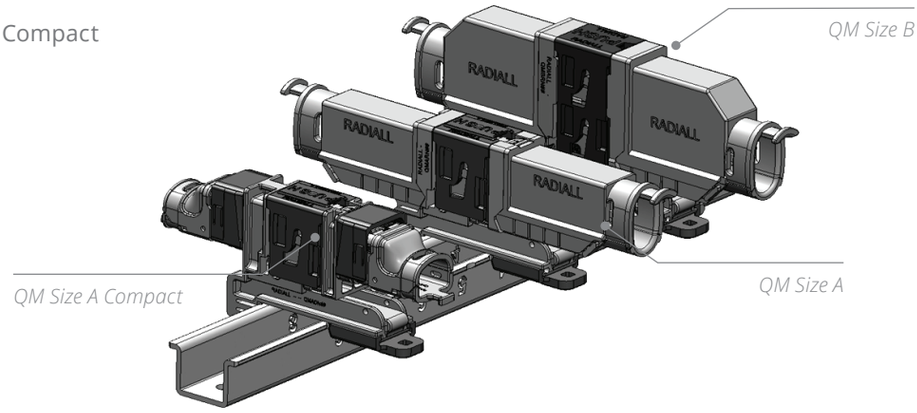

QM series is developed to provide the following benefits:

- Save time during wiring with a tool-less connector
- Save weight with a composite connector
- Simplify the wiring design as no panel cut outs are needed

QM size A and size B are mounted on the same range of rails. QM size A will save weight and space when a smaller insert with less contacts can be utilized in the wiring design compared to the QM size B. QM series offers a wide range of inserts that cover all contact technology. It is manufactured under US patent App, No 11/614.642. QM series is available worldwide.

APPLICATION

Interconnect solution for aerospace and harsh environment applications.

Introduction

FEATURES & BENEFITS

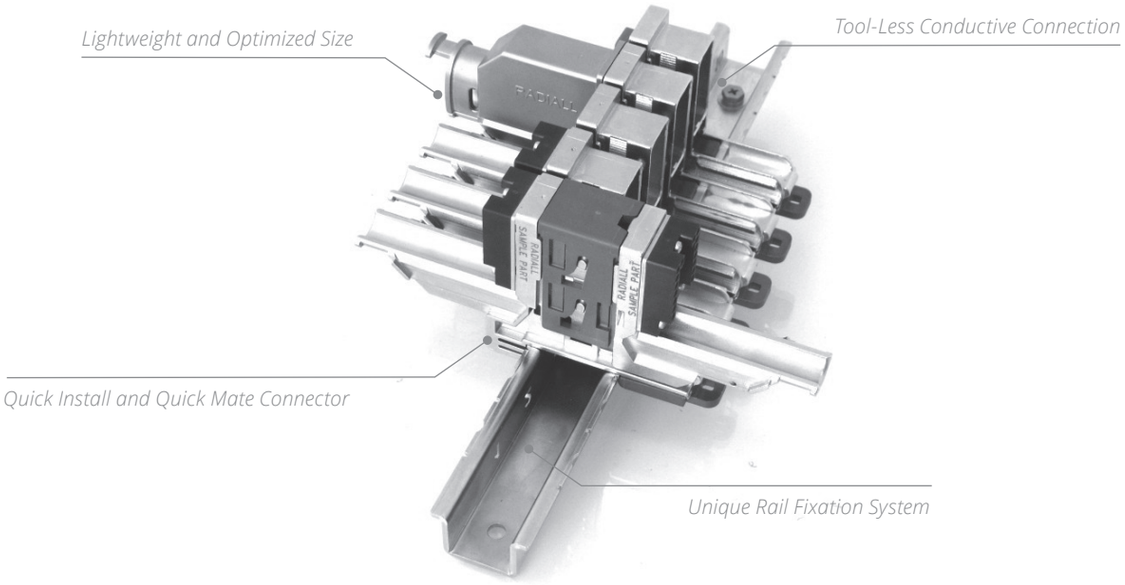

USER FRIENDLY - NO TOOLS NEEDED

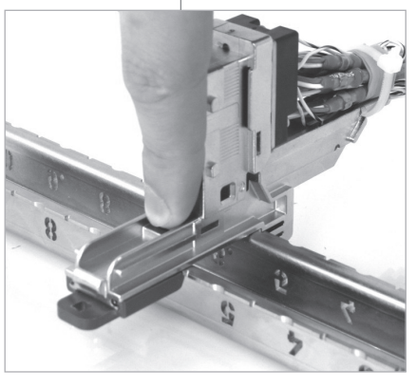

Click to Install

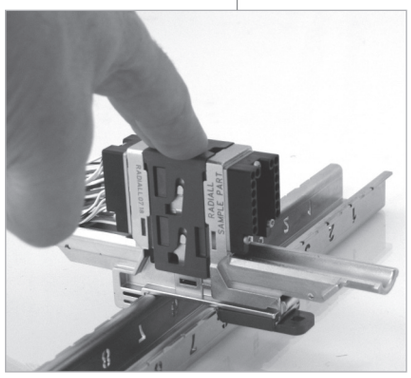

Push to Lock

Introduction

ELECTRICAL CHARACTERISTICS

Contacts are per EN3155-76 and EN3155-77. Electrical characteristics conform to SAE AS 39029 (MIL-C-39029 type A).

GROUND BLOCK CONTACT

	CONTACT WITH WIRE SIZE	MAX CURRENT AMPS
Contact to Contact	Contact + AWG20	7.5
Contact to Mounting Surface	Contact + AWG20	7.5

CONTACTS

CONTACT SIZE	WIRE SIZE	MAX CURRENT AMPS
22	AWG22	5
	AWG24	3
	AWG26	2
20	AWG20	7.5
	AWG22	5
	AWG24	3
16	AWG16	13
	AWG18	10
	AWG20	7.5
12	AWG12	23
	AWG14	17
	AWG16	13
8	AWG8	46
5	AWG8	46 [1]
	AWG10	33
	AWG12	23

EMI SHIELDING EFFECTIVENESS

FREQUENCY (MHZ)	LEAKAGE ATTENUATION (DB)
100	65
200	63
300	61
400	59
500	58

Notes

1. Size 5 contacts are not part of SAE AS 39029 (MIL-C-39029 type A). They are qualified by Radiall to 46 Amps.

Introduction

DIELECTRIC WITHSTANDING VOLTAGE

EIA 364-20 (EIA364 Standard) with Leakage Current < 1mA

LEVEL	ENVIRONMENTAL INSERTS VOLTAGE (VRMS)	NON-ENVIRONMENTAL VOLTAGE (VRMS)
Sea Level	1,500	1,500
50,000 ft	800	600
70,000 ft	800	300

INSULATION RESISTANCE

EIA 364-21 (EIA364 Standard)

TEMPERATURE	INSULATION RESISTANCE
Ambient Temperature	> 5,000 mΩ
155 °C (+347 °F)	> 200 mΩ

ENVIRONMENTAL CHARACTERISTICS

- **Shell-to-Shell Conductivity:** < 2.5 mΩ, operating voltage: 400 Vrms or 500 Vdc at sea level
- **Voltage Stability (Ground Block):** Maximum variation 4 mV SAE AS 81714 (MIL-T-81714)
- **Magnetic Permeability:** < 2 μ
- **Lightning Strike:** 3.6 kA according to EIA-364, Test procedure 75, Type B Test level 1
- **Comparative Tracking Index (CTI), Including Inserts:** 250 V

Introduction

MECHANICAL CHARACTERISTICS

VIBRATION & SHOCK

SHELL TYPE	MATERIAL	VIBRATION	SHOCK
		FOR 5 HOURS IN EACH OF THE 3 AXIS/INTERRUPTION < 1MS EIA 364-28 (EIA364 STANDARD)	THREE SHOCKS IN EACH AXIS EIA 364-27 (EIA364 STANDARD) CONDITION A
QM Series	Composite	4 Rail Positions = Acceleration 13.8 Grms 0.2G²/Hz from 10 to 400 HZ and 0.03 G²/hz from 400 to 2,000 Hz	4 Rail Positions = Shock Amplitude 50 G/duration 11 ms
		22 Rail Positions = Acceleration 6.2 Grms 0.04 g²/Hz from 10 to 400 Hz 0.006 g²/Hz at 2,000 Hz	22 Rail Positions = Shock Amplitude 15 G/duration 11 ms

Interruption shall not exceed 1µs, they are measured on electrical contacts, between shells and between shell and rail.

MATING/UNMATING

SHELL TYPE	MATERIAL	MATING/UNMATING	MATING FORCE
QM Size B	Nickel-Plated Composite	100 Cycles	250 N max
QM Size A			125 N max

RETENTION CHARACTERISTICS

Contact retention EIA 364-29 (EIA364 standard) on terminated connectors.

CONTACT SIZE	RETENTION FORCE	MAX DISPLACEMENT
Ground Block	88 N (20 lb)	0.30 mm (0.012 in.)
22	53.4 N (12 lb)	0.38 mm (0.015 in.)
20	89 N (20 lb)	0.38 mm (0.015 in.)
16	111.2 N (25 lb)	0.38 mm (0.015 in.)
12	133.45 N (30 lb)	0.38 mm (0.015 in.)
8	133.45 N (30 lb)	0.38 mm (0.015 in.)
5	133.45 N (30 lb)	0.38 mm (0.015 in.)

- **Insert Retention:** 400 N (90 lb) (EIA 364-35 = EIA364 standard)
- **Max Displacement:** 0.30 mm (0.012 in.)

ENVIRONMENTAL CHARACTERISTICS

- **Temperature Range:** -65 °C/+155 °C (EIA 364-32 - test condition 4)
- **Temperature Life:** 1,000 H at 155 °C (EIA 364-17 - method A)
- **Salt Spray:** 96 hours (nickel-plating) EIA 364-26 (EIA364 standard) test condition A
- **Humidity:** 10 days with temperature variation from -10 °C to +65 °C EIA 364-31 Method 4, test condition B (EIA364 standard).
- **Altitude Immersion:** 3 cycles at 50,000 ft EIA 364-03 (EIA364 standard).

For more details, please refer to QM product specification.

Inserts

INSERT SELECTION TABLE

QM size B connectors will use EPXB inserts.
QM size A connectors will use EPXA inserts.

SERIES	INSERT NAME	INSERT CODE	CONTACT SIZE & TYPE [1]										TOTAL CONTACTS
			22*	20*	15 OR 16*	16	16	12*	8	8	5	5	
			SIGNAL	POWER	POWER OR COAX	LUXCIS® FIBER OPTIC	POWER IN FIBER OPTIC CAVITY	POWER OR COAX	POWER	QUADRAX OR TWINAX	COAX OR TRIAX	POWER	
EPXA	00	0	-	-	-	-	-	-	-	-	-	-	0
	1C1	A	-	-	-	-	-	-	-	-	1	-	1
	1P1	B	-	-	-	-	-	-	-	-	-	1	1
	04	C	-	-	2	-	-	2	-	-	-	-	4
	09	D	-	3	6	-	-	-	-	-	-	-	9
	14	E	-	14	-	-	-	-	-	-	-	-	14
	14M	F	8	3	3	-	-	-	-	-	-	-	14
	17	G	12	5	-	-	-	-	-	-	-	-	17
	20	H	20	-	-	-	-	-	-	-	-	-	20
	6	J				6							6
EPXB	00	0	-	-	-	-	-	-	-	-	-	-	0
	C3	A	-	-	-	-	-	-	-	-	3	-	3
	P3	B	-	-	-	-	-	-	-	-	-	3	3
	3Q3	C	-	-	-	-	-	-	-	3	-	-	3
	06	D	-	-	-	-	-	6	-	-	-	-	6
	10Q2	E	-	8	-	-	-	-	-	2	-	-	10
	12F6	F	-	-	-	6	6	-	-	-	-	-	12
	F12C	G	-	-	-	12	-	-	-	-	-	-	12
	13C1	H	-	6	4	-	-	2	-	-	1	-	13
	13P1	J	-	6	4	-		2	-	-	-	1	13
	14	K	-	-	14	-	-	-	-	-	-	-	14
	17	L	-	14	-	-	-	3	-	-	-	-	17
	20C1	M	-	19	-	-	-	-	-	-	1	-	20
	20P1	N	-	19	-	-	-	-	-	-	-	1	20
	22	P	-	16	6	-	-	-	-	-	-	-	22
	22V	Q	-	16	6	-	-	-	-	-	-	-	22
	25P1	R	24	-	-	-	-	-	1	-	-	-	25
	25Q1	S	24	-	-	-	-	-	-	1	-	-	25
	28	T	22	-	6	-	-	-	-	-	-	-	28
	30	U	-	30	-	-	-	-	-	-	-	-	30
	34	W	18	16	-	-	-	-	-	-	-	-	34
	40	X	40	-	-	-	-	-	-	-	-	-	40
	48	Y	48	-	-	-	-	-	-	-	-	-	48

Notes

1. *Only signal and power contacts with an asterisk (*) can be delivered with inserts. All other contacts must be orderedseparately (coax, twinax, quadrax and fiber optic contacts).*

Inserts

HOW TO ORDER QM INSERT

EPX

SERIES PREFIX

INSERT SIZE [1]
A: Insert for QM size A
B: Insert for QM size B

CLASS [2]
E: Environmental

INSERT NAME
Refer to table on page 2-7 for inserts arrangement.

INSERT TYPE
P: Pin
S: Socket

INSERT KEYING
A: Insert with keying A

CONTACT WITHOUT CODE
S: Signal and power crimp contacts are delivered with insert but uninstalled (refer to page 2-4)
Inserts 00, 1C1, 1P1, F6, C3, P3, 3Q3, 12F6, F12C and 3T3 are not available in S contact version.

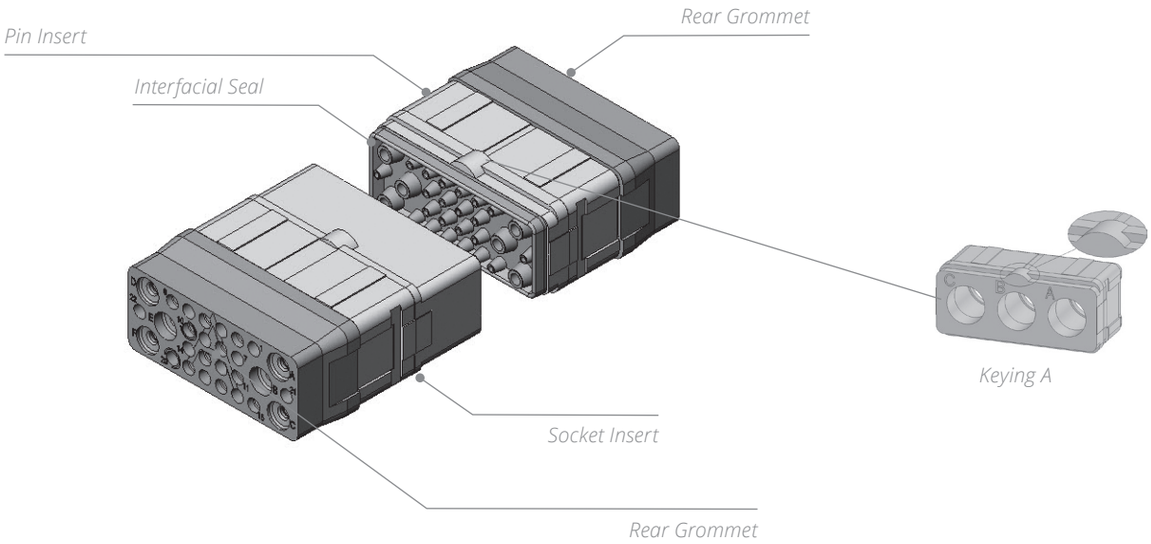

Notes
1. Inserts are designed for rear release and rear removable contacts
2. Pin and socket inserts can be installed in either plug or receptacle shell

Inserts

EPXA INSERTS ARRANGEMENTS

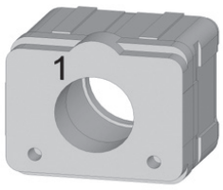	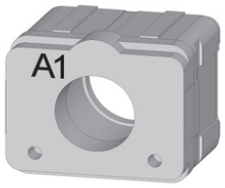	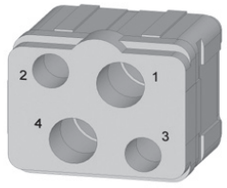	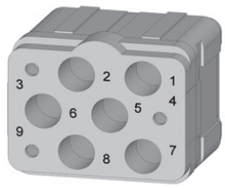
Insert Name 1C1 Insert Name A 1 × Size 5 Coax Contacts	**Insert Name 1P1** Insert Code B 1 x Size 5 Power Contacts	**Insert Name 04** Insert Code C 2 × Size 15 or 16 Contacts 2 × Size 12 Contacts	**Insert Name 09** Insert Code D 3 × Size 20 Contacts 6 × Size 15 or 16 Contacts
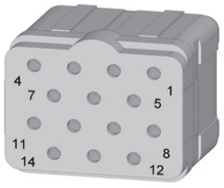	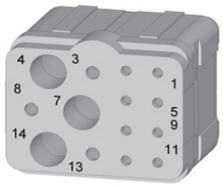	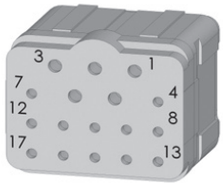	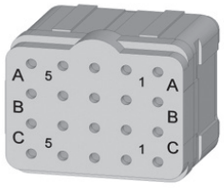
Insert Name 14 Insert Code E 14 × Size 20 Contacts	**Insert Name 14M** Insert Code F 8 × Size 22 Contacts 3 × Size 20 Contacts 3 × Size 15 or 16 Contacts	**Insert Name 17** Insert Code G 12 × Size 22 Contacts 5 × Size 20 Contacts	**Insert Name 20** Insert Code H 20 × Size 22 Contacts
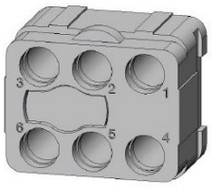			
Insert Name F6 Insert Code J 6 × Size 16 Optical LuxCis® Termini			

WEIGHTS

Average weight per class and type for EPXA inserts without contacts.

INSERT CLASS FOR EPXA	INSERT TYPE	
	PIN	SOCKET
E	4.10 g (0.14 oz)	5.30 g (0.19 oz)

Inserts

EPXB INSERTS ARRANGEMENTS

Full size inserts arrangements are compliant with EN4644.

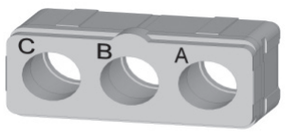	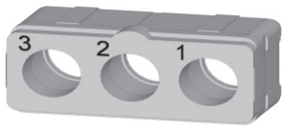	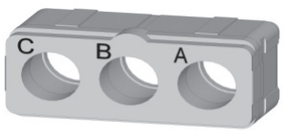	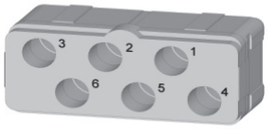
Insert Name C3 Insert Code A 3 × Size 5 Coax Contacts	**Insert Name P3** Insert Code B 3 × Size 5 Power Contacts	**Insert Name 3Q3** Insert Code C 3 × Size 8 Quadrax Contacts	**Insert Name 06** Insert Code D 6 × Size 12 Medium Power Contacts
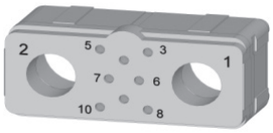	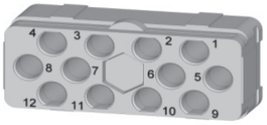	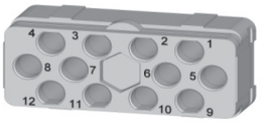	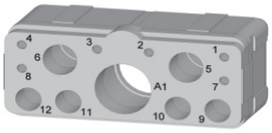
Insert Name 10Q2 Insert Code E 8 × Size 20 Contacts 2 × Size 8 Quadrax Contacts	**Insert Name 12F6** Insert Code F 6 × Size 16 Optical LuxCis® Termini 6 × Size 16 Special Electrical Contacts	**Insert Name F12C** Insert Code G 12 × Size 16 Optical LuxCis® Termini	**Insert Name 13C1** Insert Code H 6 × Size 20 Contacts 4 × Size 15 or 16 Contacts 2 × Size 12 Contacts 1 × Size 5 Contact
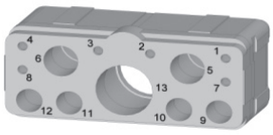	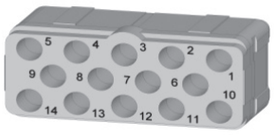	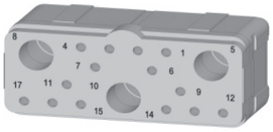	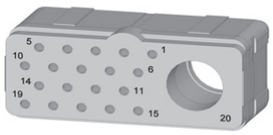
Insert Name 13P1 Insert Code J 6 × Size 20 Contacts 4 × Size 15 or 16 Contacts 2 × Size 12 Contacts	**Insert Name 14** Insert Code K 14 × Size 15 or 16 Contacts	**Insert Name 17** Insert Code L 14 × Size 20 Contacts 3 × Size 12 Contacts	**Insert Name 20C1** Insert Code M 19 × Size 20 Contacts 1 × Size 5 Contact
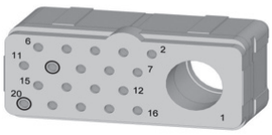	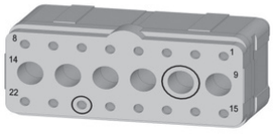	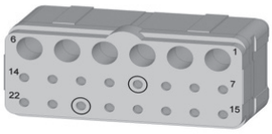	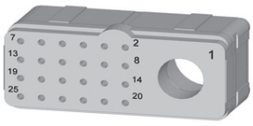
Insert Name 20P1 Insert Code N 19 × Size 20 Contacts 1 × Size 5 Power Contact	**Insert Name 22** Insert Code P 16 × Size 20 Contacts 6 × Size 15 or 16 Contacts	**Insert Name 22V** Insert Code Q 16 × Size 20 Contacts 6 × Size 16 Contacts	**Insert Name 25P1** Insert Code R 24 x Size 22 Contacts 1 x Size 8 Power Contact

Inserts

Full size inserts arrangements are compliant with EN4644.

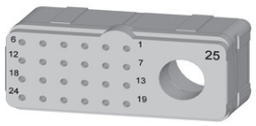	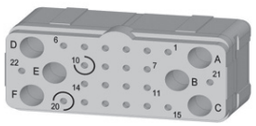	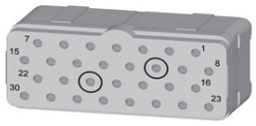	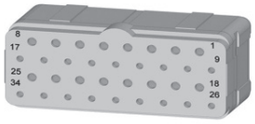
Insert Name 25Q1 Insert Code S 24 x Size 22 Contacts 1 x Size 8 Quadrax Contact	**Insert Name 28** Insert Code T 22 x Size 22 Contacts 6 x Size 15 or 16 Contacts	**Insert Name 30** Insert Code U 30 x Size 20 Contacts	**Insert Name 34** Insert Code W 18 x Size 22 Contacts 16 x Size 20 Contacts
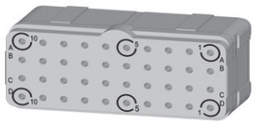	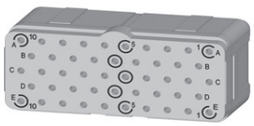		
Insert Name 40 Insert Code X 40 x Size 22 Contacts	**Insert Name 48** Insert Code Y 48 x Size 22 Contacts		

WEIGHTS

Average weight per class and type for EPXB inserts without contacts.

INSERT CLASS FOR EPXB	INSERT TYPE	
	PIN	SOCKET
E	7.90 g (0.28 oz)	10.00 g (0.35 oz)

Contacts

SIGNAL & POWER CRIMP CONTACTS

QM series offers a wide range of contacts compliant with EN3155 and SAE AS 39029. The available contacts cover aerospace applications for terminating cables.

- Signal and power contacts
- High frequency with coax, twinax and triax contacts
- Ethernet links with Quadrax contacts
- Optical links with LuxCis® contacts

FEATURES & BENEFITS

- Significantly reduced cost of ownership
- Reduced dependence on gold rate fluctuation
- No change in the contact crimping or soldering process

SPECIFICATIONS

- Same contact design as full plated version
- Contact interface gold plated with 1.27 µm
- For crimp version, no changes are required for the crimping process
- Product qualification is available upon request

CONTACT SELECTION TABLE

CONTACT SIZE		WIRE SIZE	TYPE	PART NUMBER FULL PLATED	CRIMPING TOOL	POSITIONER	SELECTOR	INS/EXT TOOL	MATERIAL OF TOOL
22		22	Pin	617200	282281 M22520/2-01	282970 M22520/2-23	4	282522 (M81969/14-01)	Plastic
		24					3		
		26	Socket	617300					
20		20	Pin	617221	282281 M22520/2-01	282971 M22520/2-08	7	282522001 (M81969/39-01)	Plastic
		22					6		
		24	Socket	617320			5		
16		16	Pin	617240	282291 M22520/1-01	282972 M22520/1-02	6	282515 (M81969/14-03)	Plastic
		18	Socket	617340			5		
		20					4		
	For Ground Block	20	Pin	617221050	282281 M225520/2-01	282581015 M22520/2-11	7	282886 M81969/1-02	Metal
			Socket	N/A					
	For Optical/ Electrical Cavity	16	Pin	617235003 [1]	282291 M22520/1-01	282581013	6	282515 (M81969/14-03)	Plastic
		18					5		
		20					4		

Notes

1. Electrical contacts for optical inserts are always pin contacts (hermaphrodite).

Contacts

CONTACT SELECTION TABLE

CONTACT SIZE	WIRE SIZE	TYPE	PART NUMBER FULL PLATED	CRIMPING TOOL	POSITIONER	SELECTOR	INS/EXT TOOL	MATERIAL OF TOOL
12	12	Pin	617250	282291 M22520/1-01	282972 M22520/1-02	8	282549004 (M81969/14-04)	Plastic
	14	Socket	617350			7		
	16					6		
8	8	Pin	617291002 [2] [3]	R282600000 M22520/23-01 + Die set R282650000 M22520/23-02	282588	N/A	282549001	Metal
		Socket	617391002 [2] [3]					
5	8	Pin	617280 [2] [4]	R282600000 M22520/23-01 + Die set R282650000 M22520/23-02	282557020	N/A	282946 (M81969/28-01)	Metal
		Socket	617390 [2] [4]		282557021			
	12	Pin	617260001 [2] [4]	282613	282586003	6		
	16	Socket	617370001 [2] [4]		282586005	4		

OVERSIZED & REDUCED CRIMP BARREL CONTACTS

CONTACT SIZE		WIRE SIZE	TYPE	PART NUMBER FULL PLATED	CRIMPING TOOL	POSITIONER	SELECTOR	INS/EXT TOOL	MATERIAL OF TOOL
22	Reduced Crimp Barrel	28	Pin	617201	282281 M22520/2-01	282970 M22520/2-23	5	282522 (M81969/14-01)	Plastic
		30	Socket	617301			4		
	Oversize Crimp Barrel	20	Pin	617200200	282281 M22520/2-01	282970 M22520/2-23	5		
		22	Socket	617300200			4		
		24					3		
20	Reduced Crimp Barrel	22	Pin	617224001	282281 M22520/2-01	282971 M22520/2-08	4	282522001 (M81969/39-01)	Plastic
		24	Socket	617324001			3		
		26					3		
	Oversize Crimp Barrel	18	Pin	617221200	282281 M22520/2-01	282971 M22520/2-08	5		
		20	Socket	617320200			5		
		22					4		
16	Reduced Crimp Barrel	20	Pin	617241	282291 M22520/1-01	282972 M22520/1-02	5	282515 (M81969/14-03)	Plastic
		22	Socket	617341			5		
		24					4		
	Reduced Crimp Barrel for Optical Electrical Cavity	20	Pin	617235002 [1]	282291 M22520/1-01	282581013	5		
		22					5		
		24					4		
	Oversize Crimp Barrel	14	Pin	617240200	282291 M22520/1-01	282972 M22520/1-02	6		
		16	Socket	617340200			5		
		18					5		

Notes

1. Electrical contacts for optical inserts are always pin contacts (hermaphrodite).
2. In order to make these contacts environmental, it is necessary to add a sealing boot. Please contact us for additional information.
3. These power contacts can be used in power inserts only (25P1 EPXB insert).
4. These power contacts can be used in power inserts only (P3, 13P1 and 20P1 EPXB inserts).

Contacts

COAXIAL CRIMP CONTACTS

CONTACT SIZE	CABLE TYPE	TYPE	ENVIRONMENTAL PART NUMBER	NON-ENVIRONMENTAL PART NUMBER	INS/EXT TOOL	MATERIAL OF TOOL
15-16	RG188 FILECAF1709/6 F1709/8 RG174-RG179-RG316 ASNE0639XY 75 Ohms	Pin	617130		282512 (M81969/14-03)	Metal
		Socket	617030			
	RG178	Pin	617131			
		Socket	617031			
	GORE/AXON P812817 FILECA F1703-134 FILOTEX SP132868	Pin	617132			
		Socket	617032			
	RG178 DT	Pin	617133			
		Socket	617033			
	UT .047	Pin	617135			
		Socket	617035			
12	UT.085-RG405	Pin	617160		282549004 (M81969/14-04)	Plastic
		Socket	617060			
5	RG58-RG141	Pin	617101001	617101	282946 (M81969/28-01)	Metal
		Socket	617001001	617001		
	RG142 - RG400	Pin	617102001	617102		
		Socket	617002001	617002		
	RG174-RG316-RG188-RG178DS NEXAN 10036442 75 Ohms	Pin	617103001	617103		
		Socket	617003001	617003		
	RG178-RG196	Pin	617104001	617104		
		Socket	617004001	617004		
	RG180 PAN6422XZ ANSE063WGH 96 Ohms	Pin	617105001	617105		
		Socket	617005001	617005		

TWINAX & TRIAX CRIMP CONTACTS

CONTACT SIZE	CABLE TYPE	TYPE	ENVIRONMENTAL PART NUMBER	NON-ENVIRONMENTAL PART NUMBER	INS/EXT TOOL	MATERIAL OF TOOL
12 Triax	ECS0700	Pin	617190010		282549004 (M81969/14-04)	Plastic
		Socket	617090010			
	M17/176-00002	Pin	617190012			
		Socket	617090012			
8 Triax	TENSOLITE 24463/9PO25X-2 100 Ohms	Pin	617165021	617165020	282549001	Metal
		Socket	617065021	617065020		
	WHITMOR W2675-1575	Pin	617165	617165001		
		Socket	617065	617065001		
8 Twinax	ABS0386WF24 & TYCO 1726A1424A	Pin	617165011	620165010	282549001	Metal
		Socket	617065011	620065010		
5 Triax	PAN6421ZA002 77 Ohms M17/176-00002 EN3375-003 Raychem 106113 77 Ohms	Pin	617150001	617150	282946 (M81969/28-01)	Metal
		Socket	617050001	617050		
	TENSOLITE 24473/03159X 124 Ohms	Pin	617152001	617152		
		Socket	617052001	617052		

Contacts

QUADRAX & BMA CRIMP CONTACTS

QUADRAX CONTACTS

The Quadrax contact offer is compliant with Arinc 600 and EN3155-072 and EN3155-073 standards.

ENVIRONMENTAL QUADRAX

CONTACT SIZE	CABLE TYPE	TYPE	ENVIRONMENTAL PART NUMBER	EXTRACTION TOOL IN METAL
8	Ethernet Cable ABS0972 & ABS1503	Pin	617175011	282549001
		Socket	617075011	
	TENSOLITE NF24Q100	Pin	617175051	
		Socket	617075051	
	TENSOLITE NF26Q100/JSF Y18	Pin	617175053	
		Socket	617075053	
	TENSOLITE NF22Q100	Pin	617175041	
		Socket	617075041	

NON-ENVIRONMENTAL QUADRAX

CONTACT SIZE	CABLE TYPE	TYPE	NON-ENVIRONMENTAL PART NUMBER	COMPATIBLE SEALING BOOT PART NUMBER	EXTRACTION TOOL IN METAL
8	Ethernet Cable ABS0972 & ABS1503	Pin	617175012	617939003	282549001
		Socket	620075010		
	TENSOLITE NF24Q100	Pin	617175052		
		Socket	620075050		
	TENSOLITE NF26Q100/JSF Y18	Pin	617175054	617939005	
		Socket	620075021		
	TENSOLITE NF22Q100	Pin	617175040	617939003	
		Socket	620075040		

BMA CONTACTS

Extraction tool **282549001** is used for size 8 BMA contacts.
Environmental BMA contacts are all provided with sealing boots.

CONTACT SIZE	CABLE TYPE	CONNECTOR TYPE	ENVIRONMENTAL PART NUMBER	NON-ENVIRONMENTAL PART NUMBER	FREQUENCY RANGE	MAX VSWR	INSERTION LOSS
8	SHF5 - SHF5M [1]	Pin	617171011	617171010	DC-18 GHz	1.35	0.13 dB at Max Frequency (18 GHz)
	RG142	Pin	617171021	617171020	DC-12.4 GHz	1.35	0.11 dB at Max Frequency (12.4 GHz)
	SHF2.4M(1)/UT.085/ Harbour SS405/ Times Tflex405	Pin	617171031	617171030	DC-18 GHz	1.35	0.13 dB at Max Frequency (18 GHz)
	SHF5 - SHF5M [1]	Socket	617071011	617071010	DC-18 GHz	1.35	0.13 dB at Max Frequency (18 GHz)
	RG142	Socket	617071021	617071020	DC-12.4 GHz	1.35	0.11 dB at Max Frequency (12.4 GHz)
	SHF3 [1]	Socket	617071041	617071040	DC-18 GHz	1.35	0.13 dB at Max Frequency (18 GHz)

Notes

1. The BMA contacts, which can accommodate SHF cables, require a termination by Radiall.

Contacts

LUXCIS® FIBER OPTIC CONTACTS

The LuxCis® product range is a proven, flexible fiber optic interconnect solution offering high-speed communication in aerospace and other harsh environments.

OPTICAL PERFORMANCE

	MULTIMODE (PC) 850 / 1300 NM	SINGLEMODE (UPC) 1310 / 1550 NM
Insertion Loss (IL) Mean (IEC 61300-3-4 Method B)	0.1 dB	0.15 dB
Return Loss (RL) (IEC 61300-3-6)	> 20 dB	> 50 dB

MECHANICAL & ENVIRONMENTAL CHARACTERISTICS

	STANDARD	PERFORMANCE
Thermal Cycling	SAE AS 13441 Method 1003.1	-55 °C/+125 °C (Cable Dependent)
Temperature Endurance	TIA/EIA 455-4	1000 h at 125 °C (Cable Dependent)
Vibration	TIA/EIA 455-11	27 Grms
Shock	TIA/EIA 455-14	50 G, 11 ms
Durability	TIA / EIA 364-09	500 Cycles [1]
Maintenance	SAE AS 13441 Method 2002.1	10 Cycles
Cable Retention 1.8 mm Diameter 900 µm Diameter	SAE AS 13441 Method 2009.1	68 N 7 N
Humidity	TIA / EIA 455-5	10 Cycles / 24 h 90% RH -25 °C / +65 °C

LUXCIS® CONTACT PART NUMBERING SYSTEM

F7250

LUXCIS® SERIES

FERRULE TYPE
00: PC ferrule for single-mode fiber
03: PC ferrule for 50/125 or 62.5/125 µm multi-mode fiber
04: PC ferrule for 100/40 um multi-mode fiber
05: PC ferrule for 200/230 um multi-mode fiber

CABLE TYPE AND DIAMETER
118: 900 µm cable
318: 1.2 mm cable with strengthening members, tight structure
419: 1.6 to 2.2 mm cable, loose structure
519: 1.6 to 2.2 mm cable, tight structure

The sealing plug F718 211 200 is specifically designed to fill the unused LuxCis® Arinc 801 cavities.

Notes
1. Mating cycles are dependent on connector series. Radiall can support you with your cable and harness assemblies. Please contact your sales representative.

Contacts

FILLER PLUGS

Filler plugs are dedicated to non-environmental insert cavities.

SIZE	CONTACT CAVITY VERSION	INS/EXT	COLOR	PART NUMBER	DRAWING
22	For Pin & Socket	Rear/Rear	Black	620920	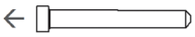
20			White	610941	
16 For Electrical Cavity			Blue	620922	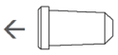
16 For Optical Cavity			Green	F718211200	
12			Yellow	620923	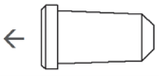
8	Pin		Nickel	619953	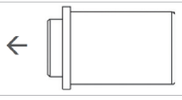
	Socket			619950	
5	Pin		White	617930	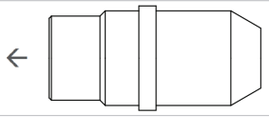
	Socket			617931	

SEALING PLUGS

Sealing plugs are dedicated to environmental insert cavities.

SIZE	CONTACT CAVITY VERSION	INS/EXT	COLOR	PART NUMBER	DRAWING
22	For Pin & Socket	Rear/Rear	Black	616910	
20			Red	616911	
16 For Electrical Cavity			Green	616912	
16 For Optical Insert				F718211200	
12			Orange	616913	
8			Red	618915	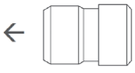
5				616914013	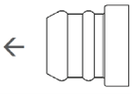

Notes

The arrows show the direction which you have to insert the plug.

Connectors

QM SIZE A COMPACT PRODUCT OVERVIEW

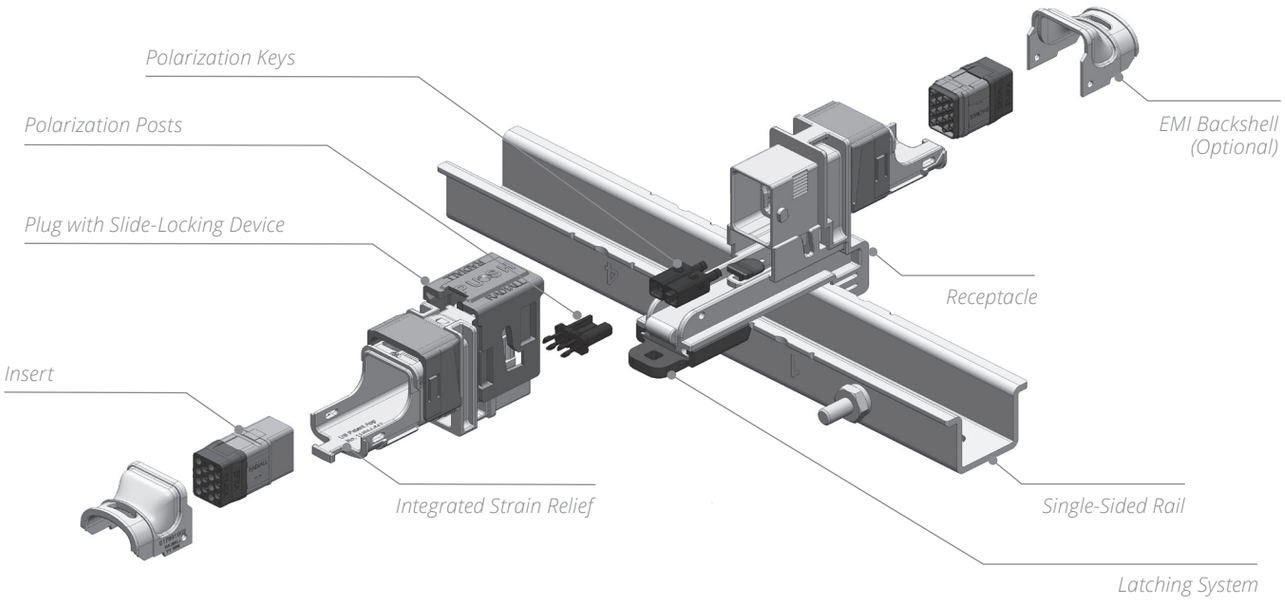

QM SIZE A GROUNDING BLOCK PRODUCT OVERVIEW

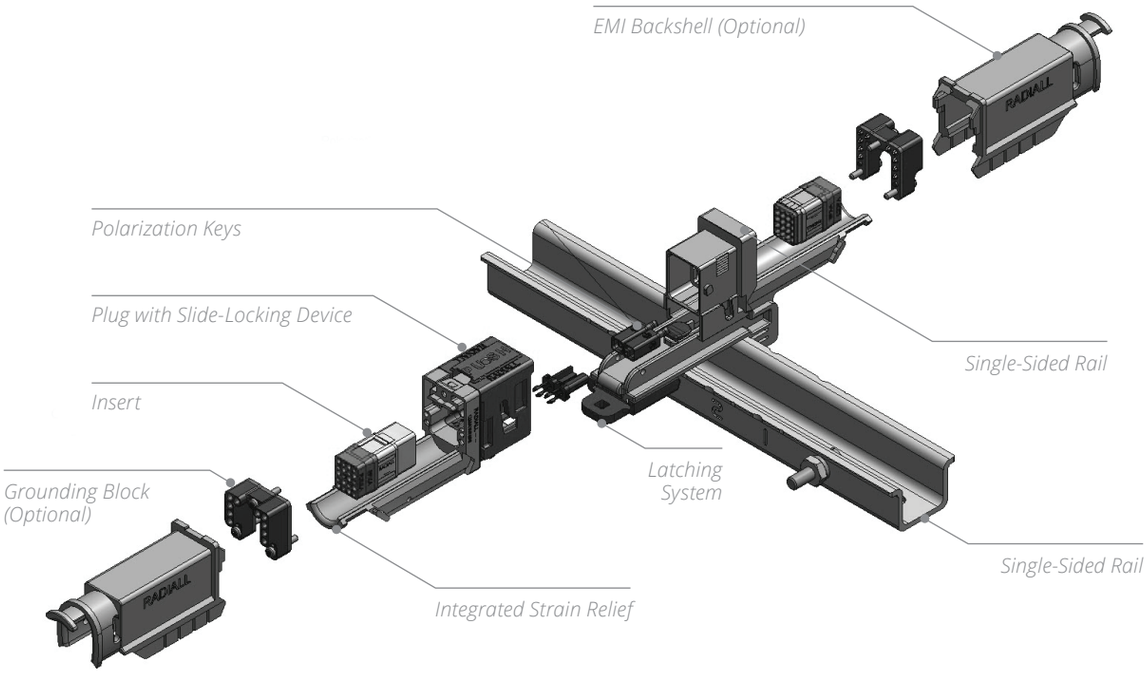

Connectors

QM SIZE B PRODUCT OVERVIEW

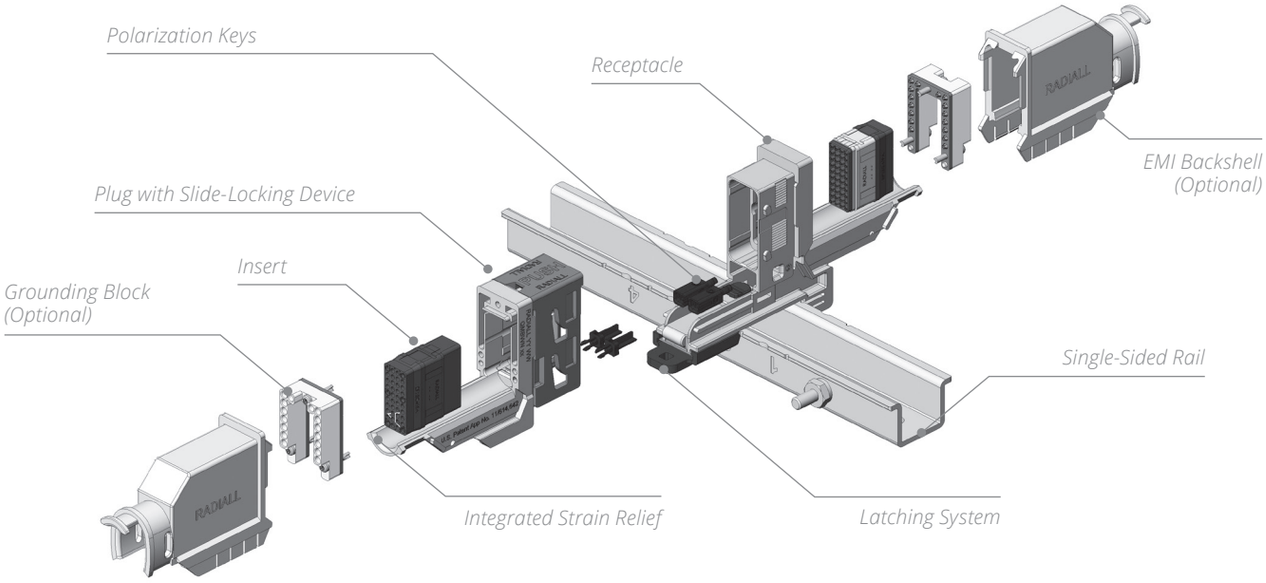

Connectors

HOW TO ORDER QM SHELL

QM

SERIES PREFIX

SHELL SIZE
A: QM size A shell
B: QM size B shell

PRODUCT TYPE
C: Plug for QM size A Compact only
D: Receptacle for QM size A Compact only
P: Plug [2]
R: Receptacle [2]
W: Plug with ground block [1] [2]
Z: Receptacle with ground block [1] [2]

FINISH
N: Nickel-plating

POLARIZATION
00: Delivered without polarizing keys
WITHOUT CODE: Delivered with polarizing keys not installed
****:** Delivered with polarizing keys installed according to code (see table 2 on page 2-22).

Notes
1. Shells with ground block are not compatible with EMI backshell.
2. Available with QM size A and QM size B.

POLARIZATION CODE

QM receptacle shell will be delivered with 2 polarization keys and QM plug with 2 polarization posts.

POLARIZATION KEYS FOR RECEPTACLE		POLARIZATION POSTS FOR PLUG	
		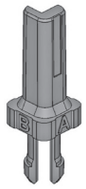	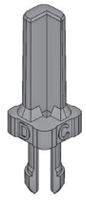
View Shows A and D	View Shows C and B	View Shows A and B	View Shows C and D

There are 16 possible codings:

KEY POSITION 1	A	A	A	A	B	B	B	B	C	C	C	C	D	D	D	D
KEY POSITION 2	A	B	C	D	A	B	C	D	A	B	C	D	A	B	C	D

QM SIZE A COMPACT CONNECTOR

Tips to Read Polarization Code: polarization code can be read when connector is unmated, underneath the plug and receptacle.

Polarization Posts Under QMACN

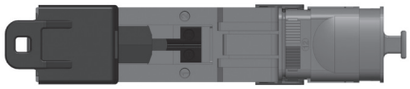

Polarization Keys Under QMADN

QM SIZE A & B CONNECTOR

Tips to Read Polarization Code: In order to properly read the polarization code, you can read the part number marked on the connector at the same time.

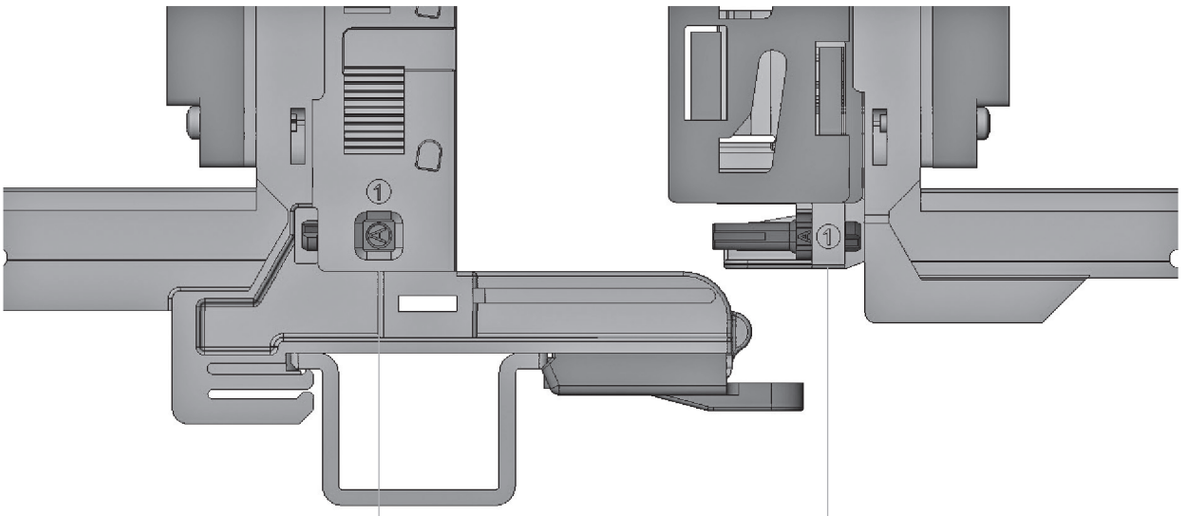

Code on Polarization Keys

Code on Polarization Posts

Connectors

QM SIZE A COMPACT SHELL DIMENSIONS

RECEPTACLE

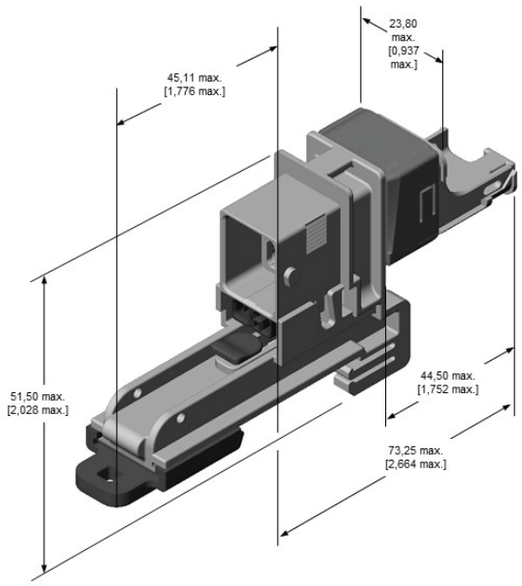

QMADN: 39 G

PLUG

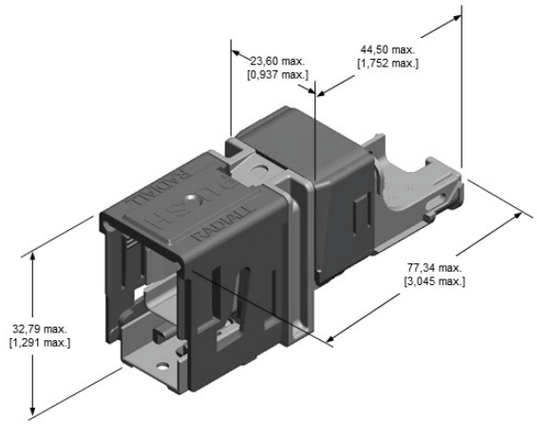

QMACN: 24 G

MATED PAIR

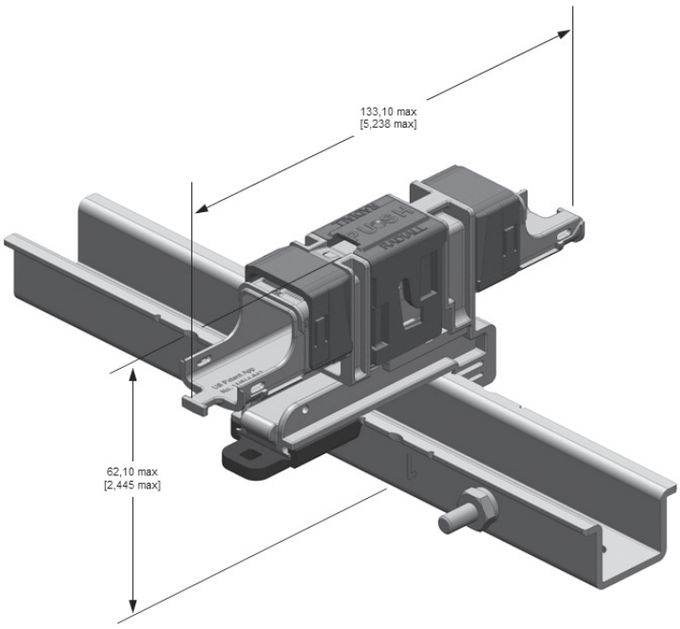

Connectors

QM SIZE A SHELL DIMENSIONS

RECEPTACLE

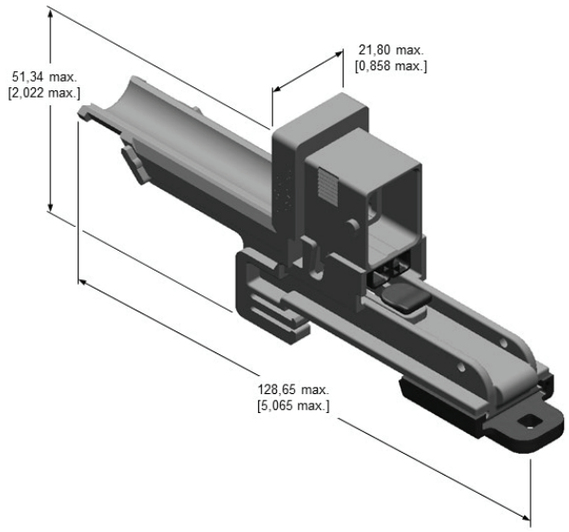

QMARN: 39 G
QMAZN: 45 G

PLUG

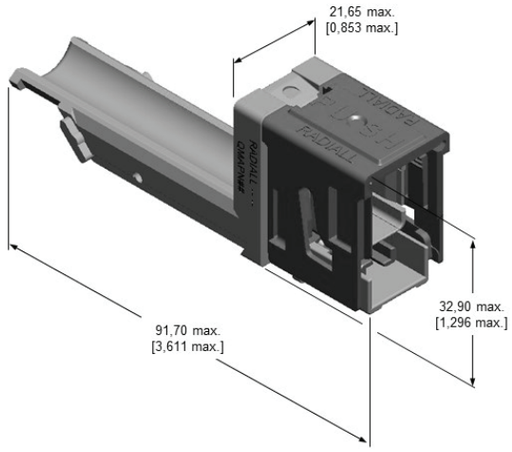

QMAPN: 24 G
QMAWN: 30 G

MATED PAIR

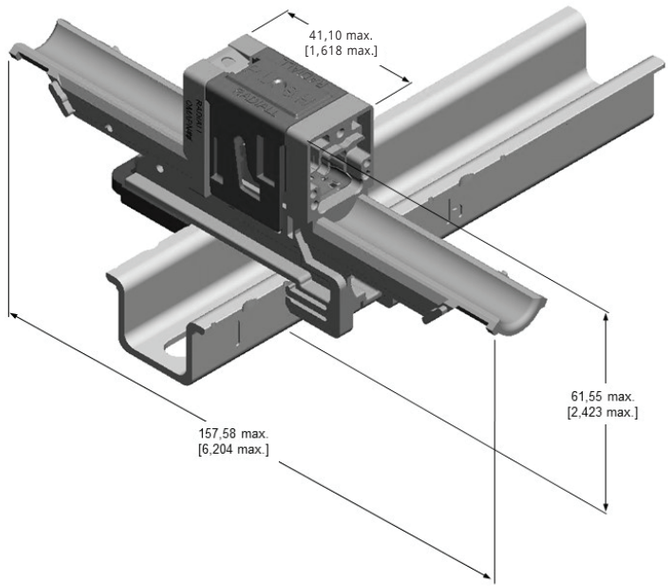

Connectors

QM SIZE B SHELL DIMENSIONS

RECEPTACLE

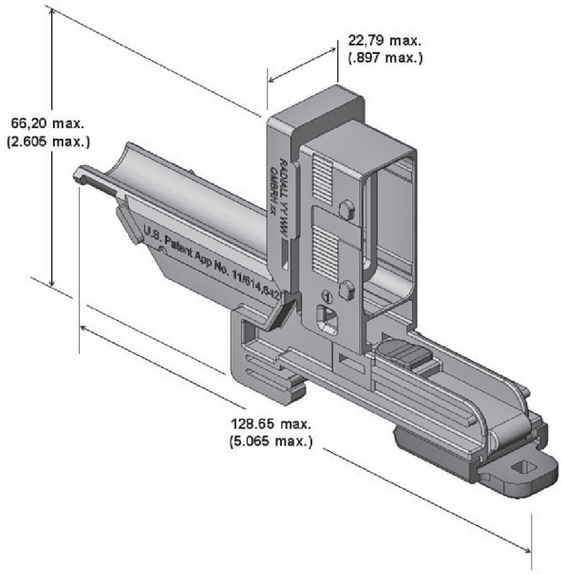

QMBRN: 42 G
QMBZN: 50 G

PLUG

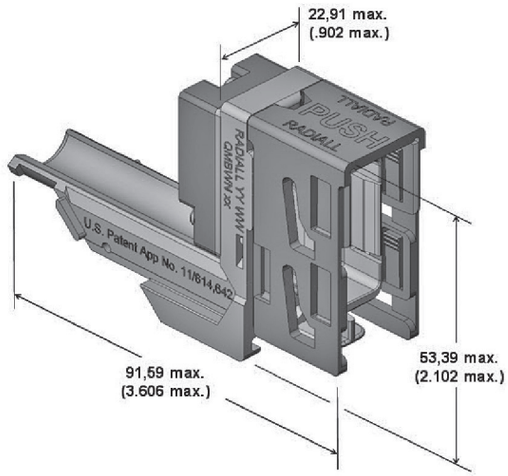

QMBPN: 31 G
QMBWN: 38 G

MATED PAIR

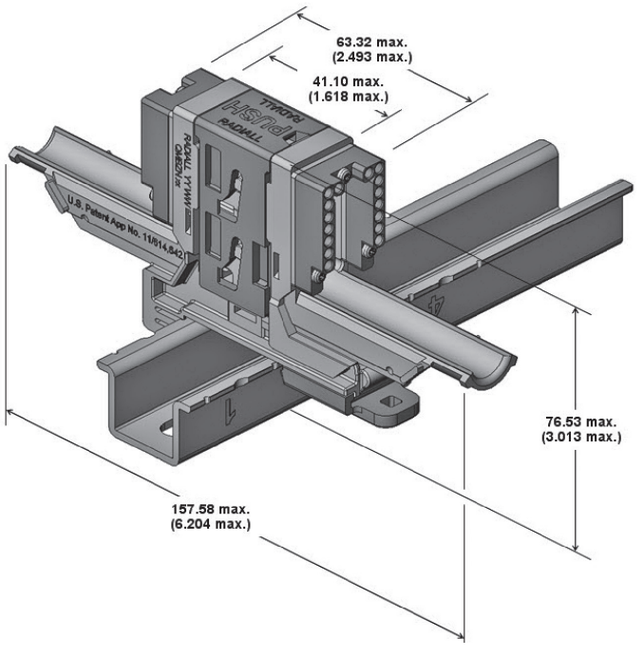

Accessories

HOW TO ORDER QM MOUNTING DEVICE

QM

SERIES PREFIX

MOUNTING DEVICE
L: L-Bracket
U: Single-sided rail
H: Double-sided rail

RAIL NAME
Refer to tables on page 2-28 for rail name.

MOUNTING DEVICE MATERIAL
A: Aluminium

FINISH
N: Nickel

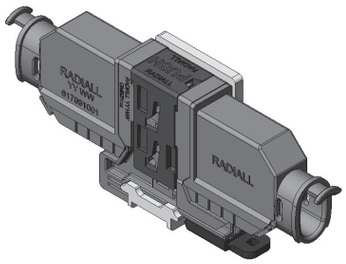

L-Bracket

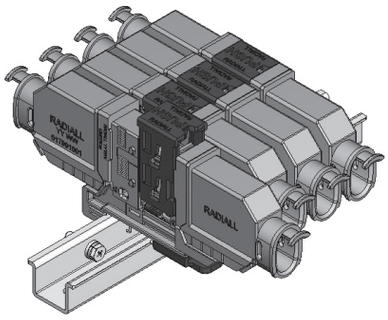

Single-Sided Rail [1]

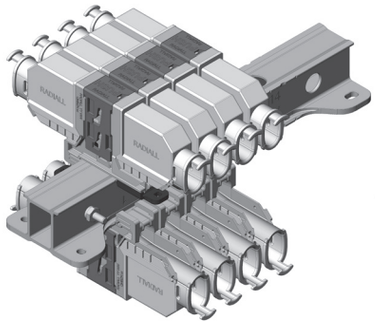

Double-Sided Rail

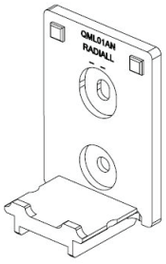

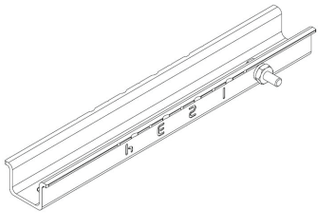

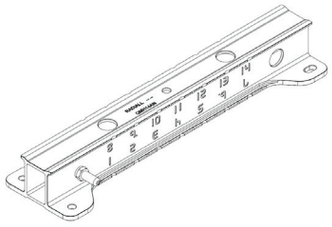

Notes
1. Single-sided rails are delivered with slot and ground stud.

Accessories

TOP VIEW

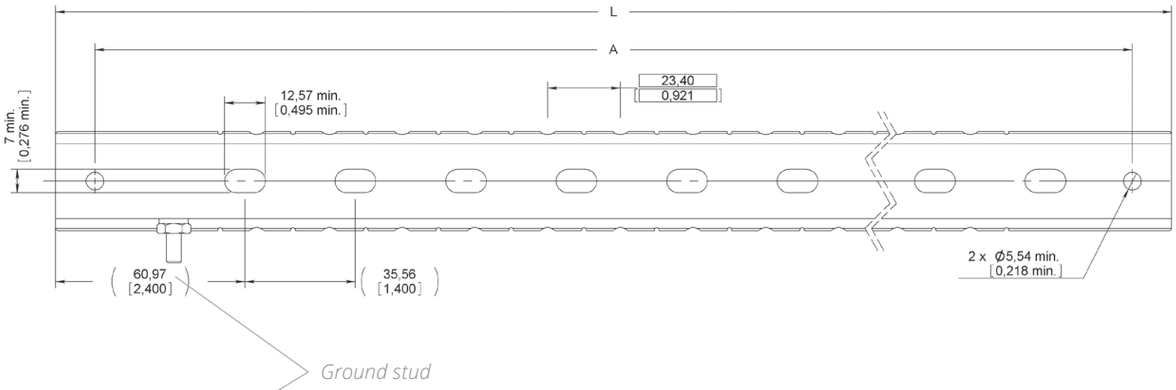

SIDE VIEW

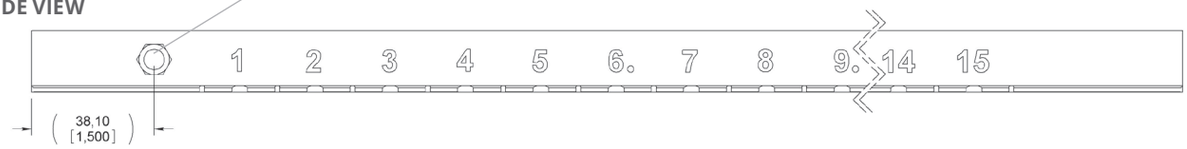

RAIL QM L-BRACKET

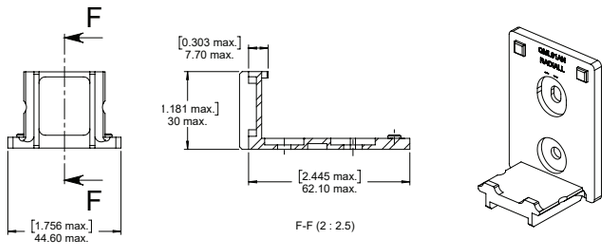

SINGLE-SIDED RAIL QM GENERAL

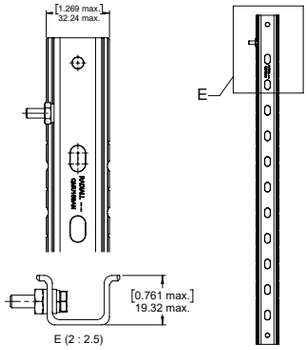

SINGLE-SIDED RAIL QM #22

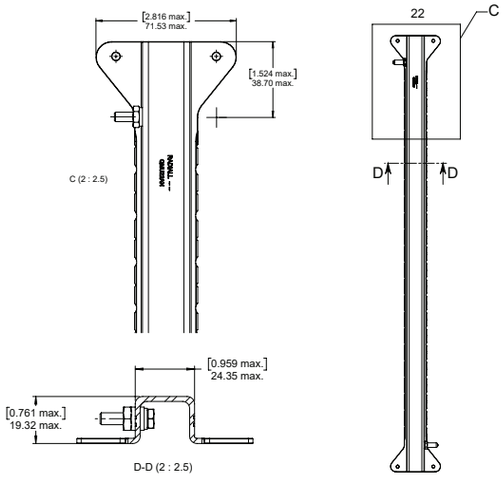

DOUBLE-SIDED RAIL QM

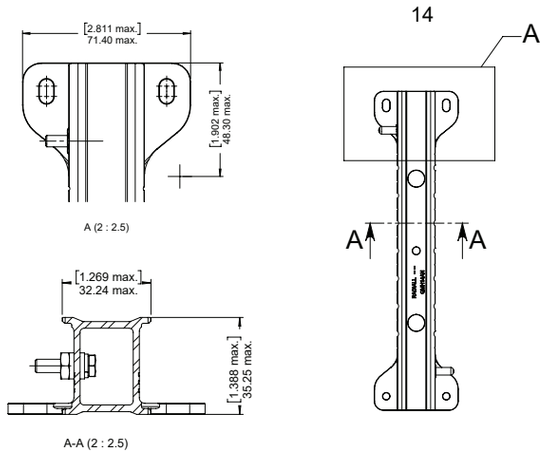

Accessories

DIMENSIONS OF MOUNTING DEVICES

RAIL NAME	NUMBER OF CONNECTOR POSITIONS	TYPE OF MOUNTING DEVICE	LENGTH MM MAX (INCH)	NUMBER OF GROUND STUDS	WEIGHT G (OZ)
01	1	L-Bracket	30 (1.181)	-	27 (0.95)
04M	4	Single	127 (5.000)	1	52 (1.83)
06M	6	Single	173.74 (6.840)	1	69 (2.43)
08M	8	Single	220.50 (8.681)	1	86 (3.03)
10M	10	Single	266.19 (10.48)	1	100 (2.53)
12M	12	Single	313.95 (12.360)	1	120 (4.23)
14M	14	Single	360.95 (14.211)	1	137 (4.83)
14	14	Double	270,76 (10,66)	2	263 (9.28)
16M	16	Single	407.67 (16.050)	1	156 (5.50)
16	16	Double	294,3 (11,58)	2	279 (9.84)
18M	18	Single	454.40 (17.890)	1	171 (6.03)
18	18	Double	317.5 (12.5)	2	298 (10.51)
20	20	Double	340.86 (13.42)	2	313 (11.04)
22	22	Single	621.54 (24.470)	2	261 (9.21)
22	22	Double	364.23 (14.34)	2	332 (11.71)
24	24	Double	387.6 (15.26)	2	351 (12.38)
26	26	Double	410.97 (16.18)	2	370 (13.05)
28	28	Double	434.34 (17.1)	2	370 (13.05)
30	30	Double	457.71 (18.02)	2	405 (14.29)
32	32	Double	481.33 (18.95)	2	424 (14.96)
34	34	Double	504.69 (19.87)	2	443 (15.63)
36	36	Double	528.06 (20.79)	2	462 (16.30)
38	38	Double	551.43 (21.71)	2	481 (16.97)
40	40	Double	574.8 (22.63)	2	499 (17.60)
42	42	Double	598.17 (23.55)	2	519 (18.31)
44	44	Double	621.54 (24.47)	2	540 (19.05)

Accessories

STRAIN RELIEFS & BACKSHELLS

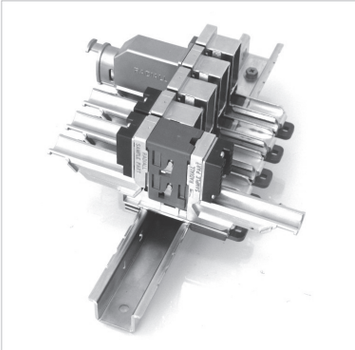

QM connectors can be equipped with backshells to provide complete shielding.

Backshells are compatible with plug and receptacle side. They provide EMI-RFI shielding specially needed in aircraft with a composite architecture. They are easy to install as they require no specific tools, and the backshells combine cost savings and high performances.

	PART NUMBER	DESCRIPTION
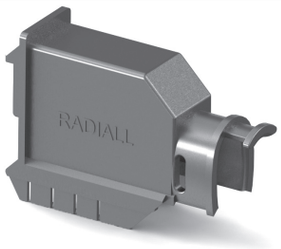	617 991 001	QM Size B EMI Backshell
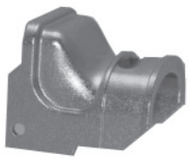	617 991 002	QM Size A Compact EMI Backshell
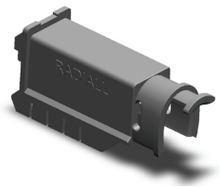	617 991 010	QM Size A EMI Backshell

Accessories

SPARE PARTS & TOOLS

	PART NUMBER	DESCRIPTION
	617 954 041	Dust Cap for QM Size B Plug
	617 954 042	Dust Cap for QM Size B Receptacle
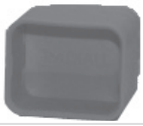	617 954 055	Dust Cap for QM Size A Plug and Receptacle
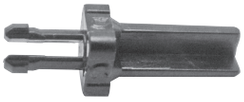	617 980 030	Polarization Post
	617 980 031	Polarization Key
	282 668 001	Tweezers for Polarizing Post and Key
	282 521 004	Right Angle Insert Extraction Tool
	F780 855 000	Hexagonal Key 5/64 in. (2 mm)/ Flats for Sleeve Holder Removal
	282 521 005	Insert Extraction Tool for EPXA Insert
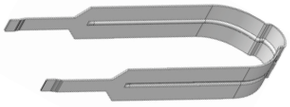	282 521 002	Insert Extraction Tool for EPXB Insert
	617 954 020	Plastic Box to Protect Wired Inserts During Handling
	282 515	Plastic Insert Extraction Tool for LuxCis® Termini (MIL M81 969/14-03)

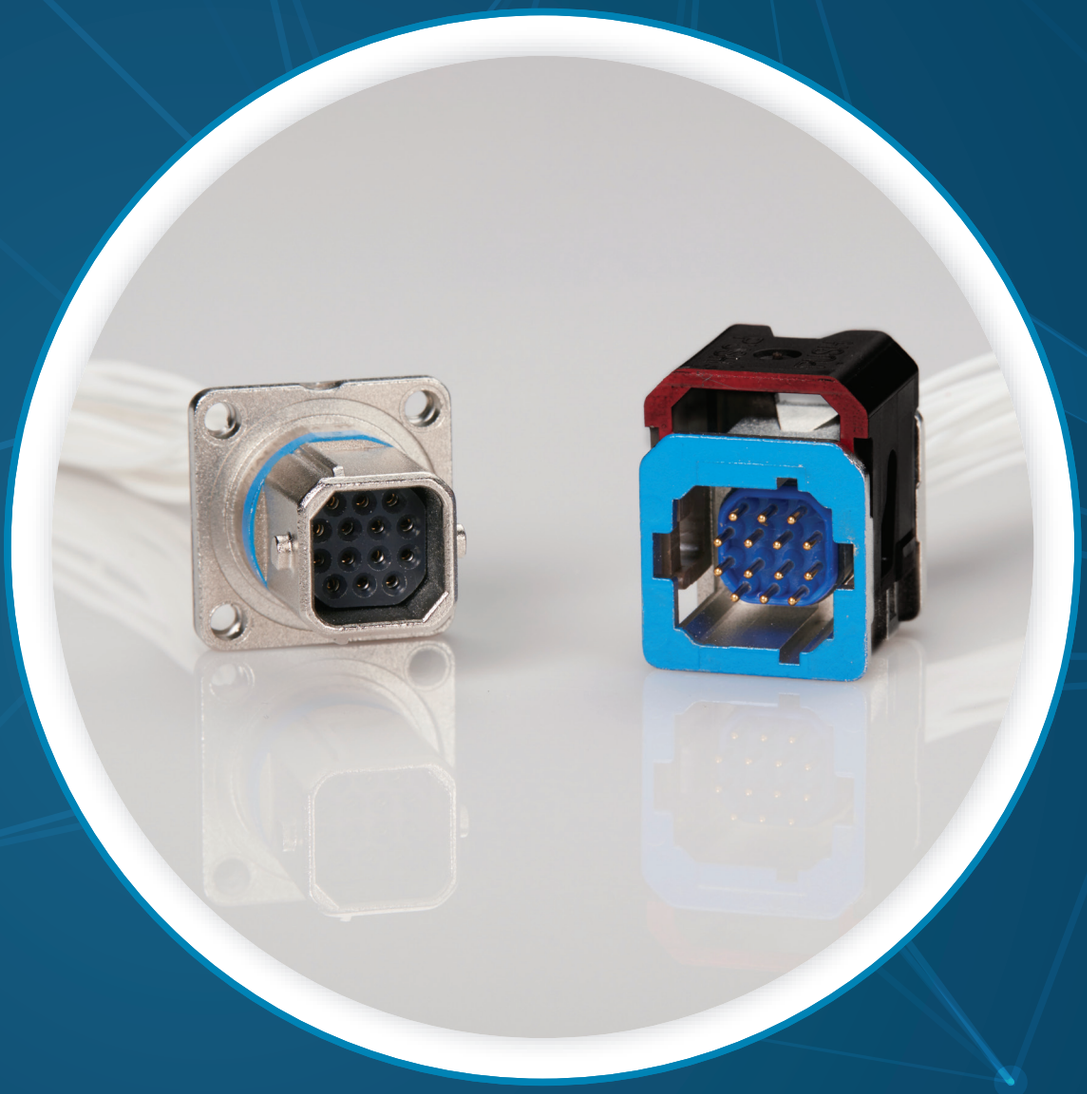

QUICKFUSIO™ SERIES

Section 3 Table of Contents

INTRODUCTION

Introduction ..... 3-2 to 3-3
Range Overview 3-4
Product Selection Guide 3-5

CHARACTERISTICS

Technical Characteristics ..... 3-6 to 3-7
Electrical Characteristics 3-6
Mechanical Characteristics 3-7
Environmental Characteristics 3-7
Product Overview 3-8

HOW TO ORDER

How to QuickFusio™ 3-9
Insert Overview 3-10
Electrical Contacts ..... 3-11 to 3-12

INSERTS

Tie-Wrap Ouput Positions, Contact Termination & Coding 3-13
Dimensions ..... 3-14 to 3-16
GigaBit Ethernet ..... 3-17 to 3-18
Weight - QuickFusio ..... 3-23 to 3-24
Weight - QuickFusio+ ..... 3-25 to 3-26

CONTACTS

LuxCis® Arinc Fiber Optic Contacts 3-19
Q-MTitian™ Fiber Optic Contacts 3-20
Accessories 3-21

SPARE PARTS & TOOLS

Spare Parts & Tools 3-22

INTRODUCTION

Radiall's experience in rectangular connectors and ability to design innovative solutions make the QuickFusio™ series the perfect miniature interconnect solution for cabin interiors and EWIS aerospace applications. Combining high performance with competitive costs, this lightweight, tool-less connector features The Radiall Touch: one finger mating - in a snap!

The QuickFusio™ series is a versatile range that covers any wiring systems including harness-to-harness and equipment-to-harness. The QuickFusio™ series is available in different shell styles in order to make installing the miniature connector in any aircraft area feasible.

PANEL MOUNT

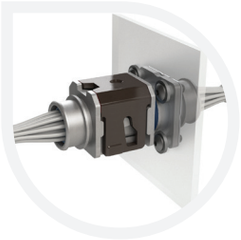

JAM NUT

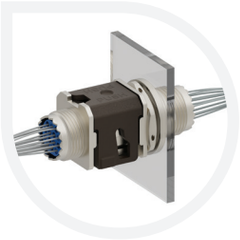

BOX MOUNT

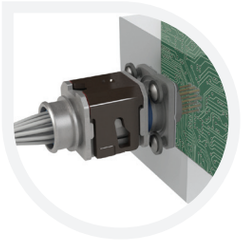

BUNDLE MOUNT

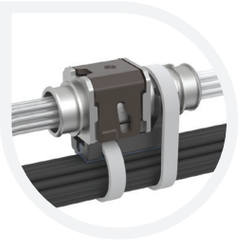

STRUCTURE MOUNT

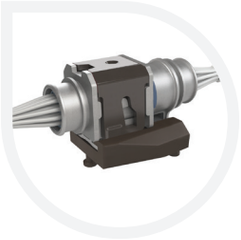

APPLICATIONS

The QuickFusio™ series is the perfect solution for major commercial aerospace and defense OEMs and is perfectly suited for:

- Cabin Interiors: In Flight Entertainment (IFE), Lighting, Seat Actuators, In-Seat Power Supply, Passenger Service Units (PSU)
- Electrical Wiring Systems (EWIS)
- Sensors

Introduction

FEATURES & BENEFITS

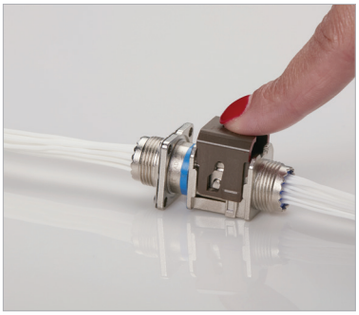

Competitive Cost

QuickFusio™ series is optimized to meet customer expectations in terms of competitive price positioning. The use of standard SAE-AS-38999 contacts in QuickFusio™ inserts and the unique mating mechanism enables quick mating and reduces overall cost.

Simple Wiring

By squaring a circle, Radiall has created an innovative design compatible with standard SAE-AS-38999 size 11 accessories. The unique design covers any type of wiring combination and is easy to install due to the Radiall Touch: one finger mating – in a snap!

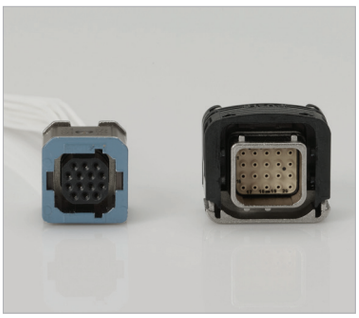

Lightweight Solution

Extremely compact, QuickFusio™ series is 20% lighter and 40% smaller than the competition. This small, dense solution eliminates wasted space and reduces the overall weight. QuickFusio™ is only 20 grams per pair when equipped with size 22 contacts.

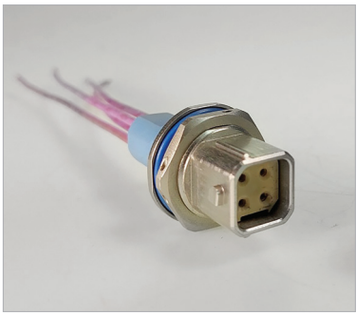

Easy Assembly

The jam nut features a simple and efficient installation process, reducing assembly time and labor costs. Its design allows for quick and straightforward attachment without the need for complex tools or procedures. This makes it ideal for environments where rapid installation and maintenance are essential, ensuring minimal downtime and increased productivity.

Introduction

RANGE OVERVIEW

PLUGS	RECEPTACLES (MATEABLE WITH ALL PLUGS)				
	Receptacle Outputs	*Square Flange Receptacle for Panel & Box Mount [1]*	*In-Line Receptacle & Platform for Bundle Mount*	*In-Line Receptacle & Platform for Structure Mount [2]*	*In-Line Jam Nut Receptacle for Panel & Box Mount*
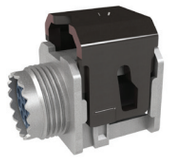 Threaded Accessory	Threaded Output				
	Banding Platform Output			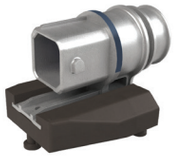	
Banding Platform	Banding Platform and Tie-Wrap Output	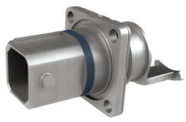			
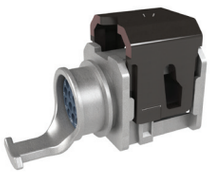 Banding Platform and Tie-Wrap	Short Receptacle Output with Straight PC Tail Contacts				
	Short Receptacle Output with Right Angle PC Tail Contacts	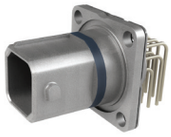			

Notes

1. *Sealed square flange versions will soon complete the existing square flange receptacle range. Please contact your local representative for additional information.*
2. *Shell style not yet available. Please contact your local representative for additional information.*

Introduction

PRODUCT SELECTION GUIDE

TWO INNOVATIVE SOLUTIONS TO MEET CUSTOMERS' NEEDS

To meet all customers' needs and expectations, the QuickFusio™ series is available in two different versions: QuickFusio and QuickFusio+.

- The QuickFusio connector offers the perfect balance between extreme competitive cost and performance needed in pressurized environments, especially in cabin applications.
- Qualified in accordance to EWIS standard, the QuickFusio+ connector meets even more stringent requirements and is suitable for both pressurized and non-pressurized environments.

To choose your connector, determine your performance requirements below:

PERFORMANCE	QUICKFUSIO	QUICKFUSIO+
Operating Temperature	-55 °C to +125 °C (-67 °F to +257 °F)	-65 °C to +175 °C (-85 °F to +347 °F)
Altitude Immersion	No Sealing	55,000 ft
DWV at 70,000 ft (Mated Connector)	325 Vrms	1,000 Vrms
Salt Spray	48 h	96 h
Vibrations	20 g Sinus - 4 Hours on each of the 3 Axis	27.8 grms - 8 Hours on each of the 3 Axis
Lightning Strike	N/A	5 KA - 1,600 V
Shell to Shell Conductivity	10 mΩ max	2.5 mΩ max

HOW TO DIFFERENTIATE YOUR CONNECTORS?

QUICKFUSIO

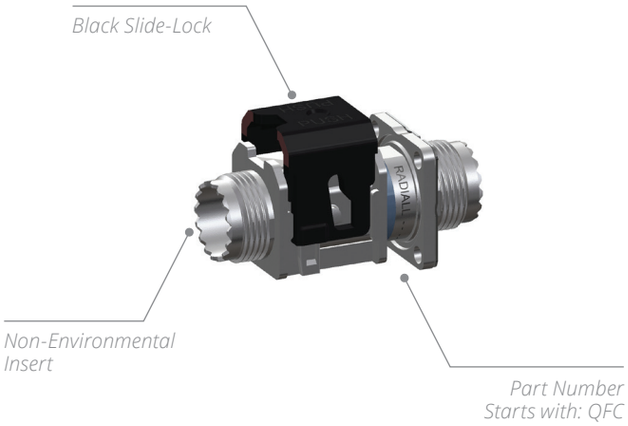

QUICKFUSIO+

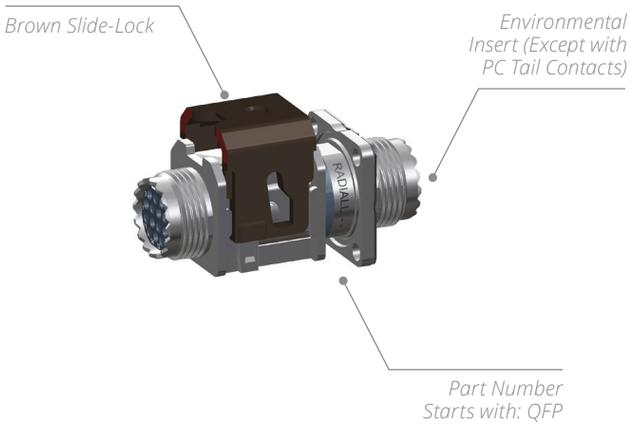

Characteristics

TECHNICAL CHARACTERISTICS

ELECTRICAL CHARACTERISTICS

			QuickFusio	*QuickFusio+*
	CONTACT SIZE	**CABLE GAUGE**	**MAX CURRENT AMPS (A)**	**MAX CURRENT AMPS (A)**
CURRENT RATING	23	AWG22	5	5
		AWG24	3	3
		AWG26	2	2
	22	AWG22	5	5
		AWG24	3	3
		AWG26	2	2
	20	AWG20	7.5	7.5
		AWG22	5	5
		AWG24	3	3
	16	AWG16	13	13
		AWG18	10	10
		AWG20	7.5	7.5
	12	AWG12	23	23
		AWG14	17	17
		AWG16	13	13

			QuickFusio	*QuickFusio+*
DIELECTRIC WITHSTANDING VOLTAGE (DWV)	At Sea Level	All Inserts	1,500 Vrms	1,500 Vrms
		Insert 22	1,000 Vrms	1,300 Vrms
		Insert Q1	N/A	1,000 Vrms
	At 70,000 ft	All inserts	325 Vrms	1,000 Vrms
		Insert 22	125 Vrms	325 Vrms
		Insert Q1	N/A	125 Vrms
INSULATION RESISTANCE	Ambient Temperature		> 5,000 MΩ	> 5,000 MΩ
	At High Temperature		> 200 MΩ at 125 °C	> 200 MΩ at 175 °C
LIGHTNING STRIKE	Current Pulse		N/A	5KA
	Voltage Pulse		N/A	1,600 V

		QuickFusio	*QuickFusio+*
EMI SHIELDING EFFECTIVENESS	**FREQUENCY (MHz)**	**LEAKAGE ATTENUATION (dB)**	**LEAKAGE ATTENUATION (dB)**
	100	65	65
	200	63	63
	300	63	63
	400	62	62
	500	60	60
	600	55	55
	800	50	50
	1000	50	50

	QuickFusio	*QuickFusio+*
SHELL TO SHELL CONDUCTIVITY	10 mΩ max	2.5 mΩ max
MAGNETIC PERMEABILITY	< 2 μ	< 2 μ

Characteristics

MECHANICAL CHARACTERISTICS

		QuickFusio		*QuickFusio+*	
	CONTACT SIZE	**RETENTION FORCE**	**MAX DISPLACEMENT**	**RETENTION FORCE**	**MAX DISPLACEMENT**
CONTACT RETENTION	23	44 N	0.30 mm	44 N	0.30 mm
	22	44 N		44 N	
	20	67 N		67 N	
	16	110 N		110 N	
	12	110 N		110 N	

	CONTACT SIZE	**MAXIMUM INSERTION FORCE**	**MAXIMUM EXTRACTION FORCE**	**MAXIMUM INSERTION FORCE**	**MAXIMUM EXTRACTION FORCE**
CONTACT INSERTION EXTRACTION FORCE	23	44 N	44 N	44 N	44 N
	22	44 N	44 N	44 N	44 N
	20	89 N	89 N	89 N	89 N
	16	89 N	89 N	89 N	89 N
	12	133 N	133 N	133 N	133 N

			QuickFusio	*QuickFusio+*
MECHANICAL ENDURANCE			500 Mating Cycles	500 Mating Cycles
VIBRATIONS	Square Flange Receptacle and Universal Plugs	Electrical and Optical Contacts	Acceleration 20 g Sinus (4 Hours on each of the 3 Axis) EN 2591 - 403	Acceleration 27.8 g (8 Hours on each of the 3 Axis) EN 2591 - 403
		Quadrax Contact	N/A	Acceleration 16.91 g (8 Hours on each of the 3 Axis) EN 2591 - 403
	In-Line Receptacle and Universal Plugs	-	Acceleration 11.33 g [1] RTCA-DO-160G Test Curve E1	Acceleration 11.33 g [1] RTCA-DO-160G Test Curve E1 Windmilling & High Power Test
SHOCK - 3 SHOCKS ON EACH AXIS			Shock Amplitude 50 Half Sinus/ Duration 11 ms	Shock Amplitude 50 Half Sinus/ Duration 11 ms
INSERT RETENTION IN SHELL			254 N	254 N

ENVIRONMENTAL CHARACTERISTICS

	QuickFusio	*QuickFusio+*
OPERATING TEMPERATURE	-55 °C to +125 °C (-67 °F to +257 °F)	-65 °C to +175 °C (-85 °F to +347 °F)
TEMPERATURE LIFE	1,000 Hours at 125 °C	1,000 Hours at 175 °C
SALT SPRAY	48 Hours	96 Hours
ALTITUDE IMMERSION (ALL INSERTS EXCEPT 22)	No Sealing	55,000 ft
SEAL LEAKAGE (CLASS B) - INSERT 22	N/A	Resistant to Running Water
FLAMMABILITY	EN 2591-317 FAR 25,853	EN 2591-317 FAR 25,853
SMOKE AND TOXICITY	EN 2591-317 FAR 25,853 (F)	EN 2591-317 FAR 25,853 (F)

Notes

1. Minimum level validated by Radiall, other levels can be tested on demand.

Inserts

PRODUCT OVERVIEW

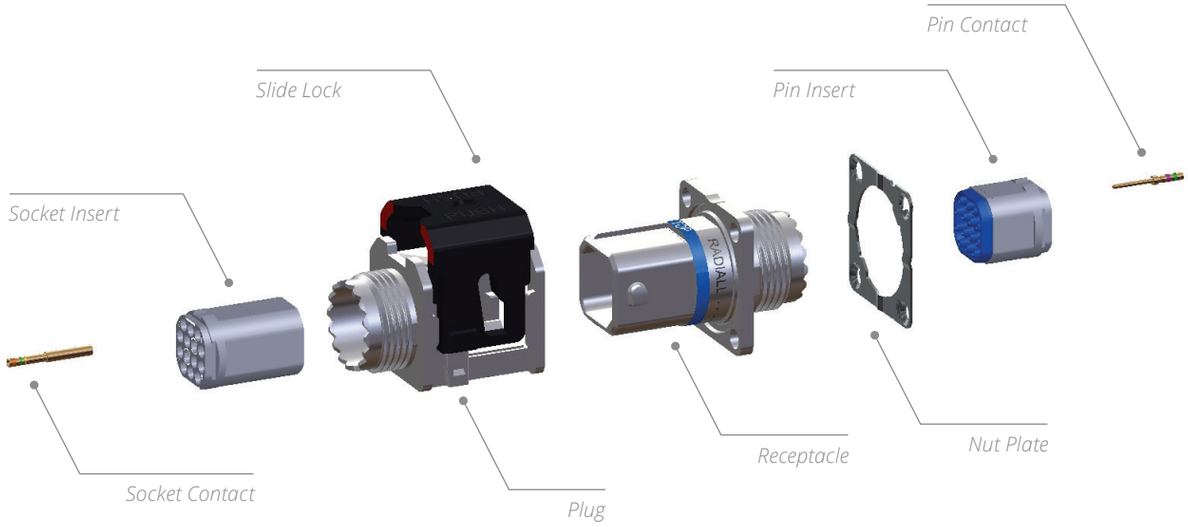

MATERIALS AND PLATING

Plug and Receptacle

- Shell: high grade thermoplastic (nickel-plated)
- Insert retention clip: beryllium copper
- Slide lock (plug): high grade thermoplastic
- Nut plate (receptacle): stainless steel

Insert

- Grommet and interfacial seal: fluorosilicone elastomer
- Insulators: high grade thermoplastic
- Retention clip: metallic

Contacts

- Copper alloy, gold-plated over nickel

Bundle Mount Platform (For In-Line Receptacle)

- Silicone pad: silicone rubber
- Cradle: high grade thermoplastic

How To Order

HOW TO ORDER QUICKFUSIO™

QuickFusio™ is delivered fully assembled including the shell, with insert mounted and with or without contacts based on your selection.

Tips to help you in your selection:

- QuickFusio+ connectors are fitted with environmental inserts (except for short receptacles with PC tail contacts which are fitted with non-environmental inserts).
- QuickFusio connectors are always fitted with non-environmental inserts.
- For crimp contacts, you can use either pin or socket inserts in QuickFusio and QuickFusio+ plugs or receptacles (however, if scoop proof option is needed, please use pin inserts in receptacles).
- PC tail contacts are only available as pin PC tail contacts in short receptacle rear output (if PC tails are selected then all the cavities are populated).
- Short receptacle is dedicated to PC tail terminations. If crimp contacts are needed in short receptacle, please ask your local representative.

QFC

SERIES PREFIX
QFC: QuickFusio
QFP: QuickFusio+

SHELL SIZE
5: One size available

SHELL TYPE [1]
PN: Plug (nickel-plated)
RN: Square flange receptacle (nickel-plated)
WN: In-Line receptacle (nickel-plated) with bundle mount platform
LN: In-Line receptacle (nickel-plated) without platform
JM: Jam nut receptacle (alu nickel-plated - QuickFusio only) [9]

REAR OUTPUT
1: Short receptacle [2]
2: Accessory thread
3: Banding platform
A: Banding platform and tie-wrap (orientation 0°) [1]

INSERT CLASS [3]
N: Non-environmental (without grommet, always the interfacial seal on pin insert)
E: Environmental (for QuickFusio+ only)

INSERT NAME
Refer to page 3-10 to select your insert name.

INSERT TYPE [4]
P: Pin inserts
S: Socket inserts

CONTACT TERMINATION [5]
X: Contact not supplied with the connector
S: Crimp contacts are supplied with connector
YB: Gold finish straight PC tail contacts [6] [7] [8]
GB: Gold finish right angle PC tail contacts [6] [7] [8]
RB: Pure tin straight PC tail contacts [6] [7] [8]
TB: Pure tin right angle PC tail contacts [6] [7] [8]

CODING
Refer to page 3-13 to select your coding (A to N).

Notes

1. For other options, please contact your local representative
2. Not available with shell types WN and LN
3. Refer to the table to the right to select your insert class.
4. For F4 insert: pin inserts only available on plug side and socket inserts with sleeve holder on receptacle side.
5. Size 8 and optical contacts must be ordered separately
6. F4 and Q1 inserts are not available with PC tail contacts
7. Only available with short receptacle rear output [1]
8. Refer to page 3-13 for PC tail lengths
9. Jam nut only available with: rear output 2 & 3 / Insert N / Contact termination X

CONTACT TERMINATION	QUICKFUSIO	QUICKFUSIO+	
	NON-ENVIRONMENTAL	NON-ENVIRONMENTAL	ENVIRONMENTAL
X	√	-	√
S	√	-	√
YB to TB	√	√	-

How To Order

INSERT OVERVIEW

NON-ENVIRONMENTAL INSERTS

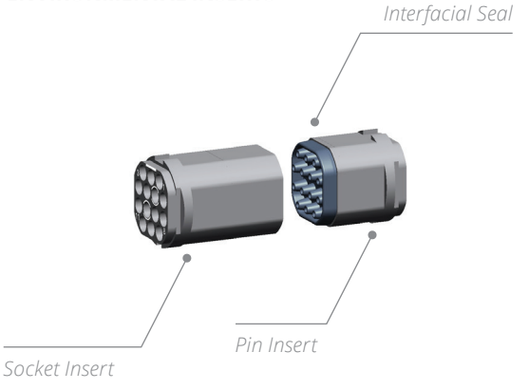

ENVIRONMENTAL INSERTS

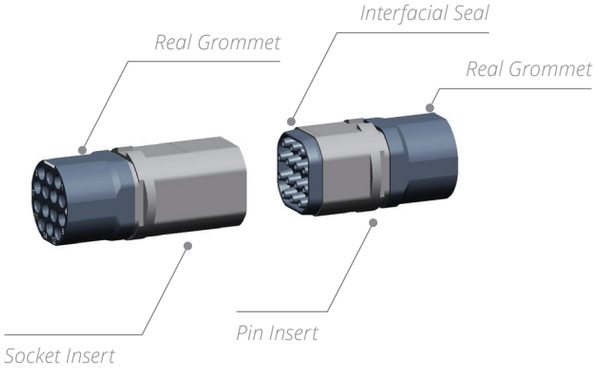

INSERT ARRANGEMENTS

Except for F4 and Q1 inserts, all inserts are available in environmental and non-environmental versions.

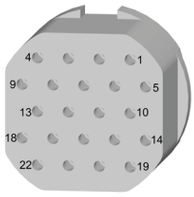	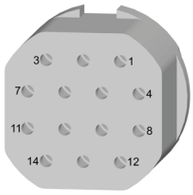	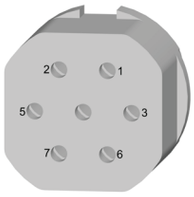	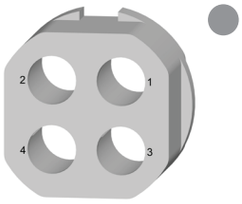
Insert Name 22 22 × Size 23 Contacts	**Insert Name 14** 14 × Size 22 Contacts	**Insert Name 07** 7 × Size 20 Contacts	**Insert Name F4** 4 × LuxCis® Arinc 801 Contacts
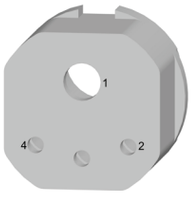	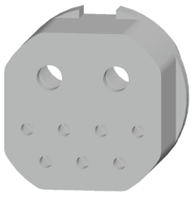	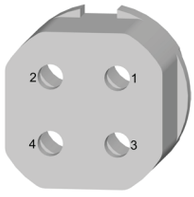	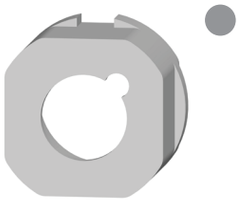
Insert Name M4 3 × Size 20 Contacts 1 × Size 12 Contact	**Insert Name M9** 2 × Size 16 Contacts 7 × Size 22 Contacts	**Insert Name 04** 4 × Size 16 Contacts	**Insert Name Q1** 1 × Size 8 Quadrax Contact
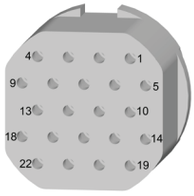	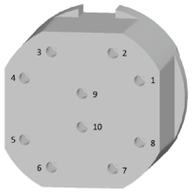		
Insert Name IG For 1 Gb/s Ethernet Applications	**Insert Name XG** For 10 Gb/s Ethernet Applications [1]		

● Insert Only Available:
- In environmental version
- With accessory thread or banding plaform rear output shell

Notes

1. To order insert XG, please contact your local representative.

How To Order

ELECTRICAL CONTACTS

QuickFusio™ connectors use highly standardized contacts per SAE-AS39029 and EN3155:

- Signal and power contacts
- High frequency with coax, twinax and triax contacts
- Ethernet links with quadrax contacts
- Fiber optic

CONTACT SIZE	WIRE SIZE	TYPE	RADIALL PART NUMBER	STANDARD PART NUMBER	CRIMPING TOOL	POSITIONER	INS./EXT. TOOL	TYPE OF TOOL
23	AWG22 AWG24 AWG26	Pin	670210	N/A	282281 M22520/2-01	282581019	282549049 M81969/1-05	Metal
		Socket	670310	N/A				
22	AWG22 AWG24 AWG26	Pin	670200	M39029/58-360 EN3155-008P2222	282281 M22520/2-01	282562 M22520/2-09	282522 M81969/14-01	Plastic
		Socket	670350	M39029/57-354 EN3155-003S2222				
20	AWG20 AWG22 AWG24	Pin	670220	M39029/58-363 EN3155-008P2020	282291 M22520/1-01	282567 M22520/1-04	282549029 M81969/14-10	Plastic
		Socket	670370	M39029/57-357 EN3155-003S2020				
16	AWG16 AWG18 AWG20	Pin	670230	M39029/58-364 EN3155-008P1616	282291 M22520/1-01	282567 M22520/1-04	282515 M81969/14-03	Plastic
		Socket	670380	M39029/57-358 EN3155-003S1616				
12	AWG12 AWG14 AWG16	Pin	670240	M39029/58-365 EN3155-008P1212	282291 M22520/1-01	282567 M22520/1-04	282549004 M81969/14-04	Plastic
		Socket	670390	M39029/57-359 EN3155-003S1212				

DOUBLE CRIMPING CONTACTS

To meet the requirement for double crimping—crimping two wires into the same contact—Radiall offers contacts with enlarged barrels compatible with the QuickFusio™ connector. This solution increases the number of connections through an existing connector without increasing contact density or adding an additional connector.

Please contact your representatives for any inquiries or requirements related to this exclusive solution.

QUADRAX CRIMP CONTACTS

CONTACT SIZE	WIRE SIZE	CLASS	TYPE	RADIALL PART NUMBER	EXTRACTION TOOL	TYPE OF TOOL
8	NF24Q100	Environmental	Pin	670175012	282549001 M81969/28-03 or M81969/14-06	Metal
			Socket	670075012		
	NF26Q100	Environmental	Socket	670075029		
		Non-Environmental	Socket	670075028		
	ABS1503KD24	Environmental	Pin	670175023		
			Socket	670075023		

QuickFusio is also compatible with coaxial contacts EN3155-067 and EN3155-068.

TRIAX CONTACTS

QuickFusio™ is compatible with triax contacts per EN3155-012; EN3155-024; EN3155-013 and EN3155-025.

How To Order

COAXIAL CRIMP CONTACTS

CONTACT SIZE	WIRE SIZE	CLASS	TYPE	RADIALL PART NUMBER	EXTRACTION TOOL	TYPE OF TOOL
8	EN4604-010 (KX)	Non-Environmental	Pin	670101007	282549001 M81969/28-03 or M81969/14-06	Metal
			Socket	670001007		
16	Contacts per MIL DTL 38999					

QUICKFUSIO 6 COAX SOLUTION

In response to the increasing demand for high-frequency transfer solutions in compact settings, Radiall presents the new QuickFusio™ 6 GHz multicoax connector, which features an advanced sealing mechanism for improved reliability, requires no special tools for easy installation, and boasts a design that is 80% denser and 60% lighter, ultimately reducing overall project costs by streamlining the installation process.

The key benefits of the 6 coax include its high data rate, supporting up to 6 Gb/s, and its high density, enabling the transmission of 6x 6 Gb/s within a QuickFusio connector.

Please contact your representatives for any inquiries or requirements related to this exclusive solution.

Inserts

TIE-WRAP OUTPUT POSITIONS, CONTACT TERMINATIONS & CODING

TIE-WRAP OUTPUT ANGULAR POSITIONS

For tie-wrap output orientation 90°, 180° or 270° please contact your local representative for additional information.

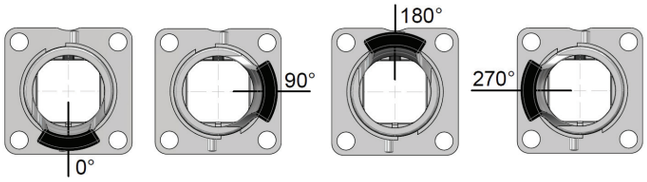

CONTACT TERMINATION

STRAIGHT PC TAIL CONTACT TERMINATION SIZE #23 TO SIZE #12 CONTACTS			
MINI LENGTH E MM (INCH)	MINI LENGTH H MM (INCH)	GOLD	PURE TIN (ROHS)
14.25 (0.561)	7.42 (0.292)	YB	RB

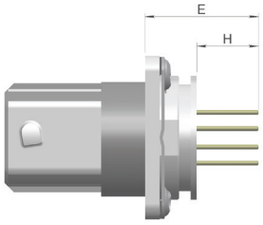

RIGHT ANGLE PC TAIL CONTACT TERMINATION SIZE #23 TO SIZE #12 CONTACTS			
MINI LENGTH E MM (INCH)	MINI LENGTH H MM (INCH)	GOLD	PURE TIN (ROHS)
12.19 (0.480)	4.43 (0.174)	GB	TB

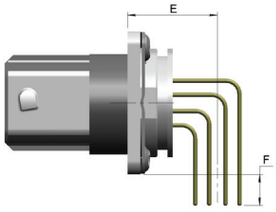

CODING

The QuickFusio™ series is available in 6 different codings through specific mechanical shapes. Each of these mechanical codings is associated with one particular color, which enables quick and easy wiring. One universal N coding, mateable with the 6 other codings, is also available.

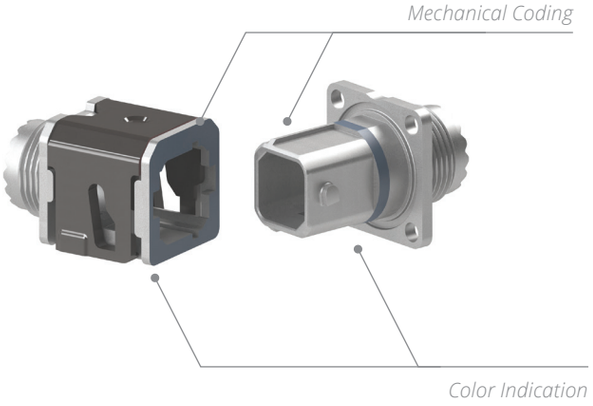

	CODING A	CODING B	CODING C	CODING D	CODING E	CODING F	CODING N UNIVERSAL CODING
Color and Mechanical Shape Coding					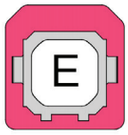	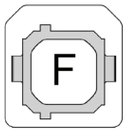	

Inserts

DIMENSIONS

PLUGS - QUICKFUSIO AND QUICKFUSIO+ (PN)

FRONT VIEW OF THE CONNECTOR

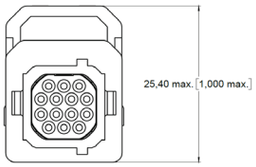

Slide Open

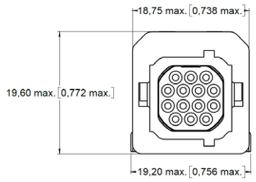

Slide Closed

STANDARD DIMENSIONS

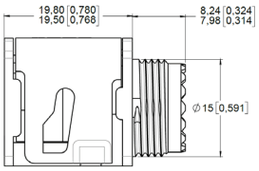

Rear Output #2
Accessory Thread

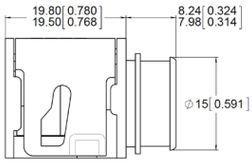

Rear Output #3
Banding Platform

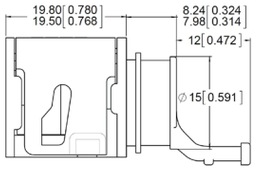

Rear Output #A
Banding Platform
and Tie-Wrap

STANDARD DIMENSIONS FOR ENVIRONMENTAL INSERTS F4 AND Q1

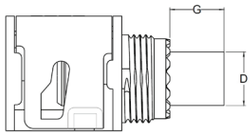

Rear Output #2
Accessory Thread

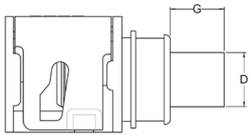

Rear Output #3
Banding Platform

INSERT NAME	GROMMET PROTRUSION (G) MAX MM (INCH)	GROMMET DIAMETER (D) MAX MM (INCH)
F4	9.50 (0.37)	10.95 (0.43)
Q1	3.50 (0.14)	11.25 (0.44)

Notes
Other inserts do not have grommet protrusion.

Inserts

SQUARE FLANGE RECEPTACLES QUICKFUSIO AND QUICKFUSIO+ (RN)

FRONT VIEW OF THE CONNECTOR

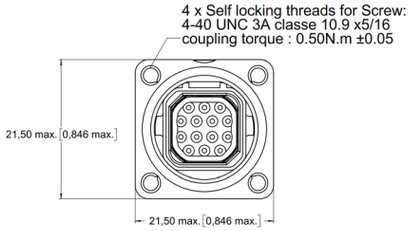

PANEL CUT-OUT

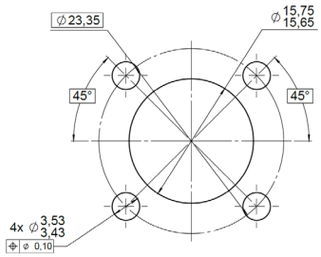

STANDARD DIMENSIONS

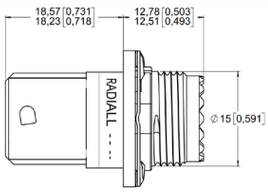

Rear Output #2
Accessory Thread

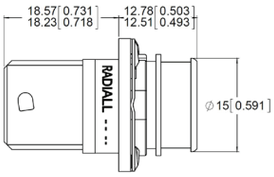

Rear Output #3
Banding Platform

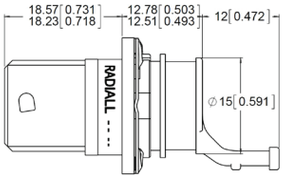

Rear Output #A
Banding Platform
and Tie-Wrap

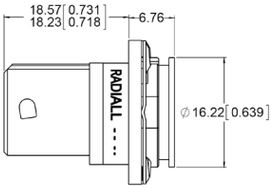

Rear Output #1
Short Receptacle

STANDARD DIMENSIONS FOR ENVIRONMENTAL INSERTS F4 AND Q1

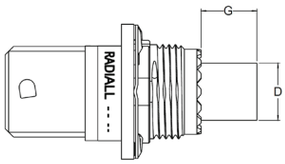

Rear Output #2
Accessory Thread

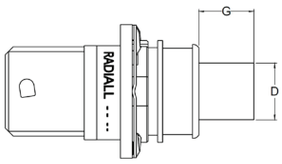

Rear Output #3
Banding Platform

INSERT NAME	GROMMET PROTRUSION (G) MAX MM (INCH)	GROMMET DIAMETER (D) MAX MM (INCH)
F4	9.50 (0.37)	10.95 (0.43)
Q1	3.50 (0.14)	11.25 (0.44)

Notes
Other inserts do not have grommet protrusion.

Inserts

IN LINE RECEPTACLES QUICKFUSIO AND QUICKFUSIO+ (WN, LN AND JM)

FRONT VIEW OF THE CONNECTOR

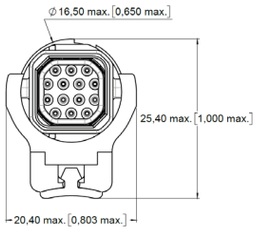

BUNDLE MOUNT PLATFORM

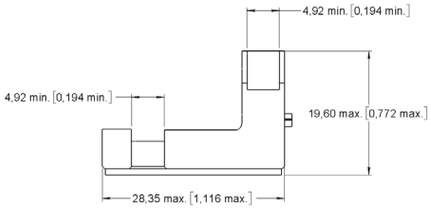

STANDARD DIMENSIONS

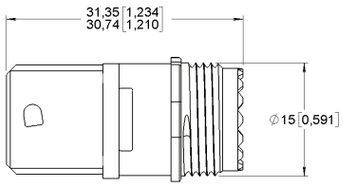

Rear Output #2
Accessory Thread

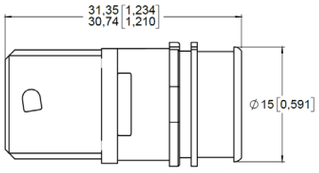

Rear Output #3
Banding Platform

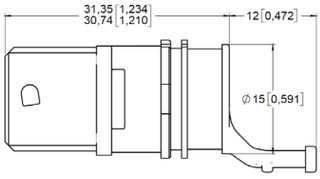

Rear Output #A
Banding Platform
and Tie-Wrap

STANDARD DIMENSIONS FOR ENVIRONMENTAL INSERTS F4 AND Q1

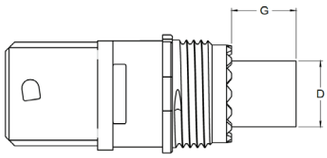

Rear Output #2
Accessory Thread

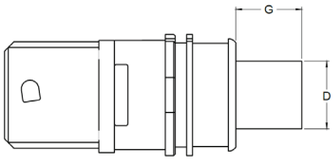

Rear Output #3
Banding Platform

INSERT NAME	GROMMET PROTRUSION (G) MAX MM (INCH)	GROMMET DIAMETER (D) MAX MM (INCH)
F4	9.50 (0.37)	10.95 (0.43)
Q1	3.50 (0.14)	11.25 (0.44)

JAM NUT RECEPTACLE

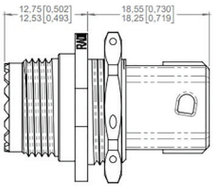

Rear Output #2
Accessory Thread

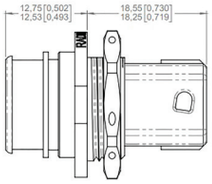

Rear Output #3
Banding Platform

PANEL CUT-OUT

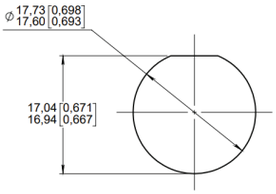

Notes

Other inserts do not have grommet protrusion.

Inserts

GIGABIT ETHERNET

To respond to the growing demand in civil aerospace for faster digital networks, Radiall has combined Gigabit Ethernet protocols into a miniature connector, opening new perspectives for cabin and avionics networks. To meet customers' every expectations, Radiall developed two different solutions:

- *A 10 Gb/s offer*
- *A 1 Gb/s offer*

I. QUICKFUSIO™ 10 GB/S

Available with QuickFusio and QuickFusio+

QuickFusio™ 10 Gb/s meets cat6A requirements following TIA568 C.2 specification and offers excellent high frequency and digital performance. Capitalizing on its expertise and ability to innovate, Radiall specifically designed a new insert called XG, which provides efficient crosstalk shielding between the pairs of cables.

Insert XG Contact Mapping

QuickFusio™ 10 Gb/s was successfully tested with cables measuring up to 68 meters fitted with 6 QuickFusio connections. The results shown below concern a set-up based on Arinc 800 part 4 specification, tested with a Gore Ethernet cable RCN9047-26 equipped as follow [1]:

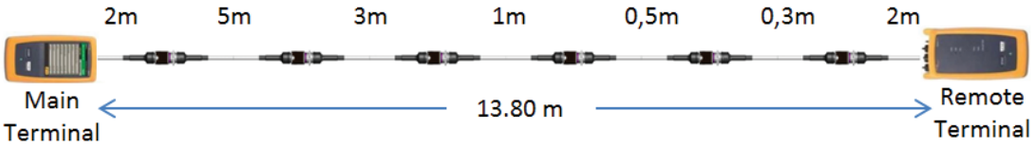

They proved QuickFusio™ 10 Gb/s to effectively minimize crosstalk, prevent perturbation from the environment, ensure reliability and maintain signal integrity.

Transmission Characteristics:

EYE DIAGRAM

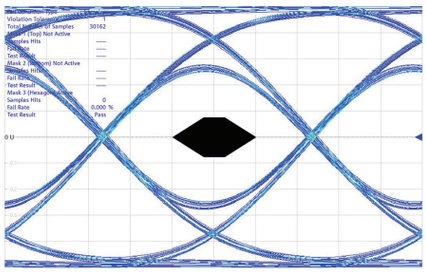

NEAR-END CROSSTALK (NEXT):

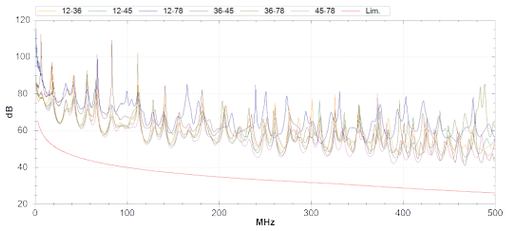

INSERTION LOSS (IL):

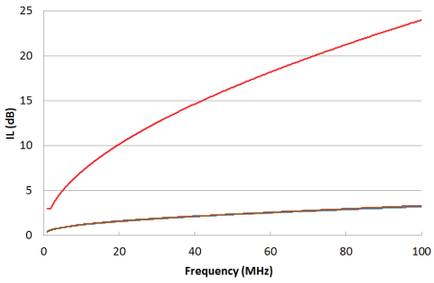

RETURN LOSS (RL):

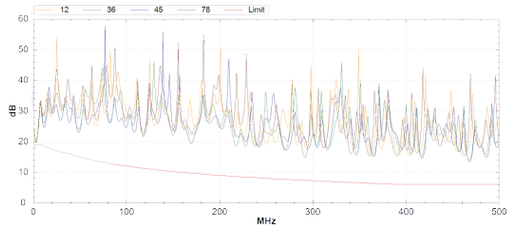

Notes

Test reports are available upon request.

1. For specific information on the Ethernet offer for QuickFusio™ equipped with PC tail contacts, please ask your local representative.

Inserts

II. QUICKFUSIO™ 1 GB/S

The 1 Gb/s offer passes the Ethernet cat5e performance level due to a specific layout configuration developed in the insert IG, which preserves the signal integrity while minimizing crosstalk, insertion loss and return loss effects.

Single Ethernet cable configuration (available with QuickFusio and QuickFusio+)

The single Ethernet configuration was tested with the same configuration (based on Arinc 800 part 4 specification) as QuickFusio™ 10 Gb/s. [1]

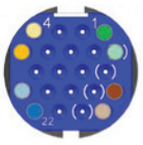

Insert IG Contact Mapping

Transmission Characteristics:

NEAR-END CROSSTALK (NEXT):

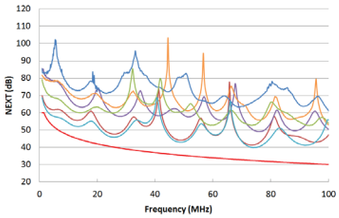

INSERTION LOSS (IL):

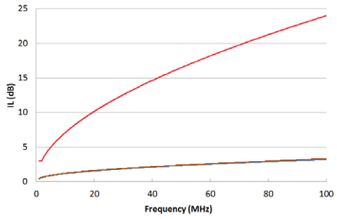

RETURN LOSS (RL):

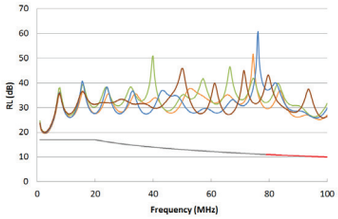

DOUBLE ETHERNET CABLE CONFIGURATION (AVAILABLE WITH QUICKFUSIO)

For this insert layout, the following configuration was tested with a Thermax MX10G-26FLX Ethernet cable. [1]

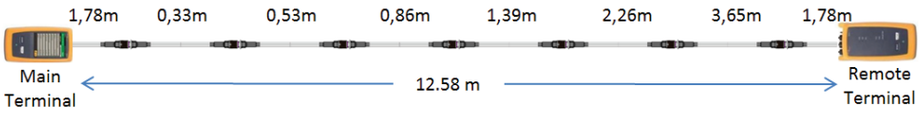

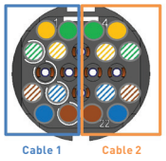

Insert IG Contact Mapping

Transmission Characteristics:

NEAR-END CROSSTALK (NEXT):

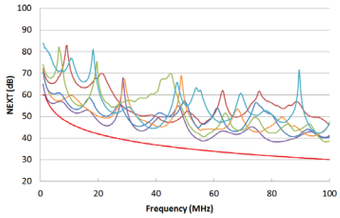

INSERTION LOSS (IL):

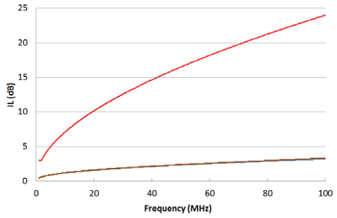

RETURN LOSS (RL):

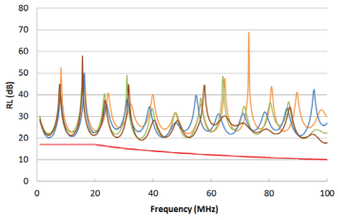

Refer to mounting instruction ref. MI IN 27 00004 EN (QuickFusio) and ref. MI IN 27 00001 EN (QuickFusio+) to ensure proper cable and connector assembly. Test reports are available upon request.

Notes

1. For specific information on the Ethernet offer for QuickFusio™ equipped with PC tail contacts, please ask your local representative.

Contacts

LUXCIS® ARINC 801 FIBER OPTIC CONTACTS

The LuxCis® Arinc 801 product range is a proven and flexible fiber optic interconnect solution that offers high speed communication in the aerospace market and other harsh environments.

OPTICAL PERFORMANCE

	SINGLEMODE UPC	SINGLEMODE APC	MULTIMODE PC
Wave length	1,310-1,550 nm		850-1,300 nm
Insertion loss Mean Standard deviation	- 0.15 dB 0.1 dB	- 0.2 dB 0.12 dB	- 0.10 dB 0.07 dB
Return loss	> 50 dB	> 65 dB	> 20 dB

Insertion Loss against a reference pathcord: IEC 61300-3-4 Method B, also described in ARINC 805
Return Loss: IEC 61300-3-6, also described in ARINC 805

MECHANICAL AND ENVIRONMENTAL CHARACTERISTICS

TEST	STANDARD	LUXCIS® ARINC 801 IN QUICKFUSIO+ CONNECTOR
Thermal Cycling	SAE AS 13441 Method 1003.1	-55 °C/+125 °C (Cable Dependent)
Temperature Endurance	TIA/EIA 455-11	1,000 h @ 125 °C (Cable Dependent)
Vibration	EN2591-403-Method B-Level G	27.8 grms
Shocks	EN2591-402	50 grms
Durability	TIA/EIA 364-09	500 Cycles
Maintenance Ageing	SAE AS 13441 Method 2002.1	10 Cycles
Cable Retention 1.8 mm Diameter 900 µm Diameter	SAE AS 13441 Method 2009.1	68 N 7 N
Humidity	TIA/EIA 455-5	10 Cycles/24 h - 90% RH - + 25 °C/+65 °C
Salt Spray	SAE AS 13441 Method 1001.1	96 h
Altitude Immersion	TIA/EIA 455-15A	Minimum Pressure Equivalent to an Altitude of 16,764 m (55,000 ft.).

LUXCIS® CONTACT PART NUMBERING SYSTEM

F725

LUXCIS® SERIES

FERRULE TYPE
00: PC ferrule for single-mode fiber
03: PC ferrule for 50/125 or 62.5/125 µm multi-mode fiber
04: PC ferrule for 100/40 um multi-mode fiber
05: PC ferrule for 200/230 um multi-mode fiber
50: APC ferrule for single-mode fiber

CABLE TYPE AND DIAMETER
118: 900 µm cable
318: 1.2 mm cable with strengthening members, tight structure
419: 1.6 to 2.2 mm cable, loose structure
519: 1.6 to 2.2 mm cable, tight structure

Notes
Radiall can support you with your cable and harness assemblies.
Please contact your sales representative.

Contacts

Q-MTITAN™ FIBER OPTIC CONTACTS

Q-MTitan™ is a ruggedized High Density optical solution for harsh environments. It brings multifiber capability through a standard #8 Quadrax cavity. With Q-MTitan™ protecting the MT ferrule, customers can take advantage of the parallel optic technology in harsh environments.

OPTICAL PERFORMANCE

	MULTIMODE PC
Wavelength	850-1,300 nm
Insertion Loss	< 0.50 dB
Return Loss	> 20 dB

MECHANICAL AND ENVIRONMENTAL CHARACTERISTICS

The Q-MTitan™ contact has followed a full qualification test file in multipin connectors sharing the same quadrax cavity design with the QuickFusio™. The following data show the main performance of Q-MTitan™. For additional information, please contact your local Radiall representative.

TEST	STANDARD	Q-MTITANTM CONTACTS
Thermal Cycling	EN 2591-6305	-55 °C/+125 °C (Cable Dependent)
Temperature Endurance	EN 2591-6301	1,000 h @ 125 °C (Cable Dependent)
Vibration	TIA/EIA 455-11C	28 g
Mechanical Endurance	EN 2591-406	200 Cycles
Cable Cycling Flexing	EN 2591-609	10 Cycles/3 N
Cable Pulling	EN2591-610	68 N
Damp Heat Cycling	EN 2591-6321	10 Cycles/24 h - 95% RH - + 38 °C/+65 °C

Q-MTitan™ Series F735 Offers:

- High Density of MT ferrule (12 or 24 fibers)
- Compatibility with round and ribbon multi-fiber cables
- Sealing and cable retention functions on round multi-fiber cables
- Convenient inspection and cleaning with efficient tool kits provided
- User friendly solution: insertion and extraction using standard size 8 tool

Q-MTitan™ contacts are available as pre-terminated cable assembly designed and manufactured based on customer specifications, including various fiber management configurations. Please contact your local Radiall representative with your application requirement.

Contacts

ACCESSORIES

ACCESSORIES FOR THREADED OUTPUT SHELLS

The QuickFusio™ series is compatible with a wide range of standard rear accessories.

The threaded output has been designed per MIL-DTL-38999 series III size 11 rear dimensions. QuickFusio plug and receptacle connectors are suitable for use with Mil-DTL-38999 series III type backshells.

When using F4 and Q1 inserts, refer to page 3-23 to 3-26 to check special grommet protrusion.

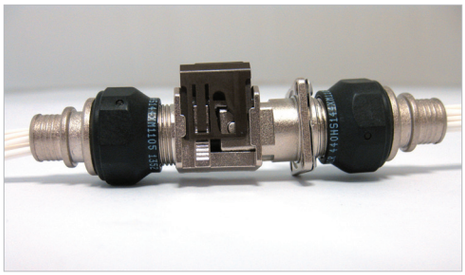

ACCESSORIES FOR BANDING OUTPUT SHELLS

BAND SHIELD TERMINATOR			
Radiall Part Number	Size	Length B	Length C
627990002	Micro	190.5 mm (7.5 in.) - 215.9 mm (8.5 in.)	2.79 mm (0.110 in.) - 2.87 mm (0.113 in.)

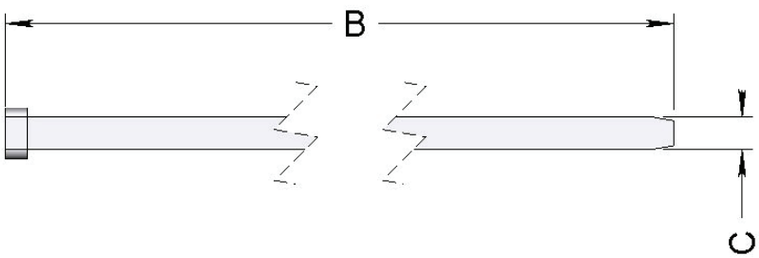

SEALING PLUGS

Sealing plugs are dedicated to environmental inserts.

CONTACT SIZE	RADIALL PART NUMBER	COLOR	STANDARD PART NUMBER
22	616910	Black	MS27488-22-2
20	616911	Red	MS27488-20-2
16	616912	Green	MS27488-16-2
12	616913	Orange	MS27488-12-2
8	618915	Red	N/A

Notes

To be used with banding tool A30199

SPARE PARTS & TOOLS

	PART NUMBER	DESCRIPTION
	627954001	Dust Cap for Plug Shell (Pink)
	627954002	Dust Cap for Receptacle Shell (Pink)
	627954003	ESD Dust Cap for Receptacle Shell (Black)
	627954004	ESD Fly Cap for Receptacle Shell (Black)
	627802001	Sleeve Holder for F4 Insert
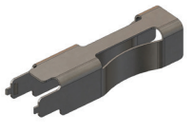	282549048	Extraction Tool for Sleeve Holder
	670950013	Sealing Boot for Size 8 Quadrax Contacts Cable: NF 24 Q100 and ABS1503KD24
	627990001	Screw Kit (4 × UNC 4-40 3A 5/16 Screws and 4 x Washers)
	282690050	Flat Screwdriver for Slide Lock Opening FACOM_AN_2.5 x 50
	627900001	Bundle Mount Platform
	282690051	Holding Wrench for Rear Threaded Accessory

Inserts

WEIGHT - QUICKFUSIO

PLUG [1]				
INSERT NAME	INSERT TYPE	THREADED ACCESSORY	BANDING PLATFORM	BANDING PLATFORM & TIE WRAP
22/IG	Pin	8.50 g (0.30 oz)	8.60 g (0.30 oz)	8.90 g (0.31 oz)
22/IG	Socket	9.20 g (0.33 oz)	9.30 g (0.33 oz)	9.60 g (0.34 oz)
14	Pin	8.50 g (0.30 oz)	8.60 g (0.30oz)	8.90 g (0.31 oz)
14	Socket	9.20 g (0.33 oz)	9.30 g (0.33 oz)	9.60 g (0.34 oz)
07	Pin	8.15 g (0.29 oz)	8.25 g (0.29 oz)	8.55 g (0.30 oz)
07	Socket	8.60 g (0.30 oz)	8.70 g (0.30 oz)	9.00 g (0.32 oz)
04	Pin	8.15 g (0.29 oz)	8.25 g (0.29 oz)	8.55 g (0.30 oz)
04	Socket	8.60 g (0.30 oz)	8.70 g (0.30 oz)	9.00 g (0.32 oz)
M4	Pin	8.15 g (0.29 oz)	8.25 g (0.29 oz)	8.55 g (0.30 oz)
M4	Socket	8.60 g (0.30 oz)	8.70 g (0.30 oz)	9.00 g (0.32 oz)
M9	Pin	8.55 g (0.302 oz)	8.65 g (0.305 oz)	8.95 g (0.316 oz)
M9	Socket	9.25 g (0.326 oz)	9.35 g (0.330 oz)	9.65 g (0.340 oz)
XG	Pin	8.45 g (0.30 oz)	8.55 g (0.30 oz)	8.85 g (0.31 oz)
XG	Socket	9.30 g (0.33 oz)	9.40 g (0.33 oz)	9.70 g (0.34 oz)

SQUARE FLANGE RECEPTACLE [1]					
INSERT NAME	INSERT TYPE	THREADED ACCESSORY	BANDING PLATFORM	BANDING PLATFORM & TIE WRAP	SHORT RECEPTACLE
22/IG	Pin	7.20 g (0.25 oz)	7.30 g (0.26 oz)	7.60 g (0.27 oz)	6.75 g (0.24 oz)
22/IG	Socket	7.85 g (0.28 oz)	7.95 g (0.28 oz)	8.25 g (0.29 oz)	N/A
14	Pin	7.20 g (0.25 oz)	7.30 g (0.26 oz)	7.60 g (0.27 oz)	6.75 g (0.24 oz)
14	Socket	7.85 g (0.28 oz)	7.95 g (0.28 oz)	8.25 g (0.29 oz)	N/A
07	Pin	6.85 g (0.25 oz)	6.95 g (0.25 oz)	7.25 g (0.26 oz)	6.40 g (0.23 oz)
07	Socket	7.30 g (0.26 oz)	7.40 g (0.26 oz)	7.70 g (0.27 oz)	N/A
04	Pin	6.85 g (0.25 oz)	6.95 g (0.25 oz)	7.25 g (0.26 oz)	6.40 g (0.23 oz)
04	Socket	7.30 g (0.26oz)	7.40 g (0.26 oz)	7.70 g (0.27 oz)	N/A
M4	Pin	6.85 g (0.25 oz)	6.95 g (0.25 oz)	7.25 g (0.26 oz)	6.40 g (0.23 oz)
M4	Socket	7.30 g (0.26 oz)	7.40 g (0.26 oz)	7.70 g (0.27 oz)	N/A
M9	Pin	7.25 g (0.256 oz)	7.35 g (0.259 oz)	7.65 g (0.270 oz)	9.40 g (0.332 oz)
M9	Socket	7.90 g (0.279 oz)	8.00 g (0.282 oz)	8.30 g (0.293 oz)	N/A
XG	Pin	7.10 g (0.25 oz)	7.20 g (0.25 oz)	7.50 g (0.27 oz)	6.65 g (0.24 oz)
XG	Socket	7.95 g (0.28 oz)	8.05 g (0.28 oz)	8.35 g (0.30 oz)	N/A

Notes

1. Connector weight includes non-environmental insert only without contacts.

Inserts

IN-LINE RECEPTACLE [1] [2]				
INSERT NAME	INSERT TYPE	THREADED ACCESSORY	BANDING PLATFORM	BANDING PLATFORM & TIE WRAP
22/IG	Pin	5.40 g (0.19 oz)	5.50 g (0.19 oz)	5.80 g (0.20 oz)
22/IG	Socket	6.05 g (0.21 oz)	6.15 g (0.22 oz)	6.45 g (0.23 oz)
14	Pin	5.40 g (0.19 oz)	5.50 g (0.19 oz)	5.80 g (0.20 oz)
14	Socket	6.05 g (0.21 oz)	6.15 g (0.22 oz)	6.45 g (0.23 oz)
7	Pin	5.05 g (0.18 oz)	5.15 g (0.18 oz)	5.45 g (0.19 oz)
7	Socket	5.50 g (0.19 oz)	5.60 g (0.20 oz)	5.90 g (0.21 oz)
4	Pin	5.05 g (0.18 oz)	5.15 g (0.18 oz)	5.45 g (0.19 oz)
4	Socket	5.50 g (0.19 oz)	5.60 g (0.20 oz)	5.90 g (0.21 oz)
M4	Pin	5.05 g (0.18 oz)	5.15 g (0.18 oz)	5.45 g (0.19 oz)
M4	Socket	5.50 g (0.19 oz)	5.60 g (0.20 oz)	5.90 g (0.21 oz)
M9	Pin	5.45 g (0.192 oz)	5.55 g (0.196 oz)	5.85 g (0.206 oz)
M9	Socket	6.10 g (0.215 oz)	6.20 g (0.219 oz)	6.50 g (0.229 oz)
XG	Pin	5.30 g (0.19 oz)	5.40 g (0.19 oz)	5.70 g (0.20 oz)
XG	Socket	6.15 g (0.22 oz)	6.25 g (0.22 oz)	6.55 g (0.23 oz)

JAM NUT RECEPTACLE			
RECEPTACLES EQUIPPED WITH		JAM NUT RECEPTACLE OUTPUT OPTIONS	
INSERT NAME	INSERT TYPE	THREADED ACCESSORY	BANDING PLATFORM
22/IG	Pin	10.60 g (0.374 oz)	10.75 g (0.379 oz)
22/IG	Socket	11.25 g (0.397 oz)	11.40 g (0.402 oz)
14	Pin	10.60 g (0.374 oz)	10.75 g (0.379 oz)
14	Socket	11.25 g (0.397 oz)	11.40 g (0.402 oz)
7	Pin	10.25 g (0.362 oz)	10.40 g (0.367 oz)
7	Socket	10.70 g (0.377 oz)	10.85 g (0.383 oz)
4	Pin	10.25 g (0.362 oz)	10.40 g (0.367 oz)
4	Socket	10.70 g (0.377 oz)	10.85 g (0.383 oz)
M4	Pin	10.25 g (0.362 oz)	10.40 g (0.367 oz)
M4	Socket	10.70 g (0.377 oz)	10.85 g (0.383 oz)
M9	Pin	10.65 g (0.376 oz)	10.80 g (0.381 oz)
M9	Socket	11.30 g (0.399 oz)	11.45 g (0.404 oz)
XG	Pin	10.65 g (0.376 oz)	10.80 g (0.381 oz)
XG	Socket	11.30 g (0.399 oz)	11.45 g (0.404 oz)

Notes

1. Connector weight includes non-environmental insert only without contacts.
2. Connector weight does not include the bundle mount platform. Bundle mount platform weight is 3.35 g (0.12 oz).

Inserts

WEIGHT - QUICKFUSIO+

PLUG [1]				
INSERT NAME	INSERT TYPE	THREADED ACCESSORY	BANDING PLATFORM	BANDING PLATFORM & TIE WRAP
22/IG	Pin	9.45 g (0.33oz)	9.55 g (0.34 oz)	9.85 g (0.35 oz)
22/IG	Socket	10.10 g (0.36 oz)	10.20 g (0.36 oz)	10.50 g (0.377 oz)
14	Pin	9.35 g (0.33 oz)	9.45 g (0.33 oz)	9.75 g (0.34 oz)
14	Socket	10.00 g (0.35 oz)	10.10 g (0.36 oz)	10.40 g (0.37 oz)
07	Pin	9.05 g (0.32 oz)	9.15 g (0.32 oz)	9.45 g (0.33 oz)
07	Socket	9.50 g (0.34 oz)	9.60 g (0.34 oz)	9.90 g (0.35 oz)
04	Pin	9.00 g (0.32 oz)	9.10 g (0.32 oz)	9.40 g (0.33 oz)
04	Socket	9.45 g (0.33 oz)	9.55 g (0.34 oz)	9.85 g (0.35 oz)
F4	Pin	9.50 g (0.34 oz)	9.60 g (0.34 oz)	N/A
Q1	Pin	8.60 g (0.30 oz)	8.70 g (0.31 oz)	N/A
Q1	Socket	9.25 g (0.33 oz)	9.35 g (0.33 oz)	N/A
M4	Pin	9.05 g (0.32 oz)	9.15 g (0.32 oz)	9.45 g (0.33 oz)
M4	Socket	9.50 g (0.34 oz)	9.60 g (0.34 oz)	9.90 g (0.35 oz)
XG	Pin	9.50 g (0.34 oz)	9.60 g (0.34 oz)	9.90 g (0.35 oz)
XG	Socket	10.35 g (0.37 oz)	10.45 g (0.37 oz)	10.75 g (0.38 oz)

SQUARE FLANGE RECEPTACLE [1]					
INSERT NAME	INSERT TYPE	THREADED ACCESSORY	BANDING PLATFORM	BANDING PLATFORM & TIE WRAP	SHORT RECEPTACLE
22/IG	Pin	8.10 g (0.29 oz)	8.20 g (0.29 oz)	8.50 g (0.30 oz)	6.75 g (0.24 oz)
22/IG	Socket	8.80 g (0.31 oz)	8.90 g (0.31 oz)	9.20 g (0.32 oz)	N/A
14	Pin	8.00 g (0.28 oz)	8.10 g (0.29 oz)	8.40 g (0.30 oz)	6.75 g (0.24 oz)
14	Socket	8.65 g (0.31 oz)	8.75 g (0.31 oz)	9.05 g (0.32 oz)	N/A
07	Pin	7.75 g (0.27 oz)	7.85 g (0.28 oz)	8.15 g (0.29 oz)	6.40 g (0.23 oz)
07	Socket	8.20 g (0.29 oz)	8.30 g (0.29 oz)	8.60 g (0.30 oz)	N/A
04	Pin	7.70 g (0.27 oz)	7.80 g (0.28 oz)	8.10 g (0.29 oz)	6.40 g (0.23 oz)
04	Socket	8.10 g (0.29 oz)	8.20 g (0.29 oz)	8.50 g (0.30 oz)	N/A
F4	Socket	9.00 g (0.32 oz)	9.10 g (0.32 oz)	N/A	N/A
Q1	Pin	7.30 g (0.26 oz)	7.40 g (0.26 oz)	N/A	N/A
Q1	Socket	7.95 g (0.28 oz)	8.05 g (0.28 oz)	N/A	N/A
M4	Pin	7.75 g (0.27 oz)	7.85 g (0.28 oz)	8.15 g (0.29 oz)	6.40 g (0.23 oz)
M4	Socket	8.20 g (0.29 oz)	8.30 g (0.29 oz)	8.60 g (0.30 oz)	N/A
XG	Pin	8.20 g (0.29 oz)	8.30 g (0.29 oz)	8.60 g (0.30 oz)	6.65 g (0.24 oz)
XG	Socket	9.05 g (0.32 oz)	9.15 g (0.32 oz)	9.45 g (0.33 oz)	N/A

Notes

1. Connector weight includes environmental insert without contacts, except for short receptacles which are equipped with non-environmental inserts.

Inserts

IN-LINE RECEPTACLE [1] [2]				
INSERT NAME	INSERT TYPE	THREADED ACCESSORY	BANDING PLATFORM	BANDING PLATFORM & TIE WRAP
22/IG	Pin	6.30 g (0.22 oz)	6.40 g (0.23 oz)	6.70 g (0.24 oz)
22/IG	Socket	7.00 g (0.25 oz)	7.10 g (0.25 oz)	7.40 g (0.26 oz)
14	Pin	6.20 g (0.22 oz)	6.30 g (0.22 oz)	6.60 g (0.23 oz)
14	Socket	6.85 g (0.24 oz)	6.95 g (0.25 oz)	7.25 g (0.26 oz)
7	Pin	5.95 g (0.22 oz)	6.05 g (0.21 oz)	6.35 g (0.22 oz)
7	Socket	6.40 g (0.23 oz)	6.50 g (0.23 oz)	6.80 g (0.24 oz)
4	Pin	5.90 g (0.21 oz)	6.00 g (0.21 oz)	6.30 g (0.22 oz)
4	Socket	6.30 g (0.22 oz)	6.40 g (0.23 oz)	6.70 g (0.24 oz)
F4	Socket	7.20 g (0.25 oz)	7.30 g (0.26 oz)	N/A
Q1	Pin	5.50 g (0.19 oz)	5.60 g (0.20 oz)	N/A
Q1	Socket	6.15 g (0.22 oz)	6.25 g (0.22 oz)	N/A
M4	Pin	5.95 g (0.21 oz)	6.05 g (0.21 g)	6.35 g (0.22 oz)
M4	Socket	6.40 g (0.23 oz)	6.50 g (0.23 oz)	6.80 g (0.24 oz)
XG	Pin	6.40 g (0.23 oz)	6.50 g (0.23 oz)	6.80 g (0.24 oz)
XG	Socket	7.25 g (0.26 oz)	7.35 g (0.26 oz)	7.65 g (0.27 oz)

JAM NUT RECEPTACLE			
RECEPTACLES EQUIPPED WITH		JAM NUT RECEPTACLE OUTPUT OPTIONS	
INSERT NAME	INSERT TYPE	THREADED ACCESSORY	BANDING PLATFORM
22/IG	Pin	11.50 g (0.406 oz)	11.65 g (0.411 oz)
22/IG	Socket	12.20 g (0.430 oz)	12.35 g (0.436 oz)
14	Pin	11.40 g (0.402 oz)	11.55 g (0.407 oz)
14	Socket	12.05 g (0.425 oz)	12.20 g (0.430 oz)
7	Pin	11.15 g (0.393 oz)	11.30 g (0.399 oz)
7	Socket	11.60 g (0.409 oz)	11.75 g (0.414 oz)
4	Pin	11.10 g (0.392 oz)	11.25 g (0.397 oz)
4	Socket	11.50 g (0.406 oz)	11.65 g (0.411 oz)
M4	Pin	11.15 g (0.393 oz)	11.30 g (0.399 oz)
M4	Socket	11.60 g (0.409 oz)	11.75 g (0.414 oz)
M9	Pin	11.40 g (0.402 oz)	11.55 g (0.407 oz)
M9	Socket	12.10 g (0.427 oz)	12.25 g (0.432 oz)
XG	Pin	11.60 g (0.409 oz)	11.75 g (0.414 oz)
XG	Socket	12.45 g (0.439 oz)	12.60 g (0.444 oz)
F4	Socket	12.40 g (0.437 oz)	12.55 g (0.443 oz)
Q1	Pin	10.70 g (0.377 oz)	10.85 g (0.383 oz)
Q1	Socket	11.35 g (0.400 oz)	11.50 g (0.406 oz)

Notes

1. Connector weight includes environmental insert without contacts, except for short receptacles which are equipped with non-environmental inserts.
2. Connector weight does not include the bundle mount platform. Bundle mount platform weight is 3.35 g (0.12 oz).

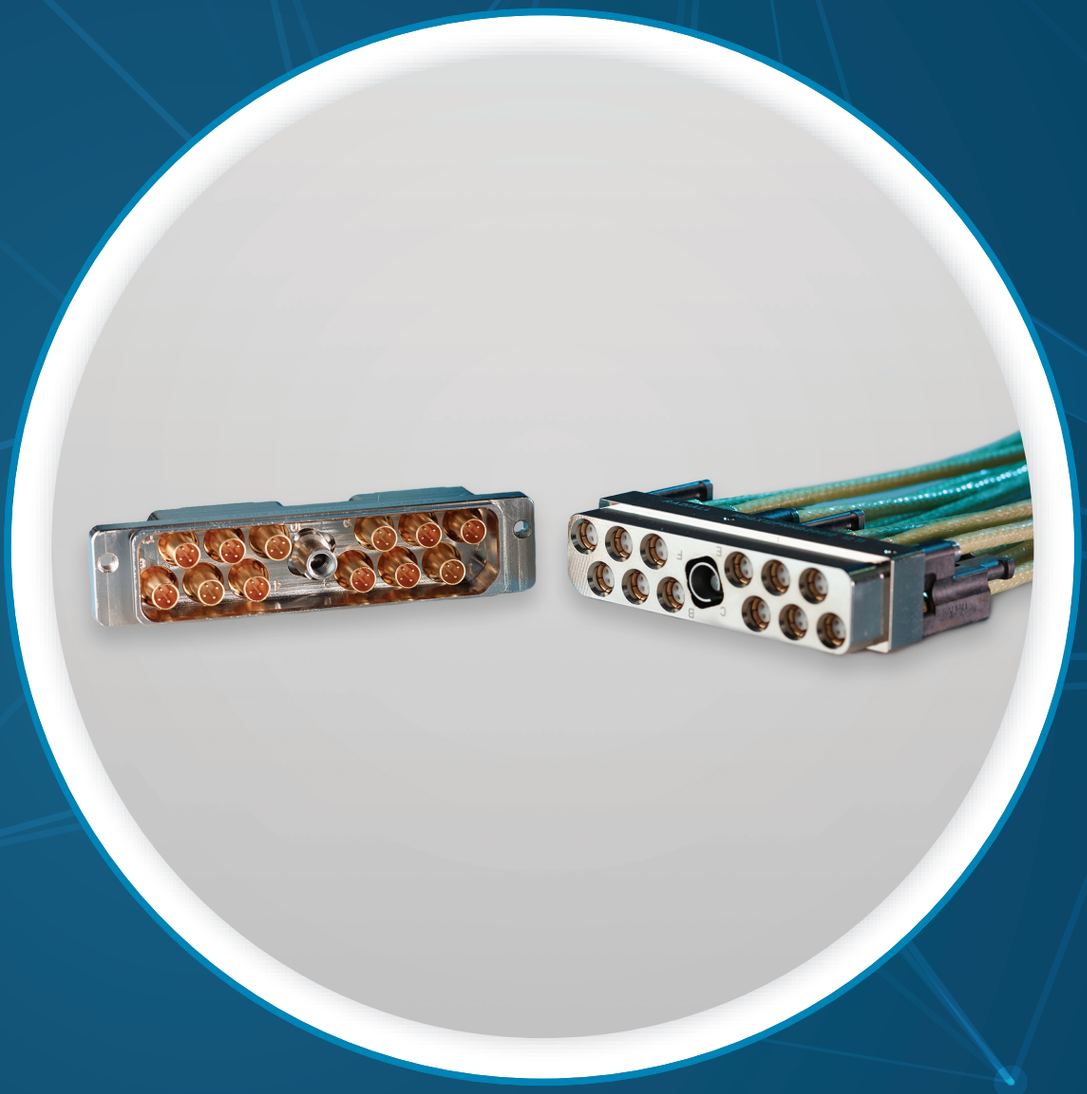

HDQX SERIES

Section 4 Table of Contents

INTRODUCTION

Introduction....4-2
Applications....4-2
Features....4-3
Electrical Characteristics....4-4
Mechanical Characteristics....4-4

CONTACTS

Crimp Contacts....4-5
PC Tail Contacts....4-5

CONNECTORS & ACCESSORIES

Product Overview....4-6
How to Order HDQX Connectors....4-7
Contacts Termination....4-8
Shell Mounting....4-8
Dimensions....4-9
Panel Cut-Out....4-10
Polarization Code....4-11 to 4-12
Accessories & Tools....4-13

INTRODUCTION

Radiall introduces the new HDQX connector series, specially designed for the transmission of Ethernet and RF high speed signals required in harsh environment applications.

HDQX connectors combine both the compact and rugged qualities necessary for high reliability and signal integrity in aerospace and military environments.

The HDQX range offers Cable-to-Cable and Cable-to-PCB solutions. Offering twelve size 8 cavities in a high-density rectangular shell, the space saving HDQX accepts Quadrax and BMA RF contacts, as well as twinax and triaxial contacts.

APPLICATIONS

Typical applications for the HDQX connectors include data networks, in-flight entertainment systems, video control centers and naval and military vehicle communications.

© AIRBUS S.A.S 2007 _ photos by e'm company / H. GOUSSÉ

Introduction

FEATURES

HDQX CONNECTOR BENEFITS

- High-density solution for size 8 cavities using standard ARINC 600 Quadrax contacts and size 8 BMA RF coax, triax and twinax contacts
- Space-saving connector for limited space applications
- Rectangular connector is stackable
- Lightweight composite strain relief
- Simple and secure connection with a central locking device
- Contacts grounded to the shell with extremely high electrical continuity

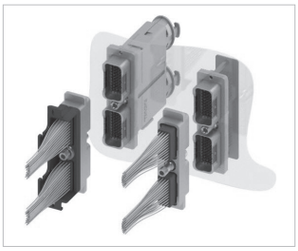

Class P Connector Pair

AVAILABLE HDQX RANGE CONNECTORS

- Class N: Non-environmental plug and receptacle
- Class E: Environmental plug and receptacle (connector sealed on the electrical line)
- Class P: Panel sealed receptacle (feed-through sealed connector)

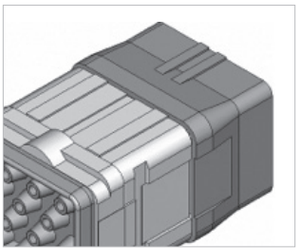

Cable-to-PCB Application

MAIN FEATURES

- 12 contacts cavities
- Grounded size 8 standard cavities (ARINC 600 type)
- Cable-to-cable and cable-to-PCB application
- RoHS compliant
- 12 keying formatting possibilities positions
- 1 central position jacknut/jackscrew
- Uses standard insertion/extraction tool
- User Manual # MIIN1700002 is available

Cable-to-Cable Application

Introduction

ELECTRICAL CHARACTERISTICS

- **Shell-to-Shell Conductivity:** 2.5 mΩ (level reached during initial and after testing as per EN2591-205).
- **Contact-to-Shell Conductivity:** maximum of 10 mΩ (level reached during initial and after environmental testing)
- **Lightning Strike:**
  - Pin injection: 1600V 320A as per RTCA DO160 (§22.5.1)
  - Current pulse: 3kA as per EN2591-214
- **DWV at Sea Level:**
  - 1,000 Vrms between outer body and signal contacts as per EN2591-207, Method C
  - 1,000 Vrms between signal contacts
  - DWV altitude (70,000 ft): 125 Vrms for the quadrax contacts as per ARINC 600

MECHANICAL CHARACTERISTICS

- **Mating/Unmating:** 100 cycles
- **Impact Test:** 8 drops at 1.20 m as per EN2591-613
- **Bending Moment (Applied to Accessories):** 100 N as per EN2591-404
- **Mechanical Axial Strength (Applied to Accessories):** 100 N as per EN2591-420

VIBRATION & SHOCKS

SERIES	MATERIAL	VIBRATION	SHOCK
		For 8 Hours on each of the 3 Axis/ Interruption<1 µs EN2591-403 EIA 364-28	3 Shocks on each Axis EN2591-402 EIA 364-27
HDQX	Aluminium	Acceleration 16.9 g (Method B Figure 2 Table 1 Level E)	Shock Amplitude 50 g/Duration 11 ms

OTHER CHARACTERISTICS

- **Temperature Range:** -65 °C/+150 °C (-85 °F/+302 °F), 5 cycles as per EN2591-305
- **Temperature Life:** 1,000 hours at 150 °C (+302 °F) as per EN2591-301 Method B
- **Salt Spray:** 96 hours as per EN2591-307
- **Sealing:** altitude immersion 50,000 ft as per EN2591-314
- **Sand and Dust:** wind velocity 3.5 ±0.5 ms as per EN2591-308
- **Mould Growth:** during 28 days, growth 0 as per EN2591-306 Method A
- **Fluid Immersion:** kerosene, phosphate base, mineral base, polyolester, solvent, detergent, aircraft deicers, heptafluoropropane, pentafluoroethane, radar coolant as per EN3909
- **Magnetic Permeability:** 2 µ as per EN2591-513

Contacts

CRIMP CONTACTS

QUADRAX CONTACTS

Standardized ARINC 600 Quadrax contacts are available with HDQX series.

CONTACT SIZE	CABLE TYPE	TYPE	ENVIRONMENTAL PART NUMBER	NON-ENVIRONMENTAL PART NUMBER	INS/EXT TOOL IN METAL
8	Ethernet Cable ABS0972 & ABS1503	Pin	Consult Radiall	620175010	282549001
		Socket		620075010	
	Tensolite NF24Q100	Pin		620175050	
		Socket		620075050	
	Tensolite NF26Q100 - JSF Y18	Pin		620175021	
		Socket		620075021	

BMA CONTACTS

CONTACT SIZE	CABLE TYPE	CONNECTOR TYPE	NON-ENVIRONMENTAL PART NUMBER	FREQUENCY RANGE	MAX VSWR	INSERTION LOSS
8	SHF5 - SHF5M [1]	Pin	617171010	DC-18 GHz	1.35	0.13 dB at Max Frequency (18 GHz)
8	RG142	Pin	617171020	DC-12,4 GHz	1.35	0.11 dB at Max Frequency (12.4 GHz)
8	SHF2.4 M [1]/UT.085 Harbour SS405 Times Tflex405	Pin	617171030	DC-18 GHz	1.35	0.13 dB at Max Frequency (18 GHz)
8	SHF5 - SHF5M [1]	Socket	617071010	DC-18 GHz	1.35	0.13 dB at Max Frequency (18 GHz)
8	RG142	Socket	617071020	DC-12,4 GHz	1.35	0.11 dB at Max Frequency (12.4 GHz)
8	SHF3 [1]	Socket	617071040	DC-18 GHz	1.35	0.13 dB at Max Frequency (18 GHz)

Extraction tool 282549001 is used for size 8 BMA contacts.

PC TAIL CONTACTS

SIZE 8 QUADRAX PIN CONTACTS

PART NUMBER	CONTACT TERMINATION	MINIMUM LENGTH IN MM (INCH) [2]
620176009	YA	2.80 (0.110)
620176016	ZA	
620176509	RA	
620176008	Y	5.65 (0.222)
620176010	Z	
620176508	R	
620176011	YB	8.50 (0.334)
620176012	ZB	
620176511	RB	
620176013	YC	11.90 (0.469)
620176014	ZC	
620176513	RC	

Notes

1. BMA which have to accommodate SHF cable requires a wiring done by Radiall, please, contact Radiall for information.
2. Minimum length corresponds to straight PC tail length protruding from HDQX cavity.

PRODUCT OVERVIEW

Detailed view of the various parts of HDQX connector:

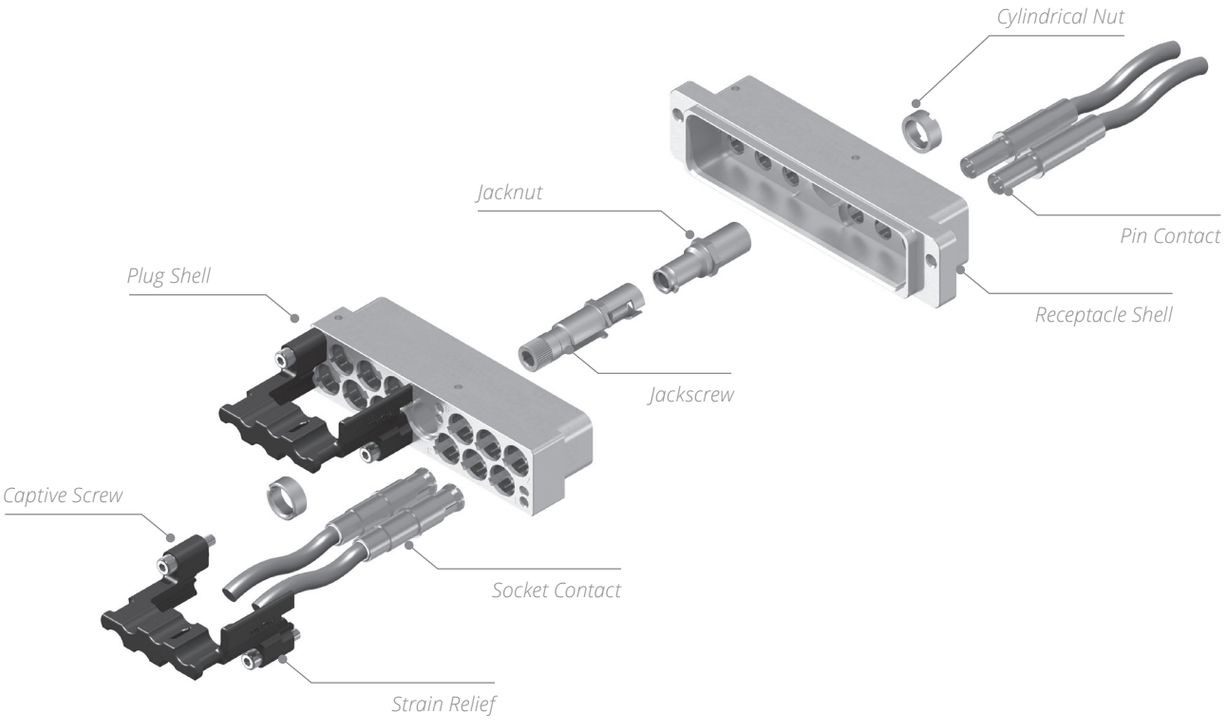

HOW TO ORDER HDQX CONNECTORS

HDQX

SERIES PREFIX

CONNECTOR SIZE
12: 12 size 8 cavities

SHELL STYLE
P: Plug for RR/RR (rear release/rear removal) contacts
R: Receptacle for RR/RR (rear release/rear removal) contacts
F: Receptacle fot FR/FR (front release/front removal) contacts

CLASS
E: Environmental (upon request only)
N: Non-environmental
P: Panel sealing, receptacle only (upon request only)

SHELL PLATING
N: Nickel

CONTACT TERMINATION
X: No contacts
Qx: Crimp Quadrax contacts [2]
Cx: Crimp BMA contacts [1] [2]
Yx: Gold PC tail Quadrax contacts [3]
Zx: Tin lead PC tail Quadrax contacts [3]
Rx: Pure tin PC tail Quadrax contacts [3]

SHELL MOUNTING
00: Flangeless plug
00: 2 self-locking threads for 6-32 UNC 2A screws for receptacle
01: 4 self-locking threads for 6-32 UNC 2A screws for receptacle

POLARIZATION
WITHOUT: No polarization system provided
POLARIZATION: See page 4-11 for codes

Notes
1. BMA contacts are not available with class E and P.
2. See Table 1 on page 4-8
3. See Table 2 on 4-8

CONTACTS TERMINATION

TABLE 1:
CRIMPED CONTACT TERMINATION
FOR RR/RR RECEPTACLE AND PLUG

CABLE	QUADRAX	BMA
ABS1503KD24	Q1	-
NF24Q100	Q2	-
JSFY18	Q3	-
RG142	-	C1
UT 0.085	-	C2

TABLE 2:
PC-TAIL CONTACT TERMINATION
FOR FR/FR RECEPTACLE

MINIMUM LENGTH MM (INCH)	GOLD	TIN-LEAD	PURE TIN
2.80 (0.110)	YA	ZA	RA
5.65 (0.222)	Y	Z	R
8.50 (0.334)	YB	ZB	RB
11.90 (0.469)	YC	ZC	RC

SHELL MOUNTING

Both shell mounting 00 and 01 are available with RR/RR and FR/FR receptacle.

CODE	DETAIL	
00	Flangeless Plug (No Fixing System)	
00	Rear Panel Mounting Receptacle: 2 Self-Locking Threads for 6-32 UNC 2A Screws	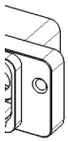
01	Rear Panel Mounting Receptacle: 4 Self-Locking Threads for 6-32 UNC 2A Screws	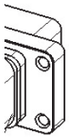

Connectors & Accessories

DIMENSIONS

RECEPTACLE

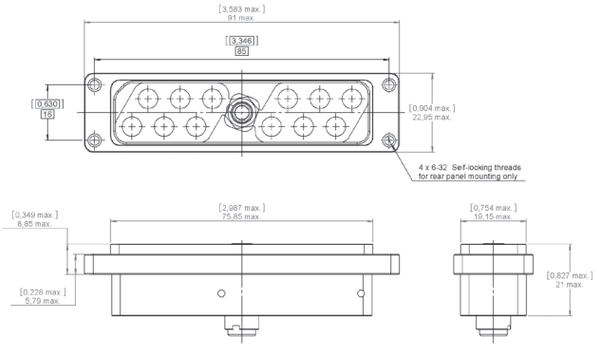

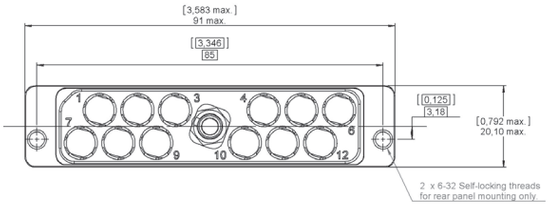

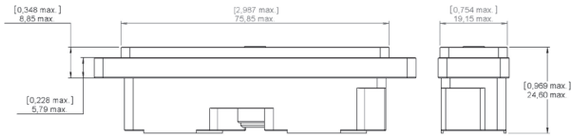

PLUG

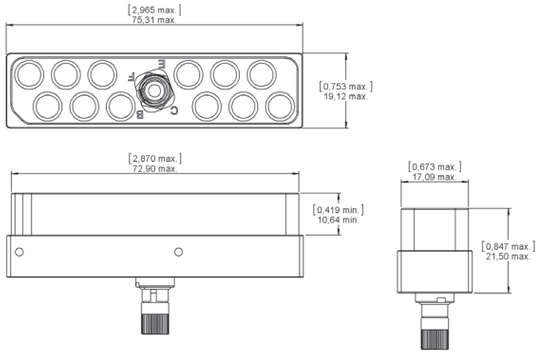

Not Applicable

Connectors & Accessories

PANEL CUT-OUT

RECEPTACLE

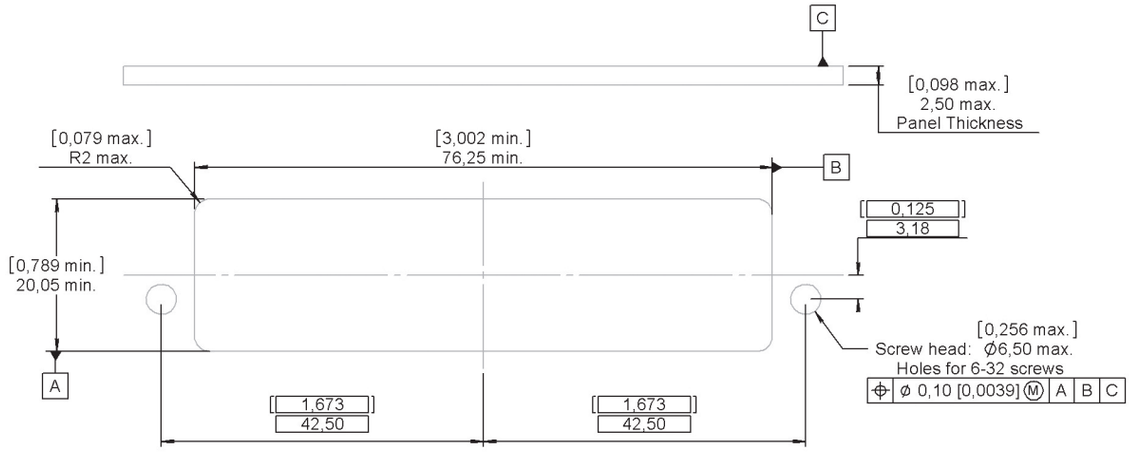

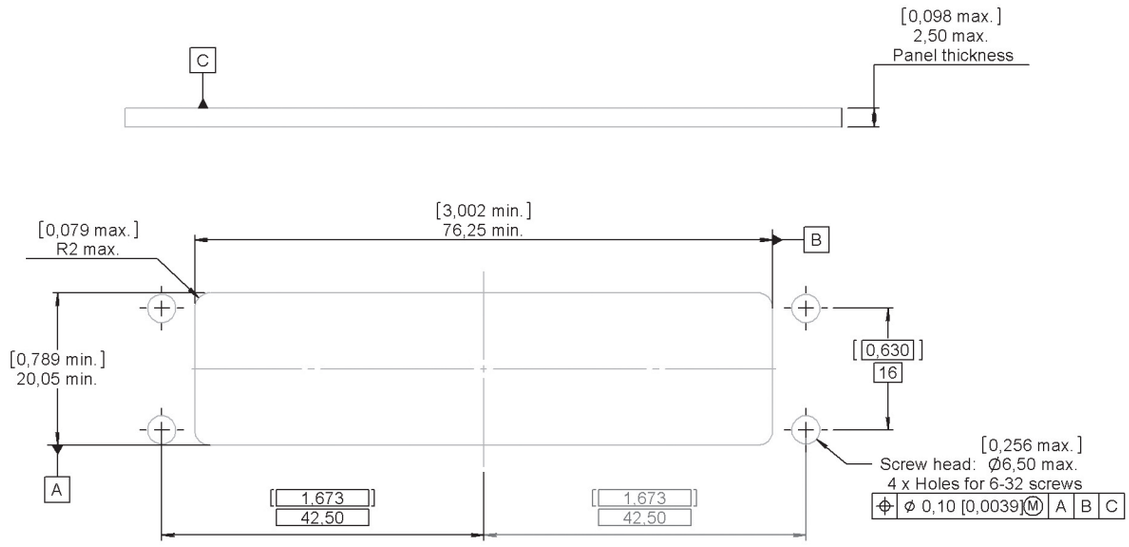

POLARIZATION CODE

CODE	DEVICE	DEVICE DELIVERED
12	Jackscrew, A to F	Unassembled
13	Jackscrew, N to Z	Unassembled
22	Jacknut, A to F	Unassembled
23	Jacknut, N to Z	Unassembled
1A	Jackscrew, position A to Z	Assembled
2A	Jacknut, position A to Z	Assembled

HDQX JACKSCREW & JACKNUT

In the standard version, the jackscrew is mounted on the plug shell and the jack nut is mounted on the receptacle shell.

There are two sets of jackscrews and jacknuts. Each set provides 6 polarizing positions A, B, C, D, E, and F and the second set provides polarizing positions N, R, W, X, Y and Z. The difference between the two sets is accomplished using an indexing point shown below in the drawings:

DESIGNATION	POLARIZING POSITIONS	CODING DEVICE	PART NUMBER	
Jackscrew	A to F		617612801	
	N to Z		617612803	
	Universal		617612806	
Jacknut for Front Release Receptacle	A to F		617612805	
	N to Z		617612804	
Jacknut for Rear Release Receptacle	A to F		617612800	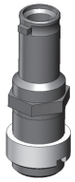
	N to Z		617612802	
Jacknut	Universal		617612807	

Connectors & Accessories

PLUG SHELL

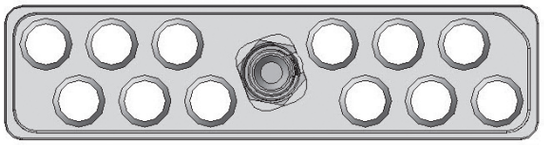

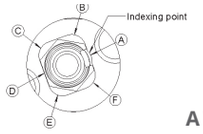

A TO F

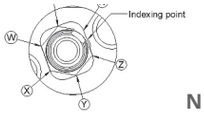

N TO Z

MATING FACE SHOWN

A	B	C	D	E	F
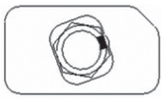	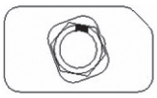	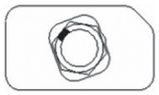		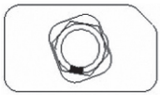	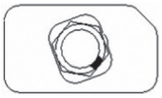

N	R	W	X	Y	Z
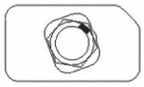	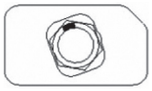	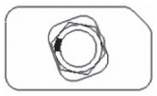	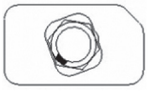	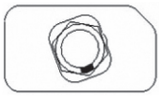	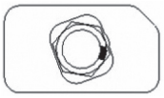

RECEPTACLE SHELL

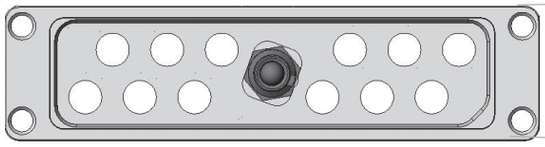

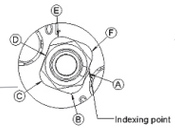

A TO F

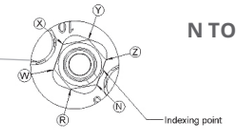

N TO Z

MATING FACE SHOWN

A	B	C	D	E	F
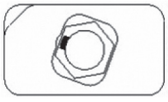	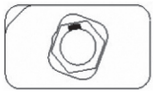	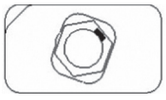	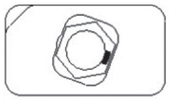	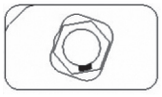	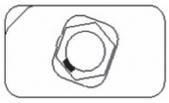

N	R	W	X	Y	Z
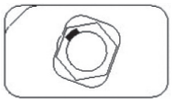	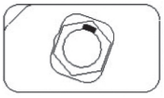	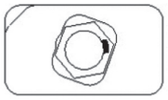	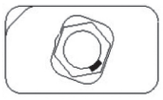	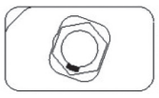	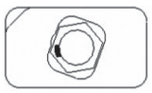

Connectors & Accessories

ACCESSORIES & TOOLS

	PART NUMBER	DESCRIPTION
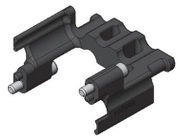	617922024	Strain Relief for Plug Assembly Torque 0.55 ±0.05 Nm
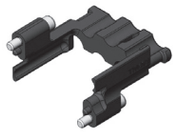	617922026	Strain Relief for Receptacle Assembly Torque 0.55 ±0.05 Nm
	282666001	Connector Locking: Allen Wrench (9/64 inch)
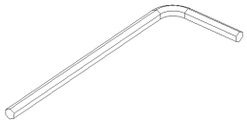	282666002	Strain Relief Locking: Allen Wrench (5/64 in.)
	282549001	Extraction Tool (For Quadrax and BMA Contacts)
	282664	1/4 inch Hex. Screwdriver Bit to Affix the Nut of the Jackscrew or the Jacknut
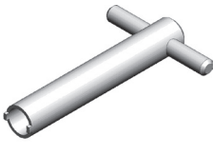	282665	Spigot Wrench to Affix the Nut of the Jackscrew or the Jacknut

Notes

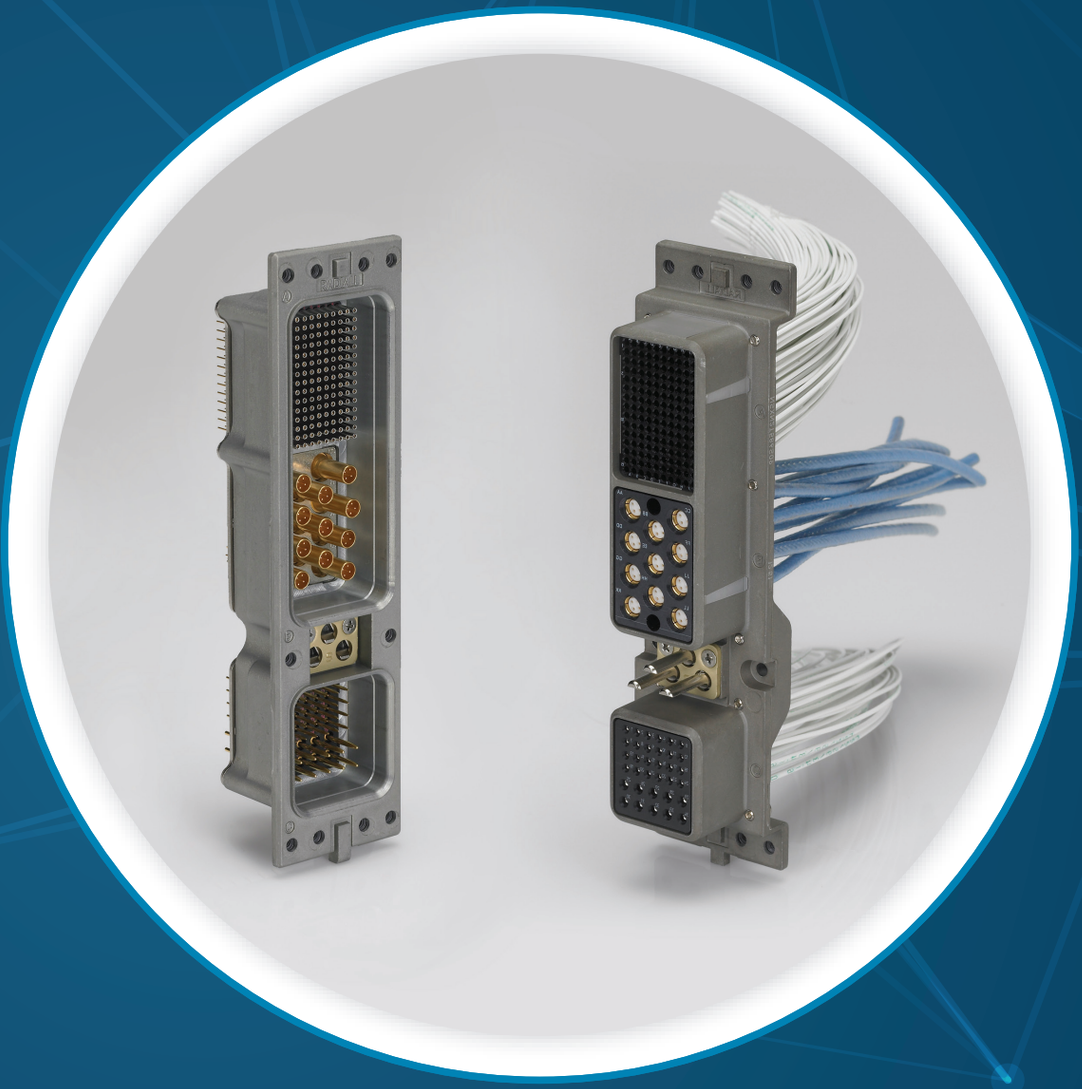

NSX - BPX SERIES

Arinc 600

Section 5 Table of Contents

NSX-ARINC

Introduction....5-3 to 5-4
Application....5-5
Characteristics....5-5 to 5-7
Technical Characteristics....5-5
Electrial Characteristics....5-6
Mechanical & Environmental Characteristics....5-6 to 5-7
Masses....5-7

EMI/RFI PERFORMANCES

Material....5-8
Electrical Characteristics....5-8
Product Overview....5-9

HOW TO ORDER

How to Order....5-10
NSX Shell Contact Arrangement....5-11 to 5-20
Insert Combination Code....5-21 to 5-27
Modification Code....5-28 to 5-29
Polarization Code....5-30
Polarization Code Table....5-31 to 5-33

CONTACTS

Signal, Power & Ground Contacts Crimps Termination....5-34 to 5-36
Chromel Contacts – Crimp Termination....5-37
Alumel Contacts – Crimp Termination....5-38
Coaxial Contacts....5-39 to 5-50
Concentric Twinax Contacts....5-50 to 5-51
Quadrax Contacts....5-52
LuxCis® Contacts....5-53 to 5-55
NSX E/N/H/C – Rear Removable Contacts....5-56
How To Order NSX F/G/K....5-57
NSX F/G/K – Front Removable PC Tail....5-58 to 5-61
Dimensions....5-62 to 5-76
Panel Cut-Out....5-77 to 5-78
Tools....5-79 to 5-80
Accessories....5-81 to 5-88

NSX-SINGLE SHELL

Introduction....5-89
Materials....5-89
How to Order NSX Single Shell Connector....5-90
Installation....5-91 to 5-92
Dimensions....5-93 to 5-94
NSX Single Shell Panel Cut-Out....5-95
EMI/RFI NSX Single Shell Plug Dimension....5-96

Section 5 Table of Contents

BPX

Introduction....5-97
Characteristics
Electrial Characteristics....5-97
Mechanical & Environmental Characteristics....5-98
Materials....5-98
How to Order Connector....5-99
Insert Combination Code in the Shell....5-100
Contact....5-100
Accessories....5-100 to 5-103
Dimensions....5-104 to 5-109
Panel Cut-Out....5-110 to 5-111

NSX-Arinc

INTRODUCTION

NSX & BPX MULTICONTACT CONNECTORS

NSX series (defined by ARINC 600 specification) and BPX series (defined by Boeing S280W551 specification) are multipin rack and panel connectors used to connect high performance aeronautical equipment.

Items in this catalog are covered by French and foreign Patents and/or Patents pending.

These two series manufactured by Radiall show the following characteristics:

- High contact density
- Wide range of contact types and arrangement
- Numerous shell polarization possibilities which give maximum security when mating the equipment in the rack
- Low mating forces
- Separation of power and signal contacts
- EMI/RFI shielding option provided by shell to shell conductivity

Major aircraft manufacturers and equipment manufacturers have been entrusting Radiall for many years using NSX and BPX series.

NSX SERIES (ARINC 600 STANDARD)

Radiall NSX series offers the following versions including a new cost effective solution:

Connectors for **rear removable** contacts:

- NSX N
  - Plug and receptacle connectors.
  - Non-environmental version, inserts without grommet and compound, plugs without groove and O-ring.
- NSX C
  - Plug and receptacle connectors.
  - Non-environmental version, inserts with grommet but without compound, plugs without groove and O-ring.
- NSX E
  - Plug and receptacle connectors.
  - Environmental version, inserts with grommet and compound, plugs with groove and O-ring.
- NSX H
  - Plug connector only.
  - Environmental version, inserts with grommet and compound, plugs without groove and O-ring.

Connectors for **front removable** contacts:

- NSX F
  - Receptacle connectors only.
  - Only signal contacts are Front release/Front Removable (FR/FR), others will be Rear Release/Rear Removable (RR/RR). Non-environmental version, inserts without grommet and compound.
- NSX G
  - Receptacle connectors only.
  - Signal, power, coax, triax and quadrax contacts are FR/FR. Non-environmental version, inserts without grommet and compound.
- NSX K
  - New cost effective solution. 100% RoHS compliant for shell plating selection F and S. Receptacle connectors only.
  - Inserts fully completed with harpooned size 22 contacts. Non-environmental version.

As an option, EMI/RFI features are available to get shell to shell conductivity.

NSX-Arinc

SHELL

Radiall NSX series offers three metallic shell sizes fitted with polarization hardware offering 216 polarizing possibilities.

NSX shells answer all requirements with three different platings, all compliant with ARINC 600 standard: nickel, RoHS.

The plug shell is fitted with inserts for signal (size 22) pin contacts, coax, triax and quadrax socket contacts. The receptacle shell is fitted with inserts for signal socket contacts, coax, triax and quadrax pin contacts.

INSERTS

Environmental inserts have a wire sealing grommet on the rear face and compound between insert and shell. The different kinds of inserts available are:

- Insert for rear release rear removable contacts (blue colored on the terminating face).
- Insert for front release front removable contacts (red colored on the mating face).
- Insert for front release rear removable contacts (yellow colored on the mating face).

CONTACTS

A whole range of crimp or PC tail contacts are available with NSX connectors: signal, coax, triax, quadrax or fiber optic contacts. Signal and power contacts were designed to be low insertion force contacts so that they are perfectly orientated into the cavities and contacts are not damaged when insertion is made. Front release and rear release inserts use contact retention system (clips) which meets the ARINC 600 contact retention requirements. This system allows contacts to be removed from the insert using an extraction tool.

NEW COST EFFECTIVE SOLUTION

Radiall is constantly looking for cost saving solutions to answer our customers' expectations. Based on this concept, Radiall proudly introduces:

Inserts with Harpooned Contacts

Discover the new class K available for front removable contacts. They show the following features and benefits:

- Improved pricing stability and reduced dependence on fluctuating gold prices
- Lightweight solution as insert is one piece
- 100% intermateable with any ARINC 600 plug
- 100% backwards compatibility with existing PCB and PGA connectors
- RoHS compliant
- Fully qualified under Arinc 600 specification requirements

Selective Plating Contacts

A brand new range of PC tail contacts with gold selective plating is now available. They offer the following features and benefits:

- Significant reduction of cost of ownership
- N - more dependence t- gold rate fluctuation
- N - change in the contact integration process

Specifications

- Same contact design as full plated version
- Contact interface gold plated with 1.27 µm
- No impact on PCB design
- Product qualification is available upon request

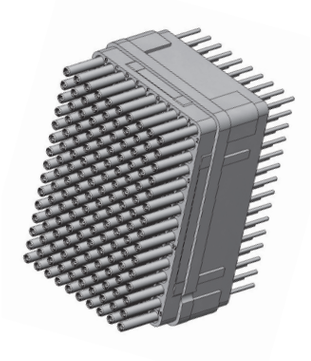

NSX-Arinc

APPLICATION

These connectors are mostly used to connect high performance aeronautical equipment.

Most of the NSX connectors are used in the main avionics bay on commercial airplanes. Electronic functions are found in an LRU (Line Replaceable Unit).

Refer to Arinc 600 document for more information.

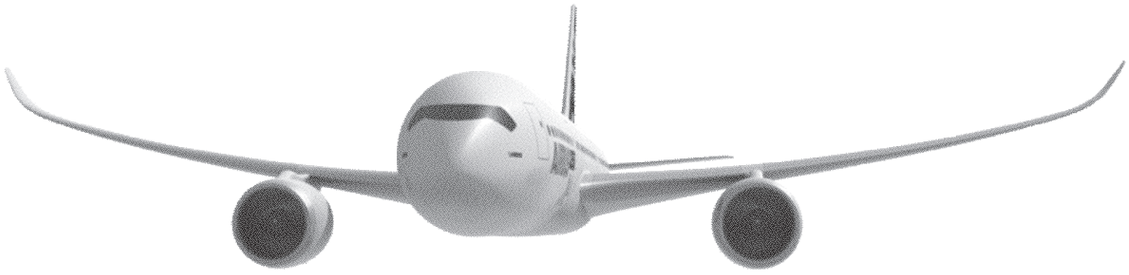

CHARACTERISTICS

TECHNICAL CHARACTERISTICS

DESCRIPTION	MATERIAL	PLATING
Shell	Aluminum Alloy	Chromatation or Nickel
Inserts	Thermosetting or Thermoplastic	-
Metallic Inserts	Aluminum Alloy	Nickel
O-Ring and Grommet	Fluorosilicone	-
Contacts	Copper Alloy	Gold over Nickel
Retention Clip	Copper Alloy	-
Insert Retention Plate	Aluminum Alloy	Blue Anodized or Nickel
Polarization Posts and Keys Retention Plate	Aluminum Alloy	Chromatation or Nickel
Screws Vashers and Clinch-Nuts	Stainless Steel	-
	Steel	Cadmium Yellow Chromate
Polarization Posts and Keys	Zinc Alloy	Nickel

NSX-Arinc

ELECTRICAL CHARACTERISTICS

CONTACT SIZE	WIRE				MAX CURRENT (A)
	AWG	CROSS SECTION (MM^2)	OUTSIDE DIA. MM (INCHES)		
			MIN.	MAX.	
22	22 24 26	0.38 0.21 0.14	0.66 (0.026)	1.4 (0.055)	5 3 2
20	20 22 24	0.60 0.38 0.21	1 (0.040)	1.8 (0.071)	7.5 5 3
16	16 18 20	1.34 0.93 0.60	1.7 (0.066)	2.6 (0.102)	13 10 7.5
12	12 14 16	3.18 1.91 1.34	2.4 (0.094)	3.4 (0.134)	23 17 13
8	8 10	9 5	4.65 (0.183)	6.48 (0.255)	46 33

MECHANICAL & ENVIRONMENTAL CHARACTERISTICS

- **Temperature Range:** - 65 °C/+125 °C
- **Temperature Life:** 1,000 hours at 125 °C.
- **Salt Spray:** MIL-STD-1344 method 1001.1 test condition B (48 hours).
- **Moisture Resistance:** MIL-STD-1344 method 1002.1 test condition II (10 times 24 hours).
- **Sealing:** environment resistant to running water (environmental version only).
- **Fluid Resistance:** resistance to MIL-STD-1344 method 1016 (fluids a, e, i).
- **Durability:** 500 mating and unmating cycles.
- **Random Vibration:**
  - Conforming to MIL-STD-1344 method 2005.1 test condition 5 letter E. (16.4 g from 50 to 2,000 Hz, 8 hours per direction)
- **Shock:** 50g 11 ms half sine, MIL-STD-1344 method 2004.1 three impacts per direction
- **Mating Force:**
  - Connector size 1: 27 pounds (120 N) max
  - Connector size 2: 60 pounds (267 N) max
  - Connector size 3: 105 pounds (467 N) max

CONTACT RETENTION FORCE

CONTACT SIZE	22	20	16	12	8	COAX TRIAX QUADRAX
Rentention Force min (oz)	12	20	25	30	25	25

NSX-Arinc

COAX CONTACTS ELECTRICAL CHARACTERISTICS

- **Nominal Impedance:** 50Ω
- **DWV:** 1,500 VAC – IR at 25°C = 5,000 MΩ
- **V.S.W.R.:** Size 5 → 1.3 from DC to 1,500 MHz and insertion loss = 0.3 dB, Size 1 → 1.3 from DC to 5,000 MHz

MASS G (OZ)

SHELLS

Includes screws, washers, insert retention plate and polarization hardware.

PLUG			RECEPTACLE		
Size 1	Size 2	Size 3	Size 1	Size 2	Size 3
110 (3.88)	130 (4.59)	220 (7.76)	130 (4.59)	140 (4.94)	245 (8.64)

INSERTS

CONTACT ARRANGEMENT DESIGNATION	FOR PLUG SHELL		FOR RECEPTACLE SHELL	
	ENVIRONMENTAL TYPE	NON-ENVIRONMENTAL TYPE	ENVIRONMENTAL TYPE	NON-ENVIRONMENTAL TYPE
5C2	15.25 (0.54)	12.39 (0.44)	9.92 (0.35)	7.25 (0.26)
40	13.52 (0.48)	11.15 (0.39)	9.22 (0.33)	8.22 (0.29)
60	18.78 (0.66)	15.53 (0.55)	12.78 (0.45)	11.43 (0.40)
30T2	17.86 (0.63)	14.75 (0.52)	11.38 (0.40)	9.36 (0.33)
150	41.80 (1.47)	20.87 (0.74)	28.01 (0.99)	24.32 (0.86)
121	45.93 (1.62)	37.79 (1.33)	29.77 (1.05)	24.53 (0.87)
120T2	41.21 (1.45)	34.12 (1.20)	26.89 (0.95)	23.83 (0.84)
71C1/1C71	31.4 (1.11)	27.7 (0.98)	19.73 (0.70)	18.68 (0.66)
60	58.87 (2.08)	48.97 (1.73)	35.69 (1.26)	25.79 (0.91)
10T10	51.80 (1.83)	45.45 (1.60)	32.76 (1.16)	26.41 (0.93)
C4	-	31.56 (1.11)	-	20.96 (0.74)
C2	-	25.94 (0.91)	-	12.48 (0.44)
100	30.63 (1.08)	25.31 (0.89)	20.56 (0.73)	17.8 (0.63)
85	33.01 (1.16)	27.15 (0.96)	21.67 (0.76)	18.67 (0.66)
34	41.56 (1.47)	34.57 (1.22)	25.06 (0.88)	18.06 (0.64)
13C2	39.96 (1.41)	33.36 (1.18)	24.48 (0.86)	17.89 (0.63)
6T6	41.48 (1.46)	36.52 (1.29)	25.53 (0.90)	31.24 (1.10)
Q11	36.86 (1.30)	31.26 (1.10)	25.07 (0.88)	19.47 (0.69)
62Q2	31.85 (1.12)	26.24 (0.93)	-	13.2 (0.47)
68Q2	31.14 (1.10)	25.64 (0.90)	19.12 (0.67)	16.32 (0.58)
11Q2	37.39 (1.32)	30.88 (1.09)	24.38 (0.86)	17.87 (0.63)

CONTACTS

CONTACT SIZE	PIN	SOCKET
22	0.12 (4 10^{-3})	0.15 (5.3 10^{-3})
20	0.22 (7.8 10^{-3})	0.40 (14.1 10^{-3})
16	0.72 (25.4 10^{-3})	0.75 (26.5 10^{-3})
12	1.50 (53.0 10^{-3})	1.50 (53.0 10^{-3})
8	619270: 5 (0.18) 619271: 6.5 (0.23)	-

EMI/RFI Performances

EMI/RFI acts directly on electronics systems whether by conduction through the input or input cables or by induction (coupling).

Electronics equipment are particularly vulnerable to interferences and can be disturbed or damaged by them. The serious consequences which may result, make it essential to protect such installations.

The first stage in protection is to install the equipment in a metal surrounding (FARADAY cage) which protects it from some of the interferences; particularly those occurring by induction.

As to meet these requirements RADIALL offers plug connectors for racks which are fitted with ground spring fingers.

Sizes 1, 2 and 3 plugs connectors fitted with ground spring fingers are available. These connectors can be mated with ARINC 600 receptacle connectors. Their technical characteristics are the same than those shown on page 5-5 except the following.

MATERIAL

DESCRIPTION	MATERIAL	PLATING
Shell	Aluminum Alloy	Electroless Nickel
Ground Spring Fingers	Copper Alloy	Electroless Nickel

ELECTRICAL CHARACTERISTICS

- **Shell-to-Shell Conductivity:**
  - (measured according to method 3007 of MIL-STD-1344A), max warranty: 2.5 mΩ
- **Size 8 Cavity Grounding:**
  - (measured according to method 3007 of MIL-STD-1344A), max warranty: 10.0 mΩ
- **EMI Shielding Effectiveness:**
  - (measured according to S280W552) The minimum values warranty are as follows: Typical values

FREQUENCY (MHz)	LEAKAGE ATTENUATION (dB)
100	65
200	63
300	63
400	62
800	60
1,000	60

EMI/RFI Performances

PRODUCT OVERVIEW

Detailed view of the various parts of the NSX connector series.

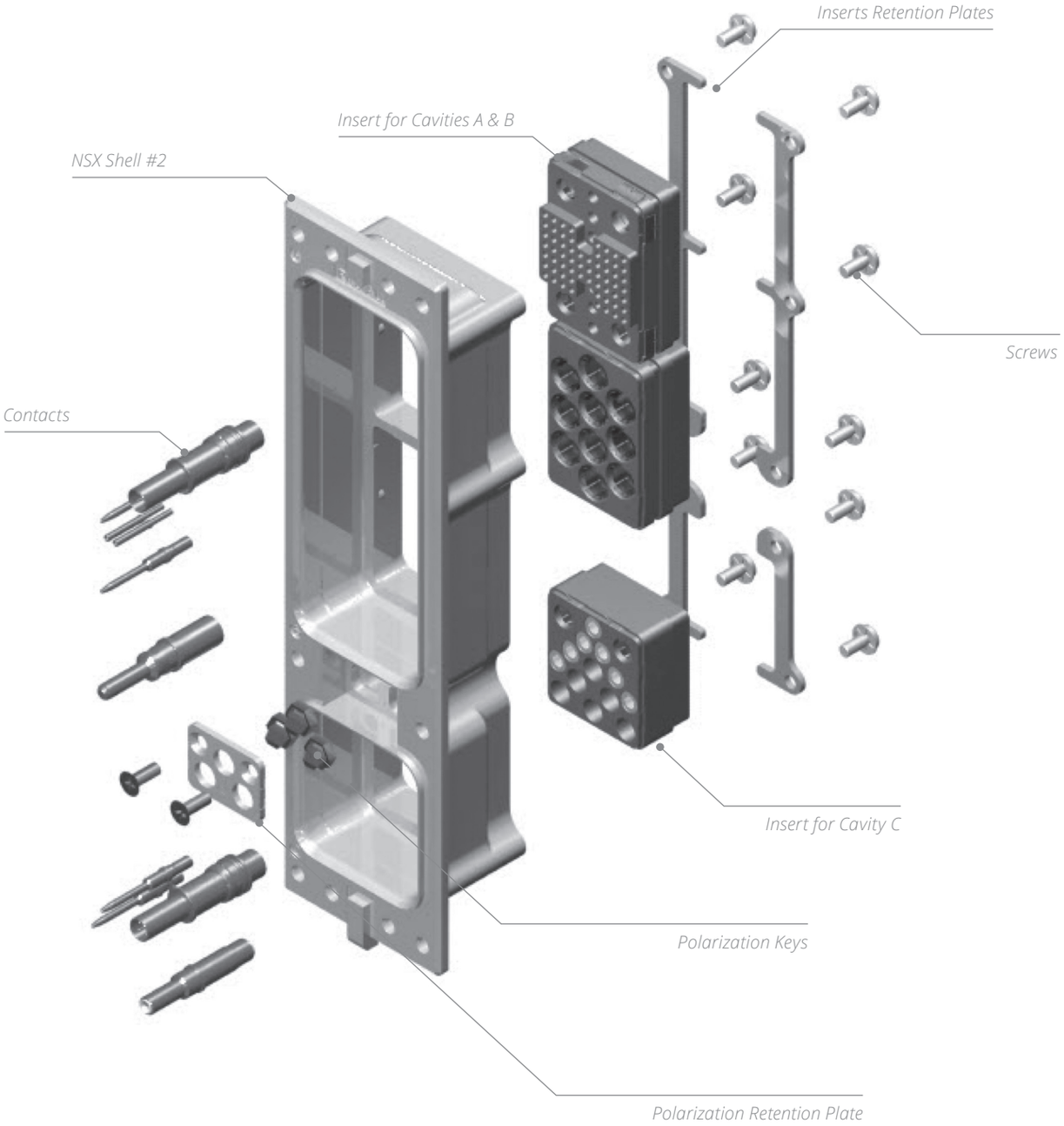

How to Order

NSX E/N/H/C – CONNECTORS FOR REAR REMOVABLE CONTACTS

NSX

SERIES PREFIX

CLASS
N: Non-environmental
E: Environmental, with grommets and compound, plug with O-ring
H: Environmental, plug without O-ring (plug only)
C: Non-environmental, with grommets

SHELL SIZE
1: Size 1
2: Size 2
3: Size 3

SHELL STYLE
S: RoHS plated receptacle
T: RoHS plated plug
F: Nickel-plated receptacle
B: Nickel-plated plug
M: Nickel-plated plug EMI version (see pages 5-70)

INSERT COMBINATION CODE
See combination code (pages 5-21 to 5-27) and contacts arrangements (pages 5-11 to 5-20)
T-cas application combination code: 310 (see page 5-24)

CONTACT TERMINATION [1]
X: Without contacts
S: Crimp contacts

MODIFICATION CODE
See pages 5-28 to 5-29

POLARIZATION CODE [2]
See pages 5-30 to 5-32

DELIVERY CODE FOR T-CAS APPLICATION
See page 5-41

Notes

REMARK: dust caps conductive on receptacle and non conductive on plug are included in the delivery.

1. *If you need to use reduced crimp barrel contacts, use code X and order signal and power contacts separately. Coax, twinax or power size 5 or 8, coax size 1 must always be ordered separately.*
2. *Without polarization code, the connector is delivered with polarization hardware unassembled. Polarization code 00, the connector is delivered without polarizing hardware. Polarization code from 01 to 216, the connector is delivered with the polarization hardware assembled as defined by code.*

How to Order

NSX SHELL CONTACT ARRANGEMENT

All insert names including letter Q can be equipped with quadrax contacts for each insert arrangement the quantity and type of contacts is shown with insert view. RR/RR means contacts are rear release and rear removable. FR/FR means contacts are front release and front removable. The letter G means that the contact will be used in grounded cavity. LuxCis® contacts are always rear release and rear removable. N/A means not available, please contact Radiall for further details.

INSERT NAME	SHELL SIZE CAVITY	EQUIPMENT SIDE RECEPTACLE SHELL				AVIONIC SIDE PLUG SHELL	
		VERSION N	VERSION E	VERSION F	VERSION G	VERSION N	VERSION E
60	1-A/B	60 × #22 RR/RR	60 × #22 RR/RR	60 × #22 FR/FR	N/A	60 × #22 RR/RR	60x#22 RR/RR
30T2	1-A/B	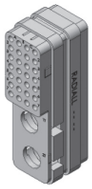 28 × #22 RR/RR 2 × #8G RR/RR	28 × #22 RR/RR 2 × #8G RR/RR	28 × #22 FR/FR 2 × #8G RR/RR	28 × #22 FR/FR 2 × #8G FR/FR	28 × #22 RR/RR 2 × #8G RR/RR	28x#22 RR/RR 2x#8G RR/RR
4C	1-A/B	4 × #5G RR/RR	N/A	N/A	4 × #5G FR/FR	4 × #5G RR/RR	N/A
40	1-C	40 × #22 RR/RR	40 × #22 RR/RR	40 × #22 FR/FR	N/A	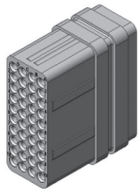 40 × #22 RR/RR	40 × #22 RR/RR
12F12	1-C	h12 × #16 RR/RR LuxCis®	12 × #16 RR/RR LuxCis®	N/A	N/A	12 × #16 RR/RR LuxCis®	12 × #16 RR/RR LuxCis®

How to Order

INSERT NAME	SHELL SIZE CAVITY	EQUIPMENT SIDE RECEPTACLE SHELL				AVIONIC SIDE PLUG SHELL	
		VERSION N	VERSION E	VERSION F	VERSION G	VERSION N	VERSION E
4	1-C	4 × #12 RR/RR [1]	Available [1]	N/A	N/A	4 × #12 RR/RR	4 × #12 RR/RR
5C2	1-C	2 × #5 RR/RR 1 × #12 RR/RR 2 × #16 RR/RR	2 × #5 RR/RR 1 × #12 RR/RR 2 × #16 RR/RR	N/A	2 × #5 FR/FR 1 ×#12 FR/FR 2 × #16 FR/FR	2 × #5 RR/RR 1 × #12 RR/RR 2 × #16 RR/RR	2 × #5 RR/RR 1 × #12 RR/RR 2 × #16 RR/RR
150	2/3-A/B	150 × #22 RR/RR	150 × #22 RR/RR	150 × #22 FR/FR	N/A	150 × #22 RR/RR	150 × #22 RR/RR
121	2/3-A/B	110 × #22 RR/RR 6 × #20 RR/RR 5 × #16 RR/RR	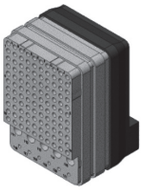 110 × #22 RR/RR 6 × #20 RR/RR 5 × #16 RR/RR	110 × #22 FR/FR 6 × #20 RR/RR 5 × #16 RR/RR	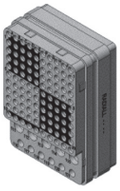 110 × #22 FR/FR 6 × #20 FR/FR 5 × #16 FR/FR	110 × #22 RR/RR 6 × #20 RR/RR 5 × #16 RR/RR	110 × #22 RR/RR 6 × #20 RR/RR 5 × #16 RR/RR
120T2	2/3-A/B	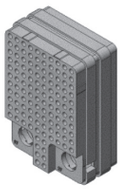 118 × #22 RR/RR 2 × #8G RR/RR	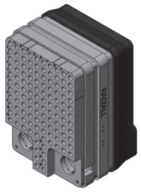 118 × #22 RR/RR 2 × #8G RR/RR	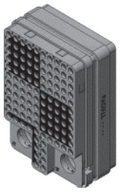 118 × #22 FR/FR 2 × #8G RR/RR	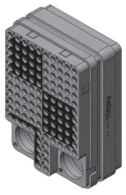 118 × #22 FR/FR 2 × #8G FR/FR	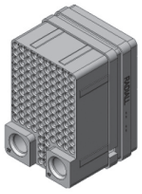 118 × #22 RR/RR 2 × #8G RR/RR	118 × #22 RR/RR 2 × #8G RR/RR

Notes

1. For BPX series, 4 insert will be supplied with FR/RR contacts.

How to Order

INSERT NAME	SHELL SIZE CAVITY	EQUIPMENT SIDE RECEPTACLE SHELL				AVIONIC SIDE PLUG SHELL	
		VERSION N	VERSION E	VERSION F	VERSION G	VERSION N	VERSION E
110	2/3-A/B	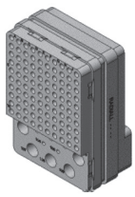 100 × #22 RR/RR 5 × #20 RR/RR 5 × #12 RR/RR	N/A	N/A	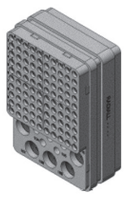 100 × #22 FR/FR 5 × #20 FR/FR 5 × #12 FR/FR	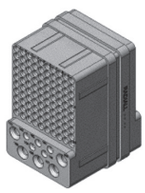 100 × #22 RR/RR 5 × #20 RR/RR 5 × #12 RR/RR	 100 × #22 RR/RR 5 × #20 RR/RR 5 × #12 RR/RR
60A	2/3-A/B	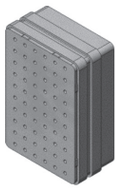 60 × #20 RR/RR	 60 × #20 RR/RR	N/A	 60 × #20 FR/FR	 60 × #20 RR/RR	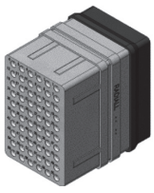 60 × #20 RR/RR
35	2/3-A/B	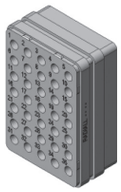 35 × #16 RR/RR	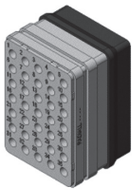 35 × #16 RR/RR	N/A	 35 × #16 FR/FR	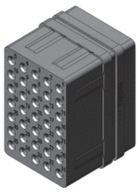 35 × #16 RR/RR	 35 × #16 RR/RR
24	2/3-A/B	 24 × #12 RR/RR	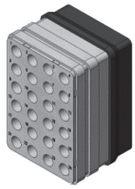 24 × #12 RR/RR	N/A	 24 × #12 FR/FR	 24 × #12 RR/RR	 24 × #12 RR/RR
10T10	2/3-A/B	 10 × #8G RR/RR [1]	Available [1]	N/A	 10 × #8G FR/FR	 10 × #8G RR/RR	 10 × #8G RR/RR

Notes

1. For BPX series, 10T10 insert will be supplied with FR/RR contacts.

How to Order

INSERT NAME	SHELL SIZE CAVITY	EQUIPMENT SIDE RECEPTACLE SHELL				AVIONIC SIDE PLUG SHELL	
		VERSION N	VERSION E	VERSION F	VERSION G	VERSION N	VERSION E
C4	2/3-A/B	4 × #1G FR/RR	N/A	N/A	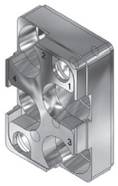 4 × #1G FR/FR	4 × #1G FR/RR	N/A
C2	2/3-A/B	2 × #1G FR/RR	N/A	N/A	N/A	2 × #1G FR/RR	N/A
71C1	2/3-A/B	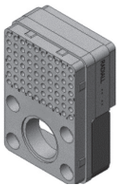 70 × #22 RR/RR 1 × #1 FR/RR	70 ×#22 RR/RR 1 × #1 FR/RR	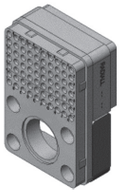 70 × #22 RR/RR 1 × #1 FR/RR	N/A	70 × #22 RR/RR 1 × #1 FR/RR	70 × #22 RR/RR 1 × #1 FR/RR
1C71	2/3-A/B	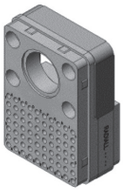 70 × #22 RR/RR 1 × #1 FR/RR	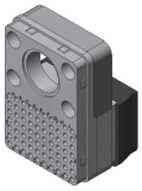 70 × #22 RR/RR 1 × #1 FR/RR	70 × #22 FR/FR 1 × #1 FR/RR	N/A	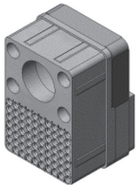 70 × #22 RR/RR 1 × #1 FR/RR	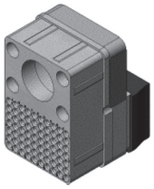 70 × #22 RR/RR 1 × #1 FR/RR

How to Order

INSERT NAME	SHELL SIZE CAVITY	EQUIPMENT SIDE RECEPTACLE SHELL				AVIONIC SIDE PLUG SHELL	
		VERSION N	VERSION E	VERSION F	VERSION G	VERSION N	VERSION E
36F36	2/3-A/B	 36 × #16 RR/RR LuxCis®	 36 × #16 RR/RR LuxCis®	N/A	N/A	 36 × #16 RR/RR LuxCis®	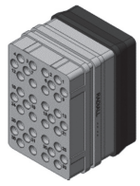 36 × #16 RR/RR LuxCis®
20F12Q8	2/3-A/B	 12 × #16 RR/RR LuxCis® 8 × #8G RR/RR	 12 × #16 RR/RR LuxCis® 8 × #8G RR/RR	N/A	 12 × #16 RR/RR LuxCis® 8 × #8G FR/FR	 12 × #16 RR/RR LuxCis® 8 × #8G RR/RR	 12 × #16 RR/RR LuxCis® 8 × #8G RR/RR
110R	2/3-A/B	 100 × #22 RR/RR 5#20 RR/RR 5#12 RR/RR	 100 × #22 RR/RR 5#20 RR/RR 5#12 RR/RR	N/A	 100 × #22 FR/FR 5#20 FR/FR 5#12 FR/FR	 100 × #22 RR/RR 5#20 RR/RR 5#12 RR/RR	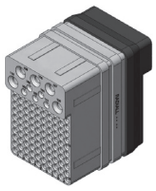 100 × #22 RR/RR 5#20 RR/RR 5#12 RR/RR
Q11	2/3-A/B	 11 × #8G RR/RR	 11 × #8G RR/RR	N/A	 11 × #8G FR/FR	 11 × #8G RR/RR	 11 × #8G RR/RR

How to Order

INSERT NAME	SHELL SIZE CAVITY	EQUIPMENT SIDE RECEPTACLE SHELL				AVIONIC SIDE PLUG SHELL	
		VERSION N	VERSION E	VERSION F	VERSION G	VERSION N	VERSION E
68Q4	2/3-A/B	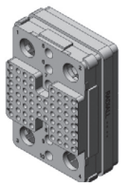 62 × #22 RR/RR 6 × #16 RR/RR 4 × #8G RR/RR	 62 × #22 RR/RR 6 × #16 RR/RR 4 × #8G RR/RR	N/A	N/A	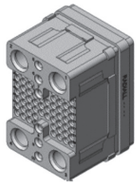 62 × #22 RR/RR 6 × #16 RR/RR 4 × #8G RR/RR	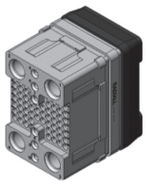 62 × #22 RR/RR 6 × #16 RR/RR 4 × #8G RR/RR
118Q2	2/3-A/B	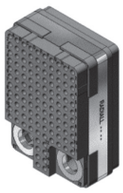 118 × #22 RR/RR 2 × #8G RR/RR	 118 × #22 RR/RR 2 × #8G RR/RR	 118 × #22 FR/FR 2 × #8G RR/RR	 118 × #22 FR/FR 2 × #8G FR/FR	 118 × #22 RR/RR 2 × #8G RR/RR	 118 × #22 RR/RR 2 × #8G RR/RR
100	2/3-C	 100 × #22 RR/RR	 100 × #22 RR/RR	 100 × #22 FR/FR	N/A	 100 × #22 RR/RR	 100 × #22 RR/RR
85	2/3-C	 80 × #22 RR/RR 4 × #20 RR/RR 1 × #16 RR/RR	 80 × #22 RR/RR 4 × #20 RR/RR 1 × #16 RR/RR	 80 × #22 FR/FR 4 × #20 RR/RR 1 × #16 RR/RR	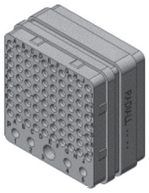 80 × #22 FR/FR 4 × #20 FR/FR 1 × #16 FR/FR	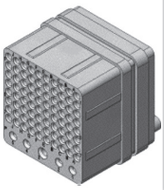 80 × #22 RR/RR 4 × #20 RR/RR 1 × #16 RR/RR	 80 × #22 RR/RR 4 × #20 RR/RR 1 × #16 RR/RR
84	2/3-C	N/A	N/A	N/A	N/A	 80 × #22 RR/RR 4 × #20 RR/RR	 80 × #22 RR/RR 4 × #20 RR/RR

How to Order

INSERT NAME	SHELL SIZE CAVITY	EQUIPMENT SIDE RECEPTACLE SHELL				AVIONIC SIDE PLUG SHELL	
		VERSION N	VERSION E	VERSION F	VERSION G	VERSION N	VERSION E
59	2/3-C	50 × #22 RR/RR 5 × #16 RR/RR 4 × #12 RR/RR	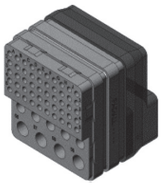 50 × #22 RR/RR 5 × #16 RR/RR 4 × #12 RR/RR	50 × #22 FR/FR 5 × #16 RR/RR 4 × #12 RR/RR	50 × #22 FR/FR 5 × #16 FR/FR 4 × #12 FR/FR	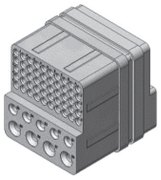 50 × #22 RR/RR 5 × #16 RR/RR 4 × #12 RR/RR	50 × #22 RR/RR 5 × #16 RR/RR 4 × #12 RR/RR
34	2/3-C	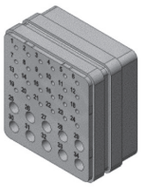 24 × #20 RR/RR 10 × #16 RR/RR	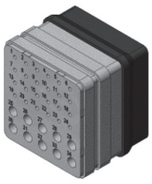 24 × #20 RR/RR 10 × #16 RR/RR	N/A	24 × #20 FR/FR 10 × #16 FR/FR	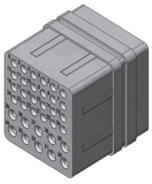 24 × #20 RR/RR 10 × #16 RR/RR	24 × #20 RR/RR 10 × #16 RR/RR
6T6	2/3-C	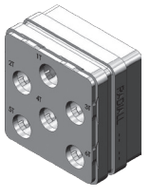 6 × #8G RR/RR [1]	Available [1]	N/A	6 × #8G FR/FR	6 × #8G RR/RR	6 × #8G RR/RR
24T4	2/3-C	20 × #20 RR/RR 4 × #8G RR/RR	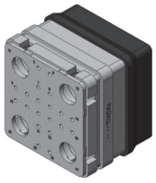 20 × #20 RR/RR 4 × #8G RR/RR	N/A	N/A	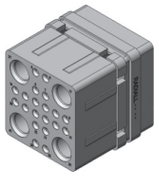 20 × #20 RR/RR 4 × #8G RR/RR	20 × #20 RR/RR 4 × #8G RR/RR

Notes

1. For BPX serie, 6T6 insert will be supplied with FR/RR contacts.

How to Order

INSERT NAME	SHELL SIZE CAVITY	EQUIPMENT SIDE RECEPTACLE SHELL				AVIONIC SIDE PLUG SHELL	
		VERSION N	VERSION E	VERSION F	VERSION G	VERSION N	VERSION E
Q6	2/3-C	 6 × #8G RR/RR	 6 × #8G RR/RR	N/A	 6 × #8G FR/FR	 6 × #8G RR/RR	 6 × #8G RR/RR
20Q4	2/3-C	 20 × #20 RR/RR 4 × #8G RR/RR	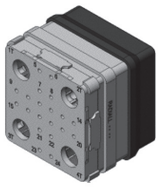 20 × #20 RR/RR 4 × #8G RR/RR	N/A	 20 × #20 FR/FR 4 × #8G FR/FR	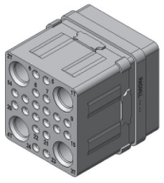 20 × #20 RR/RR 4 × #8G RR/RR	 20 × #20 RR/RR 4 × #8G RR/RR
68Q2	2/3-C	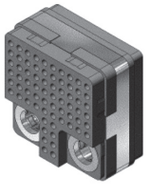 68 × #22 RR/RR 2 × #8G RR/RR	 68 × #22 RR/RR 2 × #8G RR/RR	N/A	 68 × #22 FR/FR 2 × #8G FR/FR	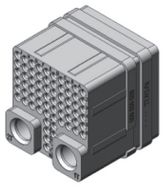 68 × #22 RR/RR 2 × #8G RR/RR	 68 × #22 RR/RR 2 × #8G RR/RR
62Q2	2/3-C	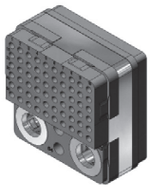 60 × #22 RR/RR 2 × #16 RR/RR 2 × #8G RR/RR	 60 × #22 RR/RR 2 × #16 RR/RR 2 × #8G RR/RR	N/A	 60 × #22 FR/FR 2 × #16 FR/FR 2 × #8G FR/FR	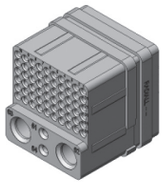 60 × #22 RR/RR 2 × #16 RR/RR 2 × #8G RR/RR	 60 × #22 RR/RR 2 × #16 RR/RR 2 × #8G RR/RR
17F12Q2	2/3-C	 12 × #16 RR/RR LuxCis® 3 × #16 RR/RR 2 × #8G RR/RR	 12 × #16 RR/RR LuxCis® 3 × #16 RR/RR 2 × #8G RR/RR	N/A	 12 × #16 RR/RR LuxCis® 3 × #16 FR/FR 2 × #8G FR/FR	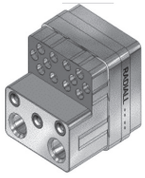 12 × #16 RR/RR LuxCis® 3 × #16 RR/RR 2 × #8G RR/RR	 12 × #16 RR/RR LuxCis® 3 × #16 RR/RR 2 × #8G RR/RR

How to Order

INSERT NAME	SHELL SIZE CAVITY	EQUIPMENT SIDE RECEPTACLE SHELL				AVIONIC SIDE PLUG SHELL	
		VERSION N	VERSION E	VERSION F	VERSION G	VERSION N	VERSION E
11Q2	2/3-C	 4 × #20 RR/RR 3 × #16 RR/RR 4 × #12 RR/RR 2 × #8G RR/RR	 4 × #20 RR/RR 3 × #16 RR/RR 4 × #12 RR/RR 2 × #8G RR/RR	N/A	 4 × #20 FR/FR 3 × #16 FR/FR 4 × #12 FR/FR 2 × #8G FR/FR	 4 × #20 RR/RR 3 × #16 RR/RR 4 × #12 RR/RR 2 × #8G RR/RR	 4 × #20 RR/RR 3 × #16 RR/RR 4 × #12 RR/RR 2 × #8G RR/RR
11WQ2	2/3-C	 4 × #20 RR/RR 3 × #16 RR/RR 4 × #12 RR/RR 2 × #8G RR/RR	 4 × #20 RR/RR 3 × #16 RR/RR 4 × #12 RR/RR 2 × #8G RR/RR	N/A	 4 × #20 FR/FR 3 × #16 FR/FR 4 × #12 FR/FR 2 × #8G FR/FR	 4 × #20 RR/RR 3 × #16 RR/RR 4 × #12 RR/RR 2 × #8G RR/RR	 4 × #20 RR/RR 3 × #16 RR/RR 4 × #12 RR/RR 2 × #8G RR/RR
13C2	2/3-C	 4 × #20 RR/RR 3 × #16 RR/RR 4 × #12 RR/RR 2 × #5 RR/RR	 4 × #20 RR/RR 3 × #16 RR/RR 4 × #12 RR/RR 2 × #5 RR/RR	N/A	 4 × #20 FR/FR 3 × #16 FR/FR 4 × #12 FR/FR 2 × #5 FR/FR	 4 × #20 RR/RR 3 × #16 RR/RR 4 × #12 RR/RR 2 × #5 RR/RR	 4 × #20 RR/RR 3 × #16 RR/RR 4 × #12 RR/RR 2 × #5 RR/RR
12F5C2	2/3-C	 1 × #16 RR/RR 5 × #16 RR/RR LuxCis® 4 × #12 RR/RR 2 × #5 RR/RR	 1 × #16 RR/RR 5 × #16 RR/RR LuxCis® 4 × #12 RR/RR 2 × #5 RR/RR	N/A	N/A	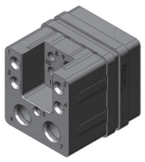 1 × #16 RR/RR 5 × #16 RR/RR LuxCis® 4 × #12 RR/RR 2 × #5 RR/RR	 1 × #16 RR/RR 5 × #16 RR/RR LuxCis® 4 × #12 RR/RR 2 × #5 RR/RR
6P6	2/3-C	 6 × #8 RR/RR [1]	Available [1]	N/A	N/A	 6 × #8 RR/RR	 6 × #8 RR/RR

Notes:

1. For BPX series, 6P6 insert will be supplied with FR/RR contacts.

How to Order

INSERT NAME	SHELL SIZE CAVITY	EQUIPMENT SIDE RECEPTACLE SHELL				AVIONIC SIDE PLUG SHELL	
		VERSION N	VERSION E	VERSION F	VERSION G	VERSION N	VERSION E
15T6Q2	2/3-C	 7 × #16 RR/RR 6 × #10 RR/RR 2 × #8G RR/RR	N/A	N/A	 7 × #16 FR/FR 6 × #10 FR/FR 2 × #8G FR/FR	 7 × #16 RR/RR 6 × #10 RR/RR 2 × #8G RR/RR	N/A
46Q2	2/3-C	 40 × #22 RR/RR 2 × #16 RR/RR 4 × #12 RR/RR 2 × #8G RR/RR	N/A	N/A	 40 × #22 FR/FR 2 × #16 FR/FR 4 × #12 FR/FR 2 × #8G FR/FR	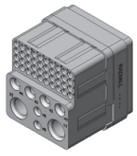 40 × #22 RR/RR 2 × #16 RR/RR 4 × #12 RR/RR 2 × #8G RR/RR	N/A
62F12	2/3-C	N/A	N/A	 50 × #22 FR/FR 12 × #16 RR/RR LuxCis®	N/A	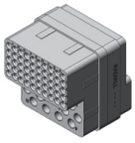 50 × #22 RR/RR 12 × #16 RR/RR LuxCis®	 50 × #22 RR/RR 12 × #16 RR/RR LuxCis®
WAVE GUIDE	2 - A&B	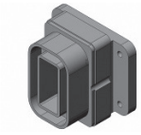 Wave Guide Equipment Side				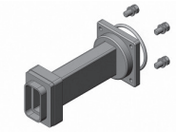 Wave Guide Avionic Side	

How to Order

INSERT COMBINATION CODE

FOR SHELL SIZE 1

CODE	INSERT COMBINATION ON SHELL		
	CAVITY A	CAVITY B	CAVITY C
101	60	60	5C2
102	60	60	BLANK
103	BLANK	60	5C2
104	60	BLANK	5C2
105	BLANK	BLANK	5C2
106	60	BLANK	BLANK
107	30T2	30T2	40
108	60	60	40
109	BLANK	60	BLANK

CODE	INSERT COMBINATION ON SHELL		
	CAVITY A	CAVITY B	CAVITY C
111	BLANK	30T2	40
112	60	4C	5C2
113	60	4C	40
114	60	BLANK	40
115	BLANK	BLANK	BLANK
116	4C	60	40
117	BLANK	BLANK	40
118	60	30T2	5C2
119	30T2	BLANK	5C2

CODE	INSERT COMBINATION ON SHELL		
	CAVITY A	CAVITY B	CAVITY C
120	60	30T2	40
121	4C	4C	40
122	30T2	60	5C2
123	60	60	12F12
124	4C	BLANK	12F12
125	BLANK	BLANK	12F12

FOR SHELL SIZE 2

CODE	INSERT COMBINATION ON SHELL		
	CAVITY A	CAVITY B	CAVITY C
201	150	150	13C2
202	71C1	150	13C2
203	71C1	71C1	13C2
204	Wave Guide	150	13C2
205	150	71C1	13C2
206	150	150	100
207	71C1	150	100
208	150	71C1	100
209	71C1	71C1	100
210	Wave Guide	71C1	100
211	150	150	BLANK
212	71C1	71C1	BLANK
213	71C1	Wave Guide	13C2
214	Wave Guide	71C1	13C2
215	150	73C3	13C2
216	C2	1C71	85
217	150	C5	13C2
218	150	Wave Guide	13C2
219	150	2C	13C2
220	71C1	C2	85
221	1C71	71C1	13C2
222	BLANK	150	13C2
223	BLANK	BLANK	13C2
224	150	BLANK	13C2
225	150	71C1	BLANK
226	150	150	85
227	150	150	34
228	C4	150	13C2
229	120T2	120T2	100

CODE	INSERT COMBINATION ON SHELL		
	CAVITY A	CAVITY B	CAVITY C
230	121	121	6T6
233	120T2	150	100
234	60A	60A	13C2
235	150	C4	34
236	C4	C4	34
237	150	120T2	100
243	150	BLANK	100
244	150	BLANK	BLANK
245	71C1	71C1	85
246	71C1	BLANK	BLANK
247	BLANK	150	85
248	BLANK	150	100
249	BLANK	150	BLANK
250	BLANK	71C1	BLANK
251	BLANK	BLANK	100
252	BLANK	Wave Guide	100
253	C2	150	13C2
254	C2	1C71	100
255	C2	1C71	13C2
256	C2	71C1	13C2
257	C2	C2	13C2
258	-	-	-
259	C4	C4	85
260	Wave Guide	150	85
261	Wave Guide	150	100
262	150	60A	34
264	BLANK	24	100
265	24	150	13C2
266	121	121	85

CODE	INSERT COMBINATION ON SHELL		
	CAVITY A	CAVITY B	CAVITY C
268	60A	121	59
270	150	150	59
271	C4	120T2	13C2
272	150	150	24T4
273	150	C2	13C2
274	C2	71C1	85
275	121	60A	34
276	121	BLANK	100
277	1C71	150	13C2
278	71C1	1C71	13C2
279	150	121	13C2
280	120T2	121	34
281	150	121	34
282	C4	BLANK	13C2
283	150	60A	13C2
284	120T2	120T2	13C2
285	24	60A	100
286	60A	60A	34
287	BLANK	60A	100

How to Order

FOR SHELL SIZE 2

CODE	INSERT COMBINATION ON SHELL		
	CAVITY A	CAVITY B	CAVITY C
288	BLANK	121	BLANK
289	BLANK	BLANK	85
290	150	121	100
291	121	150	100
292	121	121	BLANK
294	121	121	13C2
295	Q11	Q11	85
297	120T2	60A	BLANK
298	121	60A	BLANK
299	BLANK	BLANK	59
501	24	60A	59
502	121	Q11	Q6
503	150	BLANK	11Q2
504	150	BLANK	34
505	Q11	BLANK	34
506	150	150	11Q2
507	150	150	68Q2
508	24	24	100
509	150	Q11	13C2
510	121	121	100
511	24	150	100
512	Q11	Q11	62Q2
513	Q11	Q11	34
514	BLANK	60A	34
515	BLANK	BLANK	BLANK
516	121	121	34
517	BLANK	120T2	13C2
518	Q11	BLANK	62Q2
519	Q11	Q11	68Q2
520	150	121	24T4
521	Q11	150	62Q2
522	20F12T8	120T2	13C2
524	120T2	120T2	11Q2
527	120T2	120T2	85

CODE	INSERT COMBINATION ON SHELL		
	CAVITY A	CAVITY B	CAVITY C
528	150	150	11WQ2
529	35	35	62Q2
530	24	BLANK	85
532	20F12T8	121	34
533	120T2	C4	24T4
534	BLANK	Q11	85
535	150	35	24T4
536	BLANK	150	24T4
537	118Q2	118Q2	24T4
538	150	120T2	13C2
539	Q11	Q11	BLANK
540	120T2	C4	13C2
541	1C71	Q11	13C2
542	121	C4	Q6
543	120T2	Q11	13C2
544	120T2	120T2	24T4
545	C4	Q11	85
546	121	60A	100
547	BLANK	150	20Q4
548	150	35	20Q4
551	121	118Q2	24T4
552	150	Q11	11Q2
554	BLANK	118Q2	13C2
555	BLANK	71C1	13C2
556	BLANK	BLANK	62Q2
557	BLANK	Q11	62Q2
558	BLANK	Q11	BLANK
559	150	150	20Q4
560	150	Q11	85
561	150	120T2	85
562	121	BLANK	BLANK
563	24	24	34
564	BLANK	BLANK	34
565	150	24	34

CODE	INSERT COMBINATION ON SHELL		
	CAVITY A	CAVITY B	CAVITY C
566	150	121	BLANK
567	150	118Q2	BLANK
569	118Q2	118Q2	BLANK
570	Q11	150	11Q2
571	150	118Q2	13C2
572	150	C4	13C2
573	150	24	13C2
574	150	121	59
575	60A	150	34
576	150	150	Q6
577	1C71	118Q2	12F5C2
578	150	121	20Q4
579	C4	118Q2	85
580	150	BLANK	59
581	118Q2	118Q2	20Q4
582	BLANK	71C1	11Q2
584	121	121	59
585	20F12Q8	BLANK	11Q2
586	150	Q11	34
587	150	118Q2	85
588	Q11	Q11	11Q2
590	BLANK	Q11	Q6
591	20F12T8	150	100
592	BLANK	BLANK	11Q2
593	20F12Q8	121	BLANK
594	C	118Q2	85
596	BLANK	118Q2	11WQ2
597	150	121	Q6
598	20F12Q8	118Q2	13C2
599	C4	24	100
801	C4	Q11	59
802	BLANK	120T2	24T4
803	Q11	20F12Q8	11Q2
804	Q11	20F12Q8	17F12Q2
806	C4	60A	59
807	Q11	150	85
809	C4	C4	59

How to Order

FOR SHELL SIZE 2

CODE	INSERT COMBINATION ON SHELL		
	CAVITY A	CAVITY B	CAVITY C
810	Q11	Q11	13C2
811	150	150	12F5C2
812	60A	C2	13C2
813	BLANK	Q11	13C2
814	120T2	150	13C2
815	60A	35	24T4
817	20F12Q8	Q11	62Q2
818	60A	C2	24T4
819	60A	24	34
820	Q11	121	BLANK
822	Q11	35	100
823	20F12T8	118Q2	13C2
824	20F12Q8	BLANK	BLANK
825	20F12T8	BLANK	BLANK
826	150	20F12Q8	34
827	Q11	150	59
828	150	BLANK	85
829	120T2	BLANK	85
830	118Q2	120T2	BLANK

CODE	INSERT COMBINATION ON SHELL		
	CAVITY A	CAVITY B	CAVITY C
831	120T2	120T2	BLANK
832	Q11	121	100
833	150	150	17F12Q2
834	110R	150	17F12Q2
835	121	121	11Q2
838	Q11	BLANK	68Q2
839	60A	BLANK	34
840	150	110	11Q2
841	150	110	34
842	71C1	118Q2	12F5C2
843	110	110	BLANK
844	150	121	62F12
845	150	20F12Q8	13C2
846	C4	150	62F12
847	C4	150	11Q2
848	24	150	6Q6
849	150	150	10
850	150	110	13C2
851	36F36	150	85

CODE	INSERT COMBINATION ON SHELL		
	CAVITY A	CAVITY B	CAVITY C
852	150	121	11Q2
853	118Q2	150	11Q2
854	20F12Q8	118Q2	59
855	20F12Q8	Q11	100
856	BLANK	110	13C2
857	BLANK	36F36	BLANK
858	118Q2	118Q2	11Q2
859	150	36F36	13C2
860	150	118Q2	11Q2
861	118Q2	118Q2	59
862	150	118Q2	62Q2
863	Q11	Q11	17F12Q2
864	150	Q11	46Q2
865	118Q2	150	13C2
866	121	110	13C2
867	C4	C2	BLANK
868	150	118Q2	24T4

How to Order

FOR SHELL SIZE 3

CODE	INSERT COMBINATION ON SHELL					
	CAVITY A	CAVITY B	CAVITY C	CAVITY D	CAVITY E	CAVITY F
301	150	150	13C2	150	150	13C2
302	150	150	100	150	150	13C2
303	150	150	13C2	150	150	100
304	150	150	100	150	150	100
305	150	150	BLANK	150	150	BLANK
306	150	71C1	13C2	150	71C1	13C2
307	71C1	71C1	13C2	71C1	71C1	13C2
308	C2	C2	13C2	C2	150	100
309	150	150	13C2	150	71C1	100
310	C4	C4	13C2	BLANK	150	100
311	150	150	85	150	150	85
312	BLANK	BLANK	13C2	BLANK	BLANK	13C2
313	BLANK	BLANK	13C2	BLANK	BLANK	100
314	BLANK	BLANK	13C2	BLANK	150	100
315	150	150	13C2	150	150	BLANK
316	24	BLANK	13C2	150	150	BLANK
317	120T2	150	34	120T2	150	34
320	150	60A	100	150	60A	100
321	150	150	100	150	BLANK	BLANK
322	150	150	100	150	150	34
323	150	150	100	71C1	71C1	100
324	150	150	100	C2	BLANK	BLANK
325	150	150	13C2	C2	C2	13C2
326	150	71C1	100	150	150	100
327	150	71C1	100	150	150	13C2
328	C2	C2	13C2	150	150	13C2
329	C2	C2	13C2	C4	150	100
330	C4	C4	13C2	BLANK	BLANK	BLANK
331	71C1	150	100	150	150	100
332	C4	C4	13C2	C4	C4	85
333	71C1	71C1	100	71C1	71C1	100
334	71C1	71C1	BLANK	71C1	71C1	BLANK
335	71C1	C4	100	71C1	C4	100
336	BLANK	150	13C2	BLANK	150	13C2
337	BLANK	BLANK	100	BLANK	BLANK	13C2
338	C2	150	100	150	150	100
339	C2	C2	100	C2	C2	100
340	C2	C2	13C2	C2	C2	13C2
341	C4	C4	100	C4	C4	100
342	C4	C4	13C2	C4	C4	13C2

Notes

NSX T CAS connectors (insert code combination 310) are installed on equipment for use on T CAS (Traffic Collision Avoidance Systems)
C4 insert uses size 1 RF coaxial contacts (See page 5-42)

How to Order

FOR SHELL SIZE 3

CODE	INSERT COMBINATION ON SHELL					
	CAVITY A	CAVITY B	CAVITY C	CAVITY D	CAVITY E	CAVITY F
343	BLANK	150	100	150	150	13C2
344	24	150	13C2	24	150	13C2
345	60A	24	BLANK	60A	24	BLANK
346	150	24	100	150	150	34
348	C4	120T2	100	150	150	13C2
350	150	120T2	100	150	120T2	59
351	150	150	34	150	150	34
352	24	24	100	24	24	34
353	150	150	59	150	150	59
354	150	150	34	150	24	100
355	C4	150	13C2	BLANK	150	13C2
356	150	150	100	60A	60A	100
357	C4	C4	13C2	150	150	100
358	C4	C4	13C2	121	150	100
359	121	121	13C2	121	121	13C2
360	150	150	6T6	24	24	13C2
361	150	BLANK	13C2	150	150	BLANK
362	24	24	34	150	121	34
363	150	150	59	24	60A	59
364	60A	24	59	150	150	59
365	24	60A	100	24	60A	100
366	150	150	84	150	150	100
367	150	150	59	120T2	120T2	100
368	150	150	59	150	150	34
369	150	150	59	150	150	100
370	60A	60A	100	60A	60A	100
371	C4	C4	13C2	C2	150	100
372	150	150	BLANK	121	BLANK	13C2
373	150	150	13C2	120T2	120T2	100
374	150	150	68Q2	150	150	68Q2
375	150	150	100	150	150	68Q2
376	150	150	68Q2	150	150	BLANK
377	120T2	150	13C2	120T2	150	100
378	Q11	150	13C2	150	150	13C2
379	60A	150	34	150	150	34
380	C4	120T2	11Q2	C4	120T2	13C2
381	C4	120T2	11Q2	C4	120T2	11Q2
382	150	150	11Q2	150	150	11Q2
383	150	150	BLANK	Q11	150	85
384	Q11	150	85	150	150	BLANK

How to Order

FOR SHELL SIZE 3

CODE	INSERT COMBINATION ON SHELL					
	CAVITY A	CAVITY B	CAVITY C	CAVITY D	CAVITY E	CAVITY F
387	Q11	Q11	62Q2	Q11	Q11	62Q2
388	Q11	Q11	Q6	Q11	Q11	62Q2
389	Q11	150	11Q2	150	150	68Q2
390	150	150	11Q2	BLANK	BLANK	BLANK
393	BLANK	BLANK	13C2	150	BLANK	BLANK
394	BLANK	BLANK	13C2	150	BLANK	13C2
395	Q11	Q11	100	Q11	Q11	100
396	BLANK	BLANK	BLANK	BLANK	BLANK	BLANK
397	Q11	Q11	11Q2	Q11	150	11Q2
398	150	120T2	85	150	120T2	85
399	121	BLANK	6T6	60A	BLANK	13C2
601	60A	60A	13C2	60A	60A	13C2
602	Q11	150	11Q2	150	150	11Q2
603	24	BLANK	13C2	BLANK	BLANK	13C2
604	150	150	BLANK	150	150	100
605	150	Q11	11Q2	150	Q11	68Q2
607	24	24	13C2	24	24	100
608	24	24	13C2	24	24	68Q2
609	150	150	34	150	120T2	13C2
610	150	150	34	150	Q11	13C2
611	BLANK	150	13C2	BLANK	150	100
613	Q11	150	68Q2	150	150	13C2
614	150	150	100	BLANK	BLANK	BLANK
615	150	150	100	150	150	59
616	150	150	13C2	60A	120T2	34
617	60A	120T2	13C2	60A	120T2	13C2
618	150	150	Q6	150	150	Q6
619	Q11	Q11	11Q2	150	150	100
620	24	24	34	24	BLANK	34
621	150	150	34	150	60A	34
622	120T2	150	100	120T2	150	100
623	C4	C4	34	C4	C4	BLANK
624	150	150	13C2	60A	60A	34
626	C4	C4	13C2	120T2	150	100
627	C4	120T2	BLANK	C4	120T2	11Q2

How to Order

FOR SHELL SIZE 3

CODE	INSERT COMBINATION ON SHELL					
	CAVITY A	CAVITY B	CAVITY C	CAVITY D	CAVITY E	CAVITY F
629	C4	120T2	17F12Q2	C4	120T2	11Q2
630	C4	C4	BLANK	C4	C4	34
631	BLANK	150	13C2	BLANK	Q11	BLANK
632	BLANK	150	13C2	150	150	68Q2
633	150	150	100	Q11	Q11	11Q2
634	150	120T2	34	150	120T2	34
635	Q11	121	11Q2	Q11	121	11Q2
636	150	150	11Q2	150	150	100
637	BLANK	150	11Q2	150	150	68Q2
638	Q11	150	62Q2	Q11	150	62Q2
639	Q11	121	13C2	Q11	121	13C2
641	150	150	BLANK	150	150	13C2
642	121	60A	59	121	60A	13C2
643	Q11	Q11	Q6	Q11	Q11	Q6
644	150	Q11	34	Q11	Q11	34
645	150	150	11Q2	150	150	BLANK
646	150	BLANK	13C2	150	BLANK	BLANK
647	C4	120T2	17F12Q2	C4	120T2	13C2
648	BLANK	BLANK	17F12Q2	BLANK	BLANK	BLANK
649	150	150	15T6Q2	150	150	15T6Q2
651	Q11	118Q2	59	Q11	118Q2	59
652	121	121	34	121	121	34
653	C4	C4	13C2	C4	150	100
654	C4	150	62F12	C4	150	11Q2
655	36F36	150	11Q2	150	150	68Q2
656	71C1	71C1	85	71C1	71C1	85
657	Q11	Q11	34	120T2	150	13C2
660	C4	BLANK	BLANK	150	BLANK	13C2
661	Q11	Q11	85	Q11	Q11	85
662	BLANK	BLANK	13C2	150	150	100
664	Q11	Q11	100	118Q2	Q11	34

How to Order

MODIFICATION CODE

CODE	RECEPTACLE SHELL		PLUG SHELL	
00	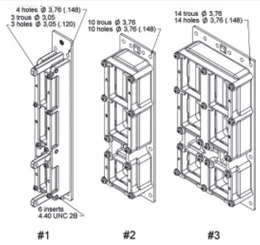	Ø 3.76 Ø (0.148) All Holes	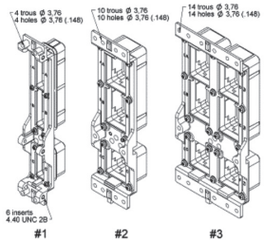	Ø 3.76 Ø (0.148) All Holes
01	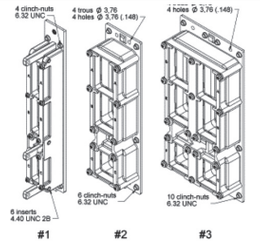	Shell Size 1: Qty = 4 6-32 UNC & Qty = 6 4-40 UNC Shell Size 2: Qty = 6 6-32 UNC Shell Size 3: Qty = 10 6-32 UNC	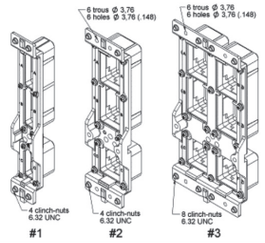	6-32 UNC Shell Size 1: Qty = 4 Shell Size 2: Qty = 4 Shell Size 3: Qty = 8 Size 1 Plug is Without Threaded Inserts
03	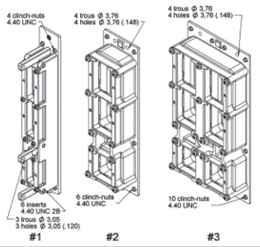	Shell Size 1: Qty = 6 4-40 UNC 2B & Qty = 3 Holes Ø 3.05 (0.120) Shell Size 2: Qty = 6 & Qty = 4 Holes Ø 3.76 (0.148) Shell Size 3: Qty = 10 & Qty = 4 Holes Ø 3.76 (0.148)	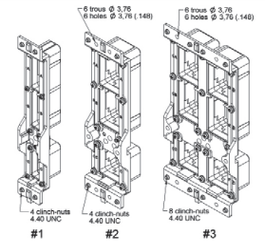	Shell Size 1 Plug is Without Threaded Inserts Shell Size 1: Qty = 4 4-40 UNC Shell Size 2: Qty= 4 4-40 UNC & Qty= 6 Soles Ø 3.76 (0.148) Shell Size 3: Qty = 8 & Qty= 6 Holes Ø 3.76 (0.148)
08	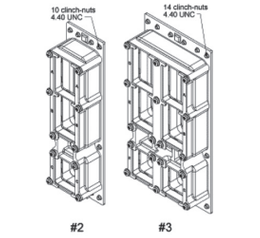	4-40 UNC All Holes Shell Sizes 2 and 3 Only	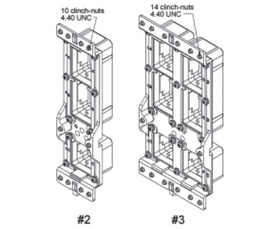	4-40 UNC All Holes Shell Sizes 2 and 3 Only
09	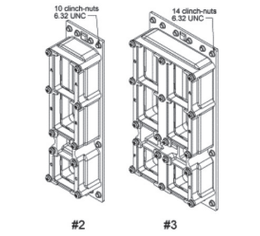	6-32 UNC All Holes Shell Sizes 2 and 3 Only	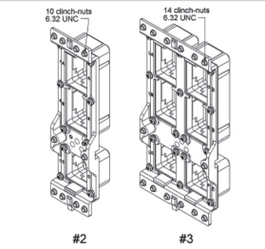	6-32 UNC All Holes Shell Sizes 2 and 3 Only
10	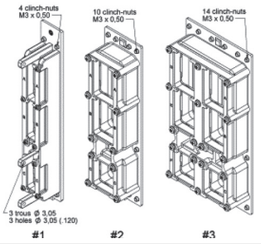	M3 x 0.50 All Holes Shell Size 1 Receptacle is Without Threaded Inserts	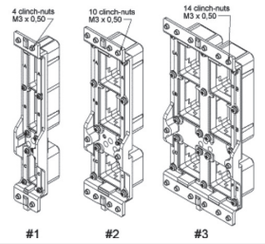	M3 x 0.50 All Holes Shell Size 1 Plug is Without Threaded Inserts

How to Order

CODE	RECEPTACLE SHELL		PLUG SHELL	
11	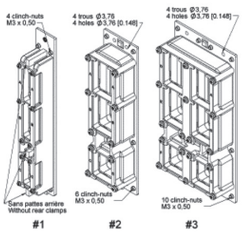	M3 x 0.50 Shell Size 1: Qty = 4 Shell Size 2: Qty = 6 Shell Size 3: Qty = 10 Size 1 Receptacle is Without Threaded Inserts	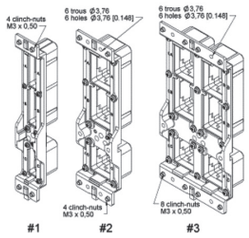	M3 x 0.50 Shell Size 1: Qty = 4 Shell Size 2: Qty = 4 Shell Size 3: Qty = 8 Shell Size 1 Plug is Without Threaded Inserts
12	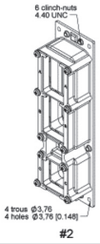	4-40 UNC 6 Holes (4 Close to the Bosses and 2 at the Polarization System Level) Available for Shell Size 2 Only	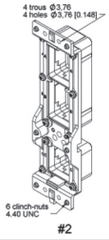	4-40 UNC 6 Holes (4 in to the Corner and 2 at the Polarization System Level) Available for Shell Size 2 Only
23	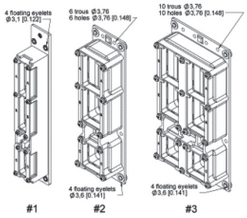	Shell Size 1: Qty = 4 Floating Eyelets Ø 3.1 (0.122) Shell Size 2: Qty = 6 Ø 3.76 (0.148) + 4 Floating Eyelets Shell Size 3: Qty = 10 Ø 3.76 (0.148) + 4 Floating Eyelets	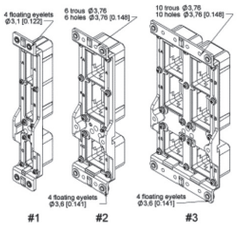	Shell Size 1: Ø 3.1 Ø (0.122) Shell Size 2 and 3: Ø 3.6 Ø (0.141) 4 Floating Eyelets

POLARIZATION CODE

POSITION OF POLARIZATION KEYS AND POSTS

Connectors are shown front side, with “RADIALL” upward.

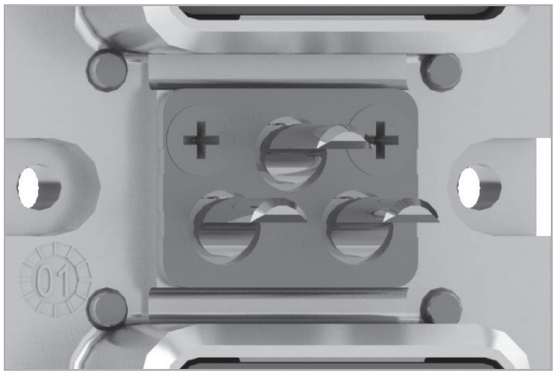

POSTS

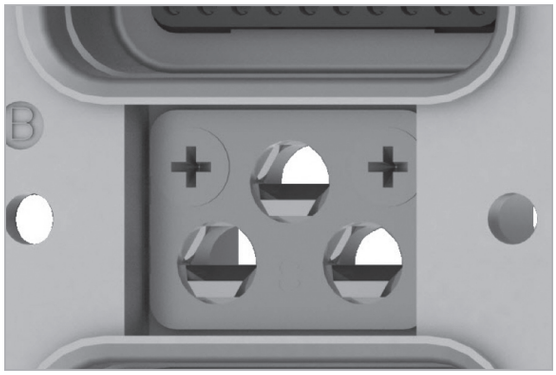

KEYS

POSITION CODING

- Dark area represents the polarizing post
- Clear portion represents the key hole

1

2

3

4

5

6

How to Order

POLARIZATION CODE TABLE

CODE NUMBER	RECEPTACLE SHELL			PLUG SHELL		
	LEFT KEY	CENTER KEY	RIGHT KEY	LEFT POST	CENTER POST	RIGHT POST
00	-	-	-	-	-	-
01	4	4	4	1	1	1
02	4	4	3	2	1	1
03	4	4	2	3	1	1
04	4	4	1	4	1	1
05	4	4	6	5	1	1
06	4	4	5	6	1	1
07	5	4	4	1	1	6
08	5	4	3	2	1	6
09	5	4	2	3	1	6
10	5	4	1	4	1	6
11	5	4	6	5	1	6
12	5	4	5	6	1	6
13	6	4	4	1	1	5
14	6	4	3	2	1	5
15	6	4	2	3	1	5
16	6	4	1	4	1	5
17	6	4	6	5	1	5
18	6	4	5	6	1	5
19	1	4	4	1	1	4
20	1	4	3	2	1	4
21	1	4	2	3	1	4
22	1	4	1	4	1	4
23	1	4	6	5	1	4
24	1	4	5	6	1	4
25	2	4	4	1	1	3
26	2	4	3	2	1	3
27	2	4	2	3	1	3
28	2	4	1	4	1	3
29	2	4	6	5	1	3
30	2	4	5	6	1	3
31	3	4	4	1	1	2
32	3	4	3	2	1	2
33	3	4	2	3	1	2
34	3	4	1	4	1	2
35	3	4	6	6	1	2
36	3	4	5	5	1	2
37	4	3	4	1	2	1
38	4	3	3	2	2	1
39	4	3	2	3	2	1
40	4	3	1	4	2	1
41	4	3	6	5	2	1
42	4	3	5	6	2	1
43	5	3	4	1	2	6
44	5	3	3	2	2	6
45	5	3	2	3	2	6
46	5	3	1	4	2	6
47	5	3	6	5	2	6
48	5	3	5	6	2	6
49	6	3	4	1	2	5

CODE NUMBER	RECEPTACLE SHELL			PLUG SHELL		
	LEFT KEY	CENTER KEY	RIGHT KEY	LEFT POST	CENTER POST	RIGHT POST
50	6	3	3	2	2	5
51	6	3	2	3	2	5
52	6	3	1	4	2	5
53	6	3	6	5	2	5
54	6	3	5	6	2	5
55	1	3	4	1	2	4
56	1	3	3	2	2	4
57	1	3	2	3	2	4
58	1	3	1	4	2	4
59	1	3	6	5	2	4
60	1	3	5	6	2	4
61	2	3	4	1	2	3
62	2	3	3	2	2	3
63	2	3	2	3	2	3
64	2	3	1	4	2	3
65	2	3	6	5	2	3
66	2	3	5	6	2	3
67	3	3	4	1	2	2
68	3	3	3	2	2	2
69	3	3	2	3	2	2
70	3	3	1	4	2	2
71	3	3	6	5	2	2
72	3	3	5	6	2	2
73	4	2	4	1	3	1
74	4	2	3	2	3	1
75	4	2	2	3	3	1
76	4	2	1	4	3	1
77	4	2	6	5	3	1
78	4	2	5	6	3	1
79	5	2	4	1	3	6
80	5	2	3	2	3	6
81	5	2	2	3	3	6
82	5	2	1	4	3	6
83	5	2	6	5	3	6
84	5	2	5	6	3	6
85	6	2	4	1	3	5
86	6	2	3	2	3	5
87	6	2	2	3	3	5
88	6	2	1	4	3	5
89	6	2	6	5	3	5
90	6	2	5	6	3	5
91	1	2	4	1	3	4
92	1	2	3	2	3	4
93	1	2	2	3	3	4
94	1	2	1	4	3	4
95	1	2	6	5	3	4
96	1	2	5	6	3	4
97	2	2	4	1	3	3
98	2	2	3	2	3	3
99	2	2	2	3	3	3

How to Order

CODE NUMBER	RECEPTACLE SHELL			PLUG SHELL		
	LEFT KEY	CENTER KEY	RIGHT KEY	LEFT POST	CENTER POST	RIGHT POST
100	2	2	1	4	3	3
101	2	2	6	5	3	3
102	2	2	5	6	3	3
103	3	2	4	1	3	2
104	3	2	3	2	3	2
105	3	2	2	3	3	2
106	3	2	1	4	3	2
107	3	2	6	5	3	2
108	3	2	5	6	3	2
109	4	1	4	1	4	1
110	4	1	3	2	4	1
111	4	1	2	3	4	1
112	4	1	1	4	4	1
113	4	1	6	5	4	1
114	4	1	5	6	4	1
115	5	1	4	1	4	6
116	5	1	3	2	4	6
117	5	1	2	3	4	6
118	5	1	1	4	4	6
119	5	1	6	5	4	6
120	5	1	5	6	4	6
121	6	1	4	1	4	5
122	6	1	3	2	4	5
123	6	1	2	3	4	5
124	6	1	1	4	4	5
125	6	1	6	5	4	5
126	6	1	5	6	4	5
127	1	1	4	1	4	4
128	1	1	3	2	4	4
129	1	1	2	3	4	4
130	1	1	1	4	4	4
131	1	1	6	5	4	4
132	1	1	5	6	4	4
133	2	1	4	1	4	3
134	2	1	3	2	4	3
135	2	1	2	3	4	3
136	2	1	1	4	4	3
137	2	1	6	5	4	3
138	2	1	5	6	4	3
139	3	1	4	1	4	2
140	3	1	3	2	4	2
141	3	1	2	3	4	2
142	3	1	1	4	4	2
143	3	1	6	5	4	2
144	3	1	5	6	4	2
145	4	6	4	1	5	1
146	4	6	3	2	5	1
147	4	6	2	3	5	1
148	4	6	1	4	5	1
149	4	6	6	5	5	1

CODE NUMBER	RECEPTACLE SHELL			PLUG SHELL		
	LEFT KEY	CENTER KEY	RIGHT KEY	LEFT POST	CENTER POST	RIGHT POST
150	4	6	5	6	5	1
151	5	6	4	1	5	6
152	5	6	3	2	5	6
153	5	6	2	3	5	6
154	5	6	1	4	5	6
155	5	6	6	5	5	6
156	5	6	5	6	5	6
157	6	6	4	1	5	5
158	6	6	3	2	5	5
159	6	6	2	3	5	5
160	6	6	1	4	5	5
161	6	6	6	5	5	5
162	6	6	5	6	5	5
163	1	6	4	1	5	4
164	1	6	3	2	5	4
165	1	6	2	3	5	4
166	1	6	1	4	5	4
167	1	6	6	5	5	4
168	1	6	5	6	5	4
169	2	6	4	1	5	3
170	2	6	3	2	5	3
171	2	6	2	3	5	3
172	2	6	1	4	5	3
173	2	6	6	5	5	3
174	2	6	5	6	5	3
175	3	6	4	1	5	2
176	3	6	3	2	5	2
177	3	6	2	3	5	2
178	3	6	1	4	5	2
179	3	6	6	5	5	2
180	3	6	5	6	5	2
181	4	5	4	1	6	1
182	4	5	3	2	6	1
183	4	5	2	3	6	1
184	4	5	1	4	6	1
185	4	5	6	5	6	1
186	4	5	5	6	6	1
187	5	5	4	1	6	6
188	5	5	3	2	6	6
189	5	5	2	3	6	6
190	5	5	1	4	6	6
191	5	5	6	5	6	6
192	5	5	5	6	6	6
193	6	5	4	1	6	5
194	6	5	3	2	6	5
195	6	5	2	3	6	5
196	6	5	1	4	6	5
197	6	5	6	5	6	5
198	6	5	5	6	6	5
199	1	5	4	1	6	4

How to Order

CODE NUMBER	RECEPTACLE SHELL			PLUG SHELL		
	LEFT KEY	CENTER KEY	RIGHT KEY	LEFT POST	CENTER POST	RIGHT POST
200	1	5	3	2	6	4
201	1	5	2	3	6	4
202	1	5	1	4	6	4
203	1	5	6	5	6	4
203	1	5	6	5	6	4
204	1	5	5	6	6	4
205	2	5	4	1	6	3
206	2	5	3	2	6	3
207	2	5	2	3	6	3
208	2	5	1	4	6	3
209	2	5	6	5	6	3
210	2	5	5	6	6	3
211	3	5	4	1	6	2
212	3	5	3	2	6	2
213	3	5	2	3	6	2
214	3	5	1	4	6	2
215	3	5	6	5	6	2
216	3	5	5	6	6	2

Contacts

SIGNAL, POWER & GROUND CONTACTS CRIMP TERMINATION

CONTACT SIZE		22	22 REDUCED CRIMP BARREL	20	16	16 REDUCED CRIMP BARREL
Ins. Ext Tool (Metallic)	Radiall P/N	282885		282886	282546	
	Mil Spec P/N	M81969/1.01		M81969/1.02	M81969/1.03	
Ins. Ext Tool (Plastic)	Radiall P/N	282522		282549029	282515	-
	Mil Spec P/N	M81969/14.01		M81969/14.02	M81969/14.03	-
Positioner	Radiall P/N	282970		282971	282972	
	Mil Spec P/N	M22520/2.23		M22520/2.08	M22520/1.02	
Crimping Tool	Radiall P/N	282281		282281	282291	
	Mil Spec P/N	M22520/2.01		M22520/2.01	M22520/1.01	
Contact	Socket	620300 (1) Orange (2) Yellow	620301	620310 (1) Orange (2) Red	620330 (1) Orange (2) Blue	620331
	Pin	620200 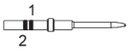 (1) Orange (2) Green	620201	620210 (1) Orange (2) Red	620230 (1) Orange (2) Blue	620231
Wire	Selector	4-3-3	5-4	5-6-7	6-5-4	5-4-3-2
	Striping Length ± .020 mm (in.)	3.5 (0.138)		4 (0.157)	6 (0.236)	
	Wire Outside Diameter mm (in.)	1.4 (0.055)	1.2 (0.047)	1.8 (0.071)	2.6 (0.102)	1.97 (0.077)
	Cross Section (mm^2)	0.38-0.21-0.14	0.093-0.055	0.21-0.38-0.60	1.34-0.93-0.60	0.93-0.60-0.38-0.21
	Wire Size (AWG)	22-24-26	28-30	20-22-24	16-18-20	18-20-22-24
Contact Arrangement		*See Contact Arrangement page 5-11 to 5-20*				

Contacts

CONTACT SIZE		12	12 REDUCED CRIMP BARREL	12
Ins. Ext Tool (Metallic)	Radiall P/N	282549004		-
	Mil Spec P/N	M81969/28.02		M81/969/19.02
Ins. Ext Tool (Plastic)	Radiall P/N	282549004		-
	Mil Spec P/N	M81969/14.04		-
Positioner	Radiall P/N	282972		282579
	Mil Spec P/N	M22520/1.02		M22520/1.11
Crimping Tool	Radiall P/N	282291		
	Mil Spec P/N	M22520/1.01		
Contact	Socket	620340 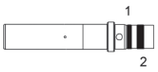 (1) Orange (2) Yellow	620341 (1) Orange	-
	Pin	620240 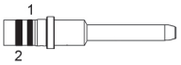 (1) Orange (2) Yellow	620241 (1) Orange	619240 (front release rear removable contact) 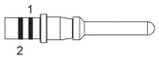 (1) Orange (2) Yellow
Wire	Selector	8-7-6	2-3-4-5	8-7-6
	Striping Length ± .020 mm (in.)	6 (0.236)		
	Wire Outside Diameter mm (in.)	3.4 (0.0134)	2.4 (0.094)	3.4 (0.134)
	Cross Section (mm^2)	3.18-1.91-1.34	0.93-0.60-0.38-0.21	3.18-1.91-1.34
	Wire Size (AWG)	12-14-16	18-20-22-24	12-14-16
Contact Arrangement		*See Contact Arrangement page 5-11 to 5-20*		

Notes

Radiall recommends plastic extraction tools for environmental cavities 22-20-16 and 12 (the metallic extraction tool leads to damage risk of triple silicon web).

Contacts

CONTACT SIZE		8	8 GROUNDED		5	
Ext Tool (Metallic)	Radiall P/N	Socket: 282549001 Pin: 282549012	282549012	282540001	282548	
	Mil Spec P/N	Socket: M81969/28.03 Pin: M81969/19.03	M81969/19.03	M81969/28.03	M81969/28.01	
Positioner	Radiall P/N	-	-	282588	282557	
	Mil Spec P/N	M22520/23.09	M22520/23.09	-	-	
Die	Radiall P/N	-	-	-	-	
	Mil Spec P/N	M22520/23.02	M22520/23.02	M22520/23.02	-	
Crimping Tool	Radiall P/N	-	-	-	282296	
	Mil Spec P/N	M22520/23.01	M22520/23.01	M22520/23.01		
Contact	Socket	619370 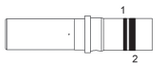 (1) Orange (2) Brown	-	619371 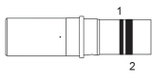 (1) Orange (2) Black	616361	616366
	Pin	619270 (front release rear removable contact) 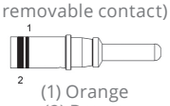 (1) Orange (2) Brown	619271 (front release rear removable contact) 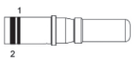 (1) Orange (2) Black	-	616261	616266
Wire	Selector	-	-	-	1-1	8-5
	Striping Length ± .020 mm (in.)	11.5 (0.453)	11.5 (0.453)	-	8.0 (0.315)	
	Wire Outside Diameter mm (in.)	5.7 (0.224)	5.7 (0.224)	-	3.4 (0.134)	5.7 (0.234)
	Cross Section (mm^2)	9-5	9-5	-	3.18-1.91	9-5
	Wire Size (AWG)	8-10	8-10	-	12-14	8-10
Contact Arrangement		*6P6*	*See Contact Arrangement page 5-11 to 5-20*			

Contacts

CHROMEL CONTACTS–CRIMP TERMINATION

CONTACT SIZE		22	20
Ins. Ext Tool	Radiall P/N	282885	282886
	Mil Spec P/N	M81969/1.01	M81969/1.02
Positioner	Radiall P/N	282970	282971
	Mil Spec P/N	M22520/2.23	M22520/2.08
Crimping Tool	Radiall P/N	282281	
	Mil Spec P/N	M22520/2.01	
Contact	Socket	620380 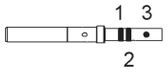 (1) Orange (2) Green (3) Yellow	620390 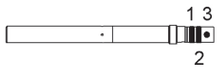 (1) Orange (2) Red (3) Yellow
	Pin	620280 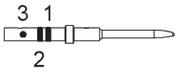 (1) Orange (2) Green (3) Yellow	620290 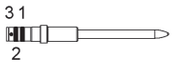 (1) Orange (2) Red (3) Yellow
Wire	Selector	4-3-3	7-6-5
	Striping Length ± .020 mm (in.)	3.5 (0.138)	4 (0.157)
	Wire Outside Diameter mm (in.)	1.4 (0.055)	1.8 (0.071)
	Cross Section (mm^2)	0.38-0.21-0.14	0.60-0.38-0.21
	Wire Size (AWG)	22-24-26	20-22-24
Contact Arrangement		*See Contact Arrangement page 5-11 to 5-20*	

Contacts

ALUMEL CONTACTS–CRIMP TERMINATION

CONTACT SIZE		22	20
Ins. Ext Tool	Radiall P/N	282885	282886
	Mil Spec P/N	M81969/1.01	M81969/1.02
Positioner	Radiall P/N	282970	282971
	Mil Spec P/N	M22520/2.23	M22520/2.08
Crimping Tool	Radiall P/N	282281	
	Mil Spec P/N	M22520/2.01	
Contact	Socket	620381 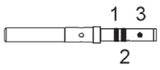 (1) Orange (2) Green (3) Black	620391 (1) Orange (2) Red (3) Black
	Pin	620281 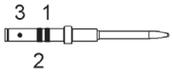 (1) Orange (2) Green (3) Black	620291 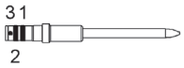 (1) Orange (2) Red (3) Black
Wire	Selector	4-3-3	7-6-5
	Striping Length ± .020 mm (in.)	3.5 (0.138)	4 (0.157)
	Wire Outside Diameter mm (in.)	1.4 (0.055)	1.8 (0.071)
	Cross Section (mm^2)	0.38-0.21-0.14	0.60-0.38-0.21
	Wire Size (AWG)	22-24-26	20-22-24
Contact Arrangement		*See Contact Arrangement page 5-11 to 5-20*	

Contacts

COAXIAL CONTACTS

SIZE 1

WIRE	TYPE	PART NUMBER	CONTACT	CONTACT ARRANGEMENTS
RG 214 RG 393	Pin	620001	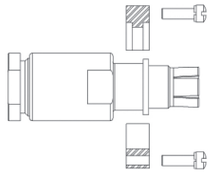	71C1-1C71-C2
	Socket	620101	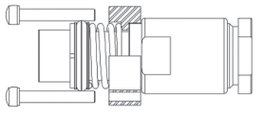	
		620101001	Identical to 620101 Without O-Ring	
Not Applicable TNC Termination	Socket	620101003	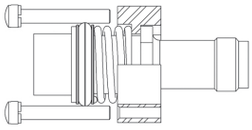	71C1-1C71-C2
		620101004	Identical to 620101003 Without O-Ring	
RG 223 RG 142	Pin	620003	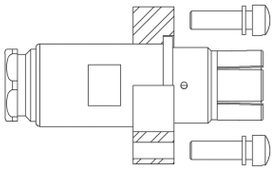	71C1-1C71-C2
	Socket	620103	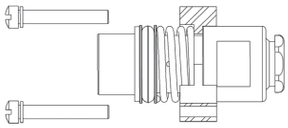	

Contacts

SIZE 1

WIRE	TYPE	PART NUMBER	CONTACT	CONTACT ARRANGEMENTS
RG 402 UT .141	Pin	620005	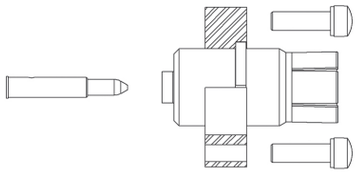	71C1-1C71-C2
NSA 935 358	Socket	620107	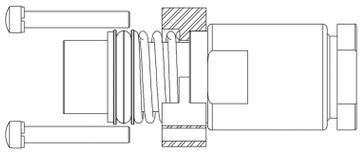	71C1-1C71-C2
		620107001	Identical to 620107 Without O-Ring	
ASNE 0406 WD and FILECA 1 703/94	Socket	620108	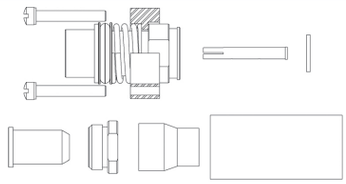	71C1-1C71-C2
		620108002	Identical to 620108 Without O-Ring	
RG 400 RG 142	Socket	620109	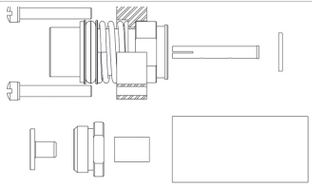	71C1-1C71-C2
		620109001	Identical to 620109 Without O-Ring	

Contacts

SIZE 1

WIRE	TYPE	PART NUMBER	CONTACT	CONTACT ARRANGEMENTS
RG 142	Pin	620011	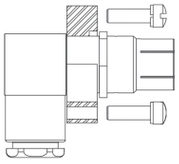	71C1-1C71-C2
Not Applicable SMA Termination	Pin	620044	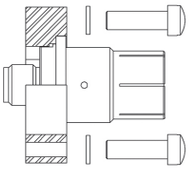	71C1-1C71-C2
ASNE0691WM	Socket	620101011	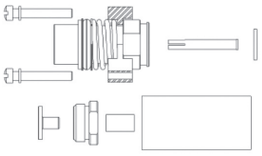	71C1-1C71-C2
ASNE0692WN	Socket	620101012	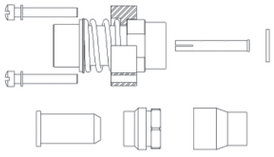	71C1-1C71-C2
ASNE0692WN	Pin	620001012	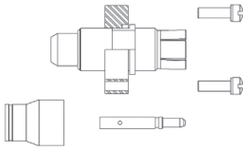	71C1-1C71-C2
RD316	Pin	620043001	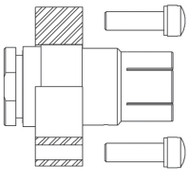	71C1-1C71-C2

DELIVERY CODE FOR T-CAS APPLICATION

CODE	CONNECTOR DETAILS		SOCKET CONTACTS FOR PLUG	PIN CONTACTS FOR RECEPTACLE
No Code	Contacts	Size 1 RF Coaxial Contacts to be Ordered Separately	620117 620146	620049
	Inserts (For Plug)	Mating Side Insert: Thermoplastic		
		Size 1 RF Coax Retention Plate: Stainless Steel		
	Inserts (For Receptacle)	Aluminum Alloy Nickel-Plated		
N	Connector Delivered with Coaxial Contacts		620116	620049

Contacts

SIZE 1 RF COAXIAL CONTACTS FOR NSX T-CAS CONNECTOR

CABLE	CONTACT TYPE	PART NUMBER	CONTACT
TNC TERMINATION	Socket	620116	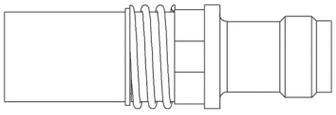
TNC TERMINATION	Pin	620017	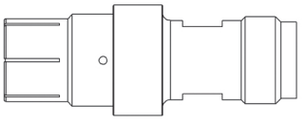
ASNE 0406WD ECS 311 201	Socket	620117	
RG 225 RG 393	Socket	620119100	
ECS 310801	Socket	620119102	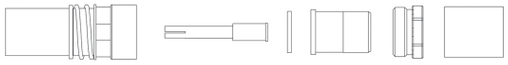
RG 142 RG 400 TIMES AA6343 ECS 3C142B ASNE 0293XF	Socket	620146	
RG 142	Pin	620046	
UT 141	Pin	620047	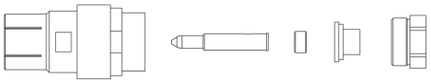
UT .085	Pin	620047010	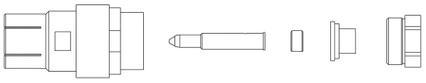
SMA TERMINATION	Pin	620049	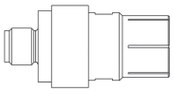
ASNE0692WN- ASNE0406WD	Pin	620019105	
ASNE0692WN	Socket	620119105	

Contacts

SIZE 8

WIRE	TYPE	PART NUMBER	CONTACT	FOR INSERT	INS/EXT TOOL
RG142 RG400 RG412 RG223 RG55U ASNE0293XF	Socket	619051	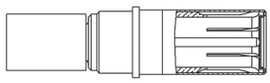	For All Size 8 Cavities	282549001 (M81969/28.03)
	Socket	619051001 Environmental	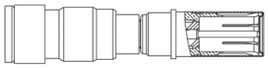		
	Pin	619151	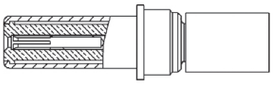		
	Pin	619151001 Environmental	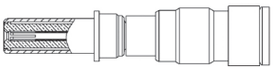		

Contacts

SIZE 8

WIRE	TYPE	PART NUMBER	CONTACT	FOR INSERT [1]	INS/EXT TOOL
RG316-KX22 -RG179 ASNE0639XY	Socket	619054	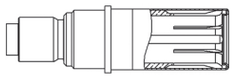	For All Size 8 Cavities	282549001 (M81969/28.03)
		619054001 Environmental	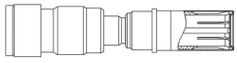		
	Pin	619154	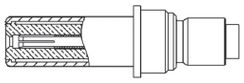		-
		619154001 Environmental	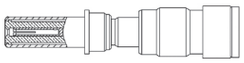		
Gore GSC-03-8174 8-00	Socket	619053	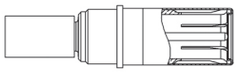		282549001 (M81969/28.03)
		619053001 Environmental	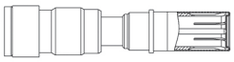		
	Pin	619153	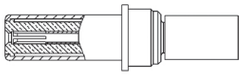		-
		619153001 Environmental	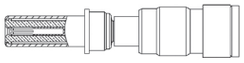		
RG180 RG195	Socket	619052	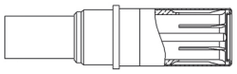		282549001 (M81969/28.03)
		619052001 Environmental	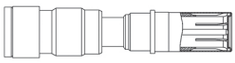		
	Pin	619152	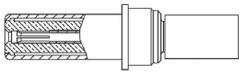		-
		619152001 Environmental	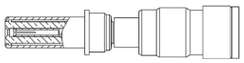		

Notes

1. Except for inserts 6T6 and 10T10.

Contacts

SIZE 8

WIRE	TYPE	PART NUMBER	CONTACT	FOR INSERT [1]	INS/EXT TOOL
ASNE0690WL	Socket	619054002	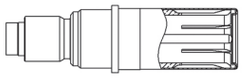	For All Size 8 Cavities	282549001 (M81969/28.03)
	Socket	619050	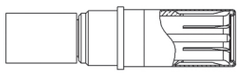		-
		619050001 Environmental	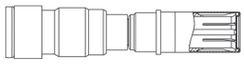		-
RG58 RG141	Pin	619150	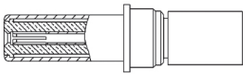		-
		619150001 Environmental	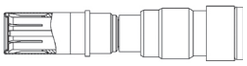		-
	Socket	619055	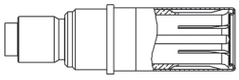		-
		619055001 Environmental	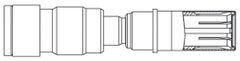		-
RG178 KX21 ASNE0633WG	Pin	619155	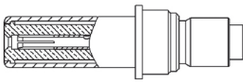		-
		619155001 Environmental	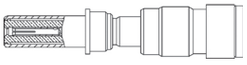		

Notes

1. Except for inserts 6T6 and 10T10.

Contacts

SIZE 8

WIRE	TYPE	PART NUMBER	CONTACT	FOR INSERT [1]	INS/EXT TOOL
RG316	Socket	619056	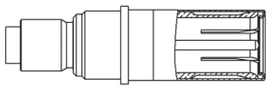	For All Size 8 Cavities	-
		619056001 Environmental	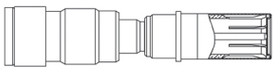		-
	Pin	619156	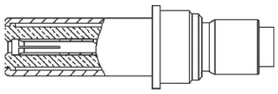		-
		619156001 Environmental	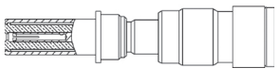		-

Notes

1. *Except for inserts 6T6 and 10T10*

Contacts

SIZE 5

WIRE	TYPE	PART NUMBER	CONTACT	FOR INSERT	INS/EXT TOOL
RG 58 RG 141	Pin	620120 [1]		For All Size 5 Cavities	282946 (M81969/28.01)
	Socket	620020 [1]			
RG 142 RG 223 RG 400	Pin	620121 [1]			282946 (M81969/28.01)
	Socket	620021 [1]			
ASNE0639XY RG 179 RG 316 KX 22	Pin	620122 [1]			282946 (M81969/28.01)
	Socket	620022 [1]			

Notes

1. Add 001 to these P/N to order for environmental contacts.

Contacts

SIZE 5

WIRE	TYPE	PART NUMBER	CONTACT	FOR INSERT	INS/EXT TOOL
ASNE 0633WG RG 178 KX 21	Pin	620123 [1]		For All Size 5 Cavities	282946 (M81969/28.01)
	Socket	620023 [1]			
RG 180 RG 195	Pin	620124 [1]			282946 (M81969/28.01)
	Socket	620024 [1]			
RD 316	Pin	620129 [1]			282946 (M81969/28.01)
	Socket	620029 [1]			

Notes

1. Add 001 to these P/N to order for environmental contacts.

Contacts

SIZE 5

WIRE	TYPE	PART NUMBER	CONTACT	FOR INSERT	INS/EXT TOOL
ADAMS-RUSSEL FC 11Z (per S280W503-1)	Pin	620182001		For All Size 5 Cavities	282946 (M81969/28.01)
	Socket	620082001			
ADAMS-RUSSEL FC 14Z (per S280W503-2)	Pin	620183001			282946 (M81969/28.01)
	Socket	620083001			
SMA Termination	Pin	620134	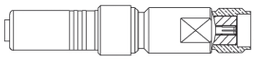		282946 (M81969/28.01)
ASNE0690WL	Pin	620184			282946 (M81969/28.01)
ASNE0690WL	Socket	620084			282946 (M81969/28.01)

Contacts

SIZE 16

WIRE	TYPE	PART NUMBER	CONTACT	FOR INSERT	INS/EXT TOOL
KX22 RG 316 RG 179 ASNE0639XY ASNE0632WK ASNE0752WS	Pin	618150		For All Size 16 Cavities	282892
	Socket	618050			
RG 178 KX 21 ASNE0633WG	Pin	618154			282892
	Socket	618054			

CONCENTRIC TWINAX CONTACTS

SIZE 5

WIRE	TYPE	PART NUMBER	FOR INSERT	INS/EXT TOOL
MIL C 17/17600002	Pin	616195001 [1]	For All Size 5 Cavities	282946 (M81969/28.01)
	Socket	616095001 [2]		

SIZE 10

WIRE	TYPE	PART NUMBER	FOR INSERT	INS/EXT TOOL
EN 3375-006 ASNE 0290XM	Pin	620167001	15T6Q2	(M81969/14-05)
	Socket	620067001		

Notes

1. 616195001 contact environmental version is 616195009
2. 616095001 contact environmental version is 616095009

Contacts

SIZE 8

WIRE	TYPE	PART NUMBER	CONTACT	FOR INSERT	INS/EXT TOOL
Tensolite (S280W502-1)	Pin	619165		For All Size 8 Cavities	282549001 (M81969/28.03)
	Socket	619065	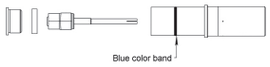		
	Pin	619166 [1] FR/RR	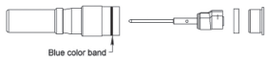		282549001 (M81969/28.03) for Ins. 282549012 (M81969/28.03) for Ext.
MIL C 17/17600002	Pin	619169001			282549001 (M81969/28.03)
	Socket	619069001			
		619069002 Environmental			

Notes

1. *FR/RR contacts are compatible with 6T6 and 10T10 inserts.*

Contacts

QUADRAX CONTACTS

SIZE 8

WIRE	TYPE	PART NUMBER (NON-ENVIRONMENTAL)	PART NUMBER (ENVIRONMENTAL)	INS/EXT TOOL
ABS1503KD24 (110 Ω)	Pin	620175010	620175011	282549001 (M81969/28.03 or M81969/14.06)
	Socket	620075010	620075011	
THERMAX 956S-4T200 GORE RCN8422 (110 Ω)	Pin	620179002	620179001	
	Socket	620079002	620079001	
TENSOLITE NF24Q100 (100 Ω)	Pin	620175050	620175051	
	Socket	620075050	620075051	
TENSOLITE NF26Q100 JSFY 18	Pin	620175021	620175020	
	Socket	620075021	620075020	

Contacts

LUXCIS® CONTACTS

The LuxCis® product range is a proven, flexible and always expending fiber optic interconnect solution offering high speed communication in aerospace and other harsh environments.

OPTICAL PERFORMANCES

	MULTI-MODE (PC) 850 / 1300 NM	SINGLE-MODE (UPC) 1310 / 1550 NM
Insertion Loss (IL) Mean (IEC 61300-3-4 Method B)	0.1 dB	0.15 dB
Return Loss (RL) (IEC 61300-3-6)	> 20 dB	> 50 dB

MECHANICAL & ENVIRONMENTAL CHARACTERISTICS

	STANDARD	PERFORMANCES
Thermal Cycling	SAE AS 13441 Method 1003.1	-55 °C/+125 °C (Cable Dependant)
Temperature Endurance	TIA/EIA 455-4	1,000 h at 125 °C (Cable Dependant)
Vibration	TIA/EIA 455-11	16.4 Grms
Shocks	TIA/EIA 455-14	50 G, 11 ms
Durability	TIA / EIA 364-09	500 Cycles
Maintenance Ageing	SAE AS 13441 Method 2002.1	10 Cycles
Cable Retention Cable Retention 1.8 mm Diameter 900 µm Diameter	SAE AS 13441 Method 2009.1	68 N 7 N
Humidity	TIA EIA 455-5	10 Cycles / 24 h 90% RH -25 °C / +65 °C

LUXCIS® CONTACTS PART NUMBERING SYSTEM

F725

LUXCIS® SERIES

FERRULE TYPE
00: PC ferrule for single-mode fiber
03: PC ferrule for 50/125 or 62,5/125 um multi-mode fiber
04: PC ferrule for 100/40 um multi-mode fiber
05: PC ferrule for 200/230 um multi-mode fiber
50: APC ferrule for single-mode fiber

CABLE TYPE AND DIAMETER
118: 900 µm cable
318: 1.2 mm cable with strengthening members, tight structure
419: 1.6 to 2.2 mm cable, loose structure
519: 1.6 to 2.2 mm cable, tight structure

Notes
Radiall can support you with your cable and harness assemblies. Please contact your sales representative.

Contacts

MIL-PRF-29504 CONTACTS

MIL-PRF-29504 fiber optic termini were developed several decades ago and are described several MIL standard documents. They fit into standard electrical cavities and do not require specific inserts. However, standard electrical connectors are not optimized for optical connections with small core fibers and MIL-PRF-29504 fiber optic termini show lower optical performances than more recent designs, such as the LuxCis®.

MIL-PRF-29504 fiber optic termini can replace MIL-PRF-29504/6 pin and MIL-PRF-29504/7 socket termini.

PERFORMANCES

Insertion Loss (IL)	0.8 dB Typical
Durability	Up to 500 Mating Cycles
Thermal Cycling	-65 °C / +125 °C (Cable Dependent)

MIL-PRF-29504 TYPE CONTACTS PART NUMBERING SYSTEM

CONTACT SIZE	PIN CONTACT PART NUMBER	SOCKET CONTACT PART NUMBER	FIBER DIAMETER (MM)	CABLE DIAMETER (MM)	FERULE MATERIAL	INSERTION / EXTRACTION TOOL
16	F724 004 000	F724 104 000	125	1.5	Ceramic	282515
16	F724 012 000	F724 111 000	125	1.8	Ceramic	
16	F724 010 000	F724 109 000	125	2	Ceramic	
16	F724 001 000	F724 101 000	140	1.5	Ceramic	
16	F724 040 000	F724 140 000	230	2	Metallic	
12	F724 204 000	F724 304 000	125	1.5	Ceramic	282549004
12	F724 242 000	F724 342 000	125	1.8	Ceramic	
12	F724 203 000	F724 303 000	140	1.5	Ceramic	

Notes

Radiall can support you with your cable and harness assemblies. Please contact your sales representative.

ACCESSORIES

QUADRAX - LUXCIS® ADAPTER

Adapters for NSX connectors' cavities allow evolution of your existing connectors. Now, you can get high speed connection with a connector that used to be equipped with Quadrax contacts. Quadrax-LuxCis® adapters will turn a size 8 Quadrax cavity into a LuxCis® cavity.

This solution offers the following characteristics:

- Compliant with any ARINC 600 Quadrax cavity
- Compatible with ML and MT LuxCis® designs
- Available for multi-mode application
- Compatible with Quadrax insertion and extraction tool

	PART NUMBER	DESCRIPTION
	620946001	Pin Quadrax Adapter for LuxCis® Contact in Quadrax FR Type Cavity with Sleeveholder
	620946002	Pin Quadrax Adapter for LuxCis® Contact in Quadrax RR Type Cavity with Sleeveholder
	620946003	Socket Quadrax Adapter for LuxCis® Contact in Quadrax RR Type Cavity
	620946004	Sleeve Holder for Pin Quadrax Adapter

EN 4531-101 (ABS 1379) ADAPTER FOR QUADRAX SIZE 8 CAVITY

Quadrax-EN4531 adapter will help you turning a size 8 Quadrax cavity into a EN4531 fiber optic link with the following characteristics:

- Arinc 600 compliant
- EN4626 compliant
- Compatible with all EN4531 contacts

	PART NUMBER	DESCRIPTION
	620946005	Pin Quadrax Adapter for EN4531 Contact
	620946006	Socket Quadrax Adapter for EN4531 Contact

Contacts

NSX E/N/H/C–REAR REMOVABLE CONTACTS

REAR REMOVABLE PC TAIL CONTACTS

SIZE 22 SOCKET CONTACTS

PART NUMBER	CONTACT TERMINATION	DIMENSION X MM (INCH)	C DIA. MM (INCH)	INS/EXT TOOL	FIGURE
620 305	YA	5.20 (0.205) 4.20 (0.165)	0.635 (0.025)	282890	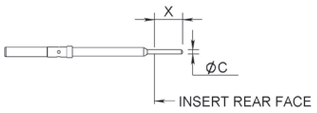
620305005	ZA				

SIZE 22 PIN CONTACTS

PART NUMBER	CONTACT TERMINATION	DIMENSION X MM (INCH)	C DIA. MM (INCH)	INS/EXT TOOL	FIGURE
620 202	Y	7.30 (.288) 6.30 (.250)	0.635 (0.025)	282890	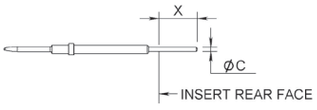
620202005	Z				

REAR REMOVABLE WIRE WRAP CONTACTS

SIZE 22 SOCKET CONTACTS

PART NUMBER	CONTACT TERMINATION	DIMENSION X MM (INCH)	INS/EXT TOOL	FIGURE
620302	K	7.70 (0.303) 6.30 (0.248)	282890	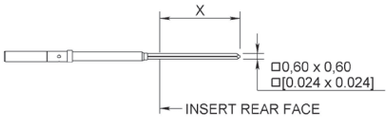
620303	V	10.70 (0.421) 9.30 (0.366)		
620308	W	12.30 (0.484) 13.70 (0.540)		

Contacts

HOW TO ORDER NSX F/G/K CONNECTORS

FOR FRONT REMOVABLE CONTACTS

Signal PC Tail contacts defined by termination code are delivered installed. Coaxial twinax and quadrax contacts are ordered separately.

NSX

SERIES PREFIX

CLASS

F: - Receptacle connectors, non-environmental
- Only size 22 insert cavities can be delivered in FR/FR PC tails or wire wrap contacts.
- Other insert cavities, if equipped with signal and power contacts in sizes 20, 16 and 12, will be delivered in RR/RR crimp version
- Coaxial, twinax and quadrax contacts shall be ordered separately as RR/RR crimp contacts

G: - Receptacle connectors, non-environmental
- Every insert cavities will be delivered in FR/FR PC tail contacts only.
- Size 1 contact will be delivered in RR/RR crimp version.
- Coaxial, twinax and quadrax contacts shall be ordered separately as FR/FR PC tail contacts.

K: - Receptacle connectors, non-environmental
- Only combinations including inserts 100 and 150 are available in class K. Inserts 100 and 150 will be fully populated with size 22 harpooned contacts.
- With class K, use PC tail contacts termination Y.
- Other inserts will be populated as per class G.

SHELL SIZE

1: 3 small cavities
2: 3 large cavities
3: 6 large cavities

SHELL STYLE

F: Nickel-plated receptacle
S: RoHS chromatation plated receptacle

INSERT COMBINATION CODE

See combination code pages 5-21 to 5-27 and contacts arrangement pages 5-11 to 5-20
T-cas application combination code: 310 (see page 5-24)

CONTACT TERMINATION

WITHOUT CONTACTS
X: Without contacts

WIRE WRAP
K: Wire wrap contact, 1 level (1 = 0.272)
V: Wire wrap contact, 2 levels (1 = 0.390)
W: Wire wrap contact, 3 levels (1 = 0.524)
L: Wire wrap contact, 4 levels (1 = 0.660)

PC TAIL CONTACTS

ROHS	GOLD	PRE-TINNED	LENGTH (IN.)
RA	YA	ZA	0.150
R	Y	Z	0.250
RB	YB	ZB	0.375
RC	YC	ZC	0.500

MODIFICATION CODE [1]

See pages 5-28 to 5-29

POLARIZATION CODE

See pages 5-30 to 5-32
Without code: polarization hardware is delivered unassembled

DELIVERY CODE FOR T-CAS APPLICATION

See page 5-41

Notes

1. *Polarization code 00, the connector is delivered without polarizing hardware.*
   Polarization code from 01 to 216, the connector is delivered with the polarization hardware assembled as defined by the code see page 5-31.

Contacts

NSX F/G/K–FRONT REMOVABLE PC TAIL

SIZE 22 SOCKET CONTACTS

PART NUMBER	CONTACT TERMINATION	DIMENSION X MM (INCH)	INS/EXT TOOL	COLOR BAND 1	COLOR BAND 2	FIGURE
620360	YA	4.60/3.80 (0.181/0.150)	282500	Orange	Green	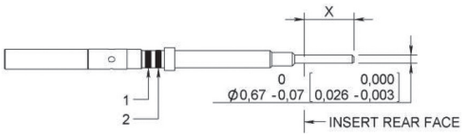
620360005	ZA					
620360500	RA					
620361	Y	7.20/6.40 (0.283/0.252)				
620361005	Z					
620361500	R					
620362	YB	10.30/9.50 (0.406/0.374)				
620362005	ZB					
620362500	RB					
620363	YC	13.60/12.80 (0.535/0.504)				
620363005	ZC					
620363500	RC					

SIZE 20 PIN CONTACTS

PART NUMBER	CONTACT TERMINATION	DIMENSION X MM (INCH)	INS/EXT TOOL	COLOR BAND 1	COLOR BAND 2	E DIA MM (INCH)	FIGURE
620214018	YA	4.60/3.80 (0.181/0.150)	282503	Orange	Red	0.85/0.80 (0.033/0.031)	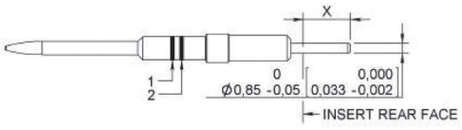
620214019	ZA						
620214518	RA						
620214010	Y	7.20/6.40 (0.283/0.252)	282503	Orange	Red		
620214013	Z						
620214510	R						
620214003	YB	10.30/9.50 (0.406/0.374)	282503	Orange	Red		
620214008	ZB						
620214503	RB						
620214021	YC	13.60/12.80 (0.535/0.504)					
620214022	ZC						
620214521	RC						

SIZE 16 PIN CONTACTS

PART NUMBER	CONTACT TERMINATION	DIMENSION X MM (INCH)	INS/EXT TOOL	COLOR BAND 1	COLOR BAND 2	E DIA MM (INCH)	FIGURE
620234018	YA	4.60/3.80 (0.181/0.150)	282504	Orange	Blue	1.32/1.22 (.052/.048)	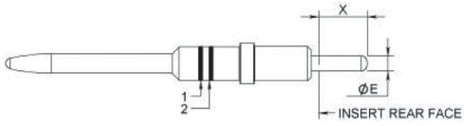
620234019	ZA						
620234518	RA						
620234004	Y	7.20/6.40 (0.283/0.252)	282504	Orange	Blue		
620234017	Z						
620234504	R						
620234003	YB	10.30/9.50 (0.406/0.374)	282504	Orange	Blue		
620234008	ZB						
620234503	RB						
620234021	YC	13.60/12.80 (0.535/0.504)					
620234022	ZC						
620234521	RC						

Contacts

SIZE 12 PIN CONTACTS

PART NUMBER	CONTACT TERMINATION	DIMENSION X MM (INCH)	INS/EXT TOOL	COLOR BAND 1	COLOR BAND 2	FIGURE
620244018	YA	4.60/3.80 (0.181/0.150)	282549005	Orange	Yellow	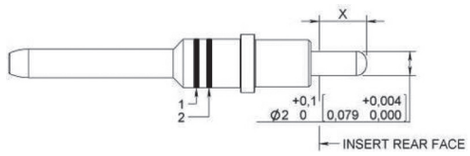
620244019	ZA					
620244518	RA					
620244005	Y	7.20/6.40 (0.283/0.252)	282549005	Orange	Yellow	
620244016	Z					
620244505	R					
620244003	YB	10.30/9.50 (0.406/0.374)	282549005	Orange	Yellow	
620244008	ZB					
620244503	RB					
620244021	YC	13.60/12.80 (0.535/0.504)				
620244022	ZC					
620244521	RC					

SIZE 22 SOCKET FRONT REMOVABLE WIRE WRAP CONTACTS

PART NUMBER	CONTACT TERMINATION	DIMENSION X MM (INCH)	INS/EXT TOOL	COLOR BAND 1	COLOR BAND 2	FIGURE
620350	K	6.9/0.4 (0.256/0.287)	282500	Orange	Green	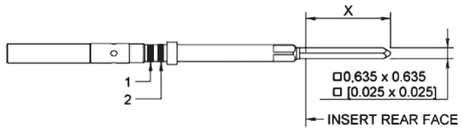
620351	V	9.9/0.4 (0.374/0.405)				
620352	W	13.3/0.4 (0.508/0.540)				
620353	L	16.8/0.4 (0.645/0.677)				

SIZE 16 PIN COAX CONTACTS

PART NUMBER	CONTACT TERMINATION	DIMENSION X MM (INCH)	INS/EXT TOOL
618155001	YA	3.8/4.6 (0.150/0.181)	282504
618155002	Y	6.4/7.2 (0.252/0.283)	
618155011	YB	9.5/10.3 (0.374/0.405)	

Contacts

SIZE 12 PIN COAX CONTACTS

PART NUMBER	CONTACT TERMINATION	DIMENSION X MM (INCH)	INS/EXT TOOL
618149017	YA	3.8/4.6 (0.150/0.181)	282549005
618149016	Y	6.4/7.2 (0.252/0.283)	
618149018	YB	9.5/10.3 (0.374/0.405)	
618149012	YC	12.8/13.6 (0.503/0.535)	
618149013	ZC	12.8/14.1 (0.503/0.558)	

SIZE 8 PIN COAX CONTACTS

PART NUMBER	CONTACT TERMINATION	DIMENSION X MM (INCH)	INS/EXT TOOL
619140009	YA	12.40/12.20 (0.488/0.480)	282549009
619140014	ZA		
619140509	RA		
619140010	Y	15.05/14.85 (0.592/0.584)	
619140013	Z		
619140510	R		
619140007	YB	18.15/17.95 (0.715/0.706)	
619140008	ZB		
619140507	RB		
619140011	YC	21.45/21.25 (0.844/0.836)	
619140012	ZC		
619140511	RC		

SIZE 5 PIN COAX CONTACTS

PART NUMBER	CONTACT TERMINATION	DIMENSION X MM (INCH)	INS/EXT TOOL
620133009	YA	4.60/3.80 (0.181/0.150)	282549006
620133509	RA		
620133006	Y	7.20/6.40 (0.283/0.252)	
620133007	Z		
620133506	R		
620133003	YB	10.30/9.50 (0.406/0.374)	
620133001	ZB		
620133503	RB		
620133010	YC	13.60/12.80 (0.535/0.504)	
620133510	RC		

Contacts

SIZE 8 PIN TRIAX PC TAIL FRONT RELEASE VERSION

PART NUMBER	CONTACT TERMINATION	DIMENSION X MM (INCH)	INS/EXT TOOL
619162014	YA	4.60/3.80 (0.181/0.150)	282549009
619162015	ZA		
619162514	RA		
619162011	Y	7.20/6.40 (0.283/0.252)	
619162012	Z		
619162511	R		
619162016	YB	10.30/9.50 (0.406/0.374)	
619162017	ZB		
619162516	RB		
619162009	YC	13.60/12.80 (0.535/0.504)	
619162010	ZC		
619162509	RC		

SIZE 8 PIN QUADRAX CONTACTS

PART NUMBER	CONTACT TERMINATION	DIMENSION X MM (INCH)	INS/EXT TOOL
620176009	YA	4.60/3.80 (0.181/0.150)	282549009
620176016	ZA		
620176509	RA		
620176008	Y	7.20/6.40 (0.283/0.252)	
620176010	Z		
620176508	R		
620176011	YB	10.30/9.50 (0.406/0.374)	
620176012	ZB		
620176511	RB		
620176013	YC	13.60/12.80 (0.535/0.504)	
620176014	ZC		
620176513	RC		

Contacts

DIMENSIONS

NON-ENVIRONMENTAL SIZE 1 PLUG SHELL

FRONT VIEW

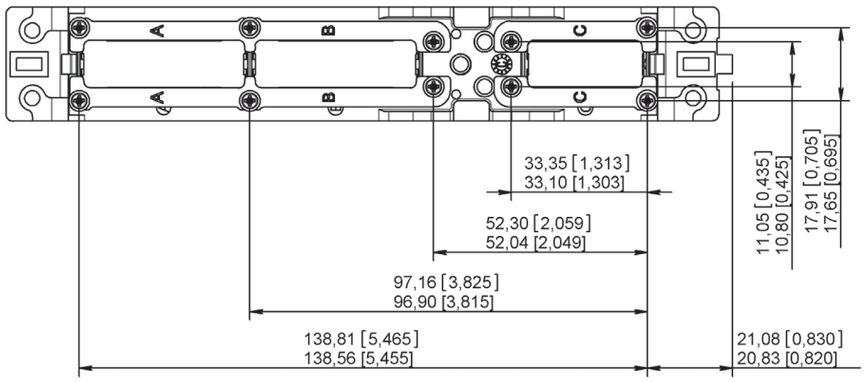

SIDE VIEW

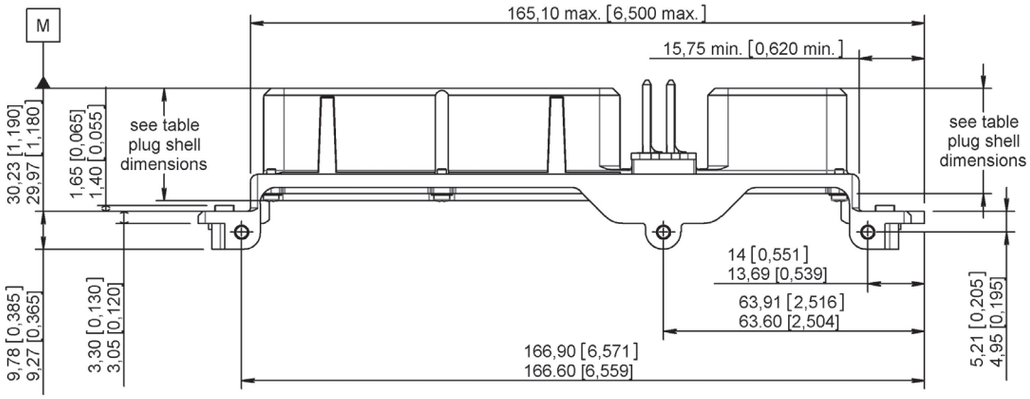

REAR VIEW

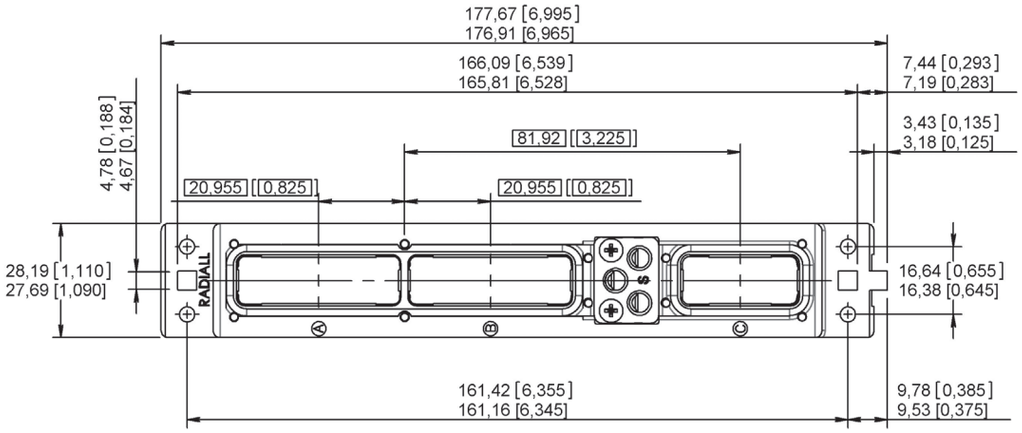

Contacts

NON-ENVIRONMENTAL SIZE 1 RECEPTACLE SHELL

FRONT VIEW

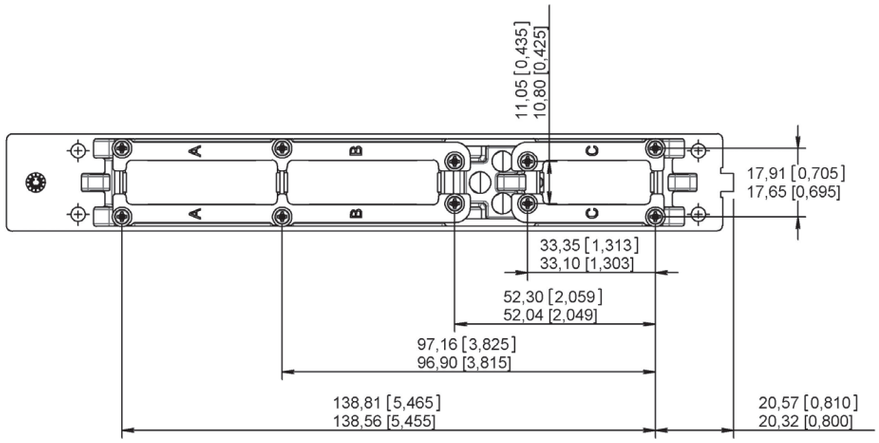

SIDE VIEW

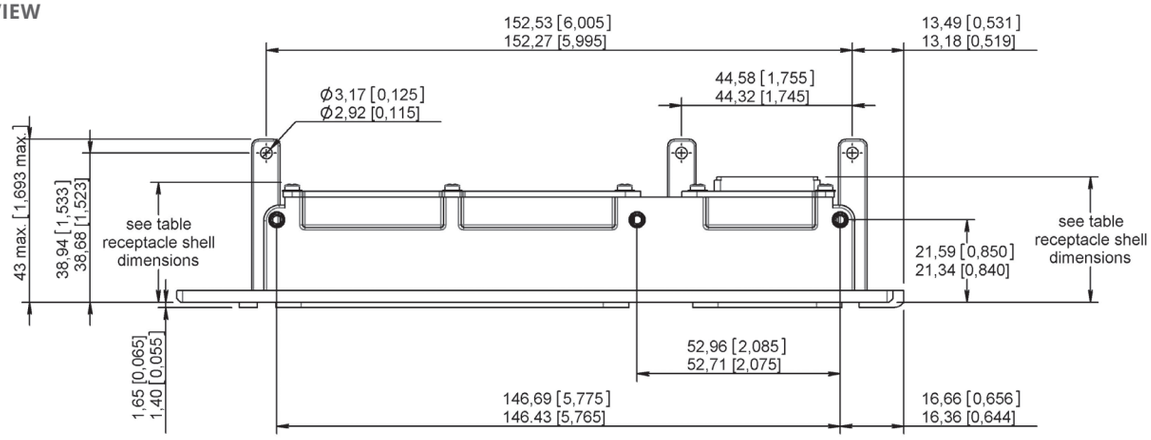

REAR VIEW

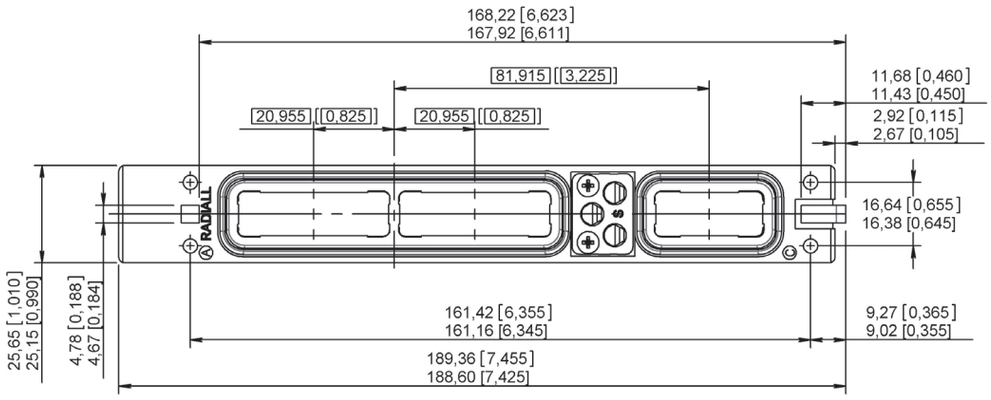

Contacts

NON-ENVIRONMENTAL SIZE 2 PLUG SHELL

FRONT VIEW

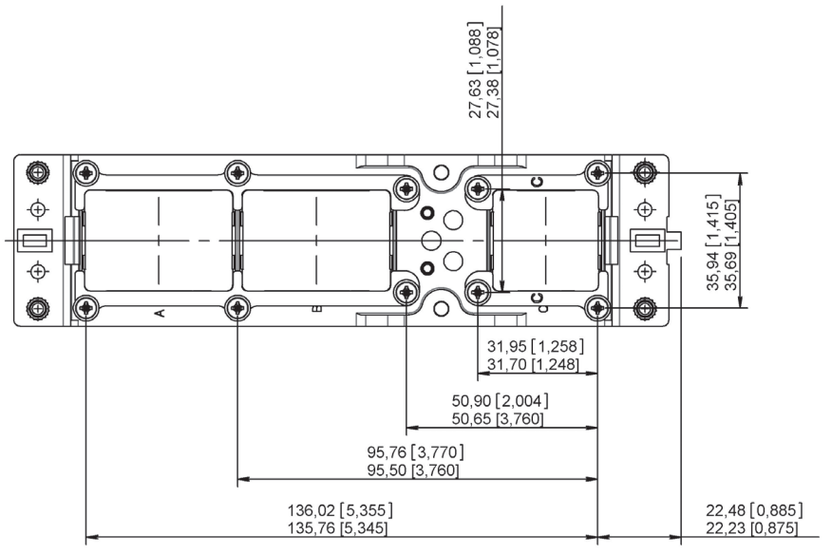

SIDE VIEW

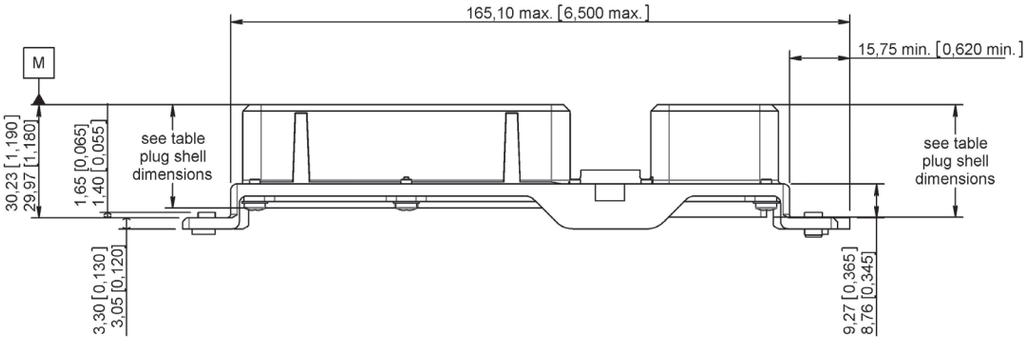

REAR VIEW

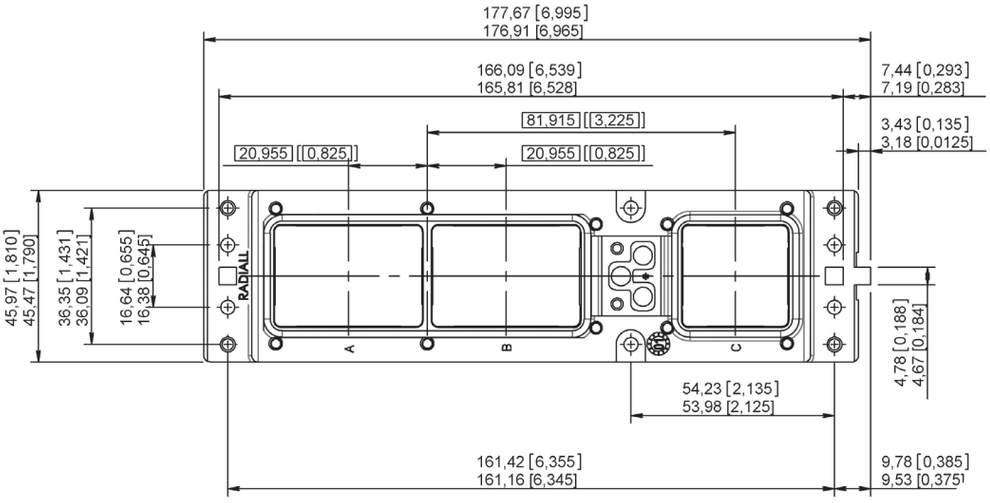

Contacts

NON-ENVIRONMENTAL SIZE 2 RECEPTACLE SHELL

FRONT VIEW

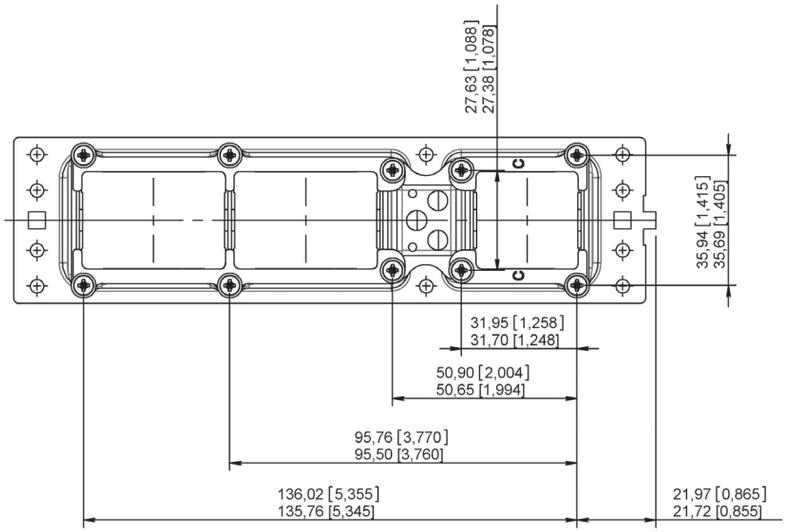

SIDE VIEW

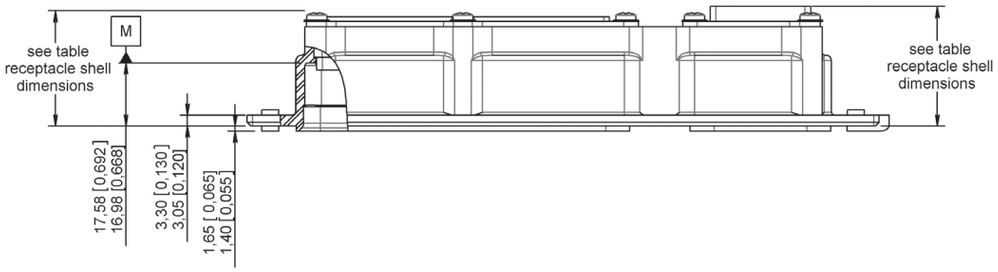

REAR VIEW

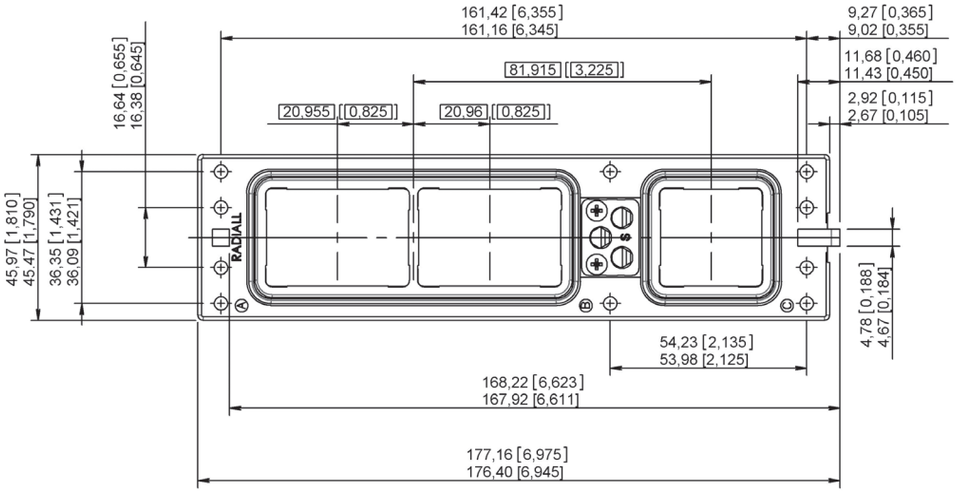

Contacts

NON-ENVIRONMENTAL SIZE 3 PLUG SHELL

FRONT VIEW

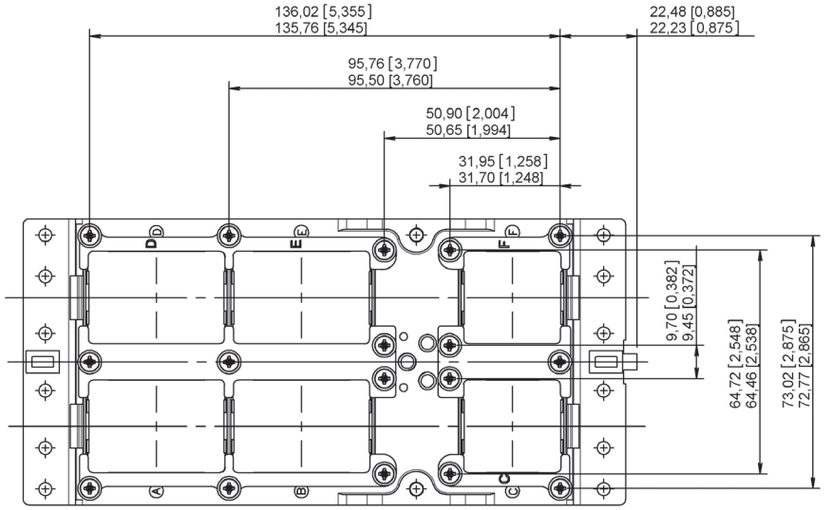

SIDE VIEW

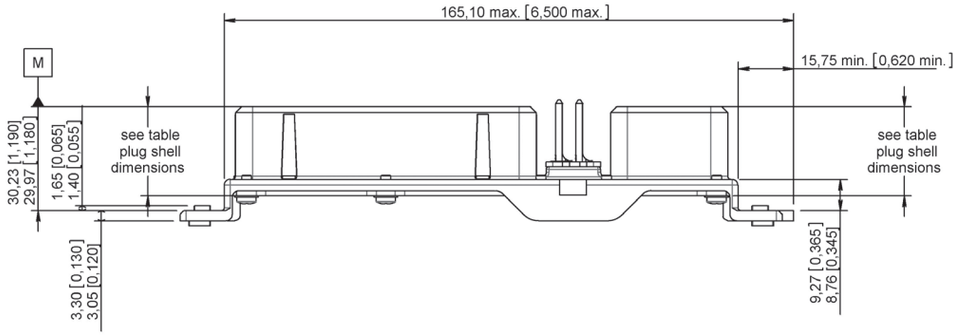

REAR VIEW

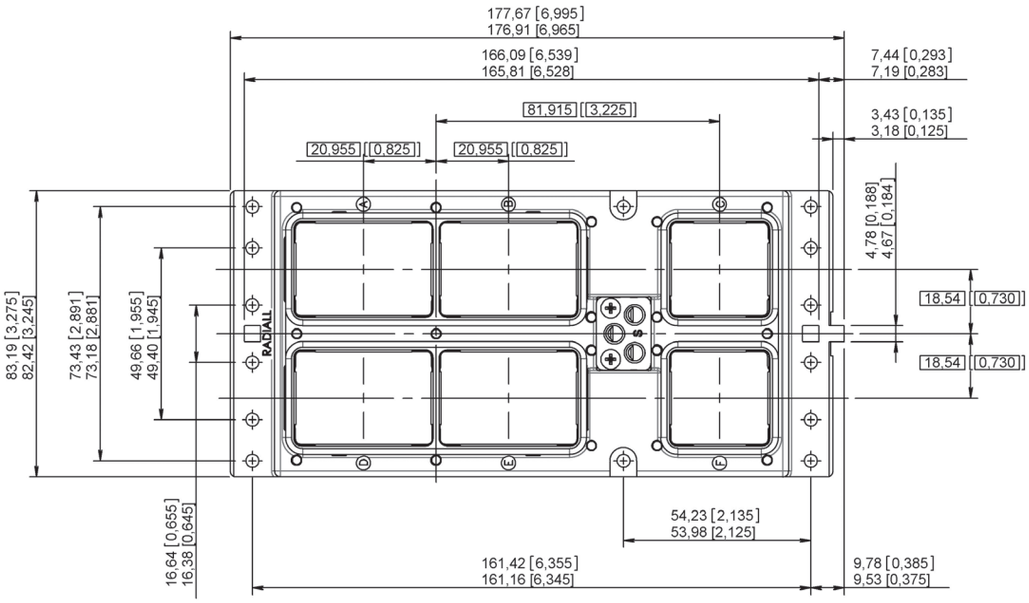

Contacts

NON-ENVIRONMENTAL SIZE 3 RECEPTACLE SHELL

FRONT VIEW

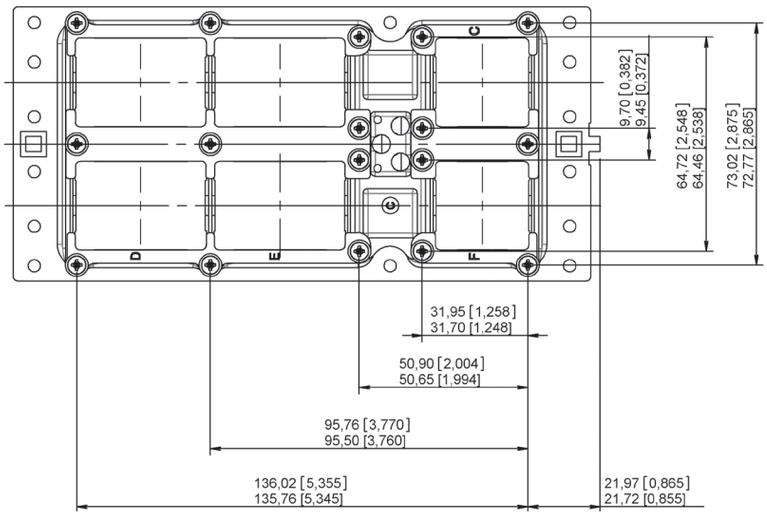

SIDE VIEW

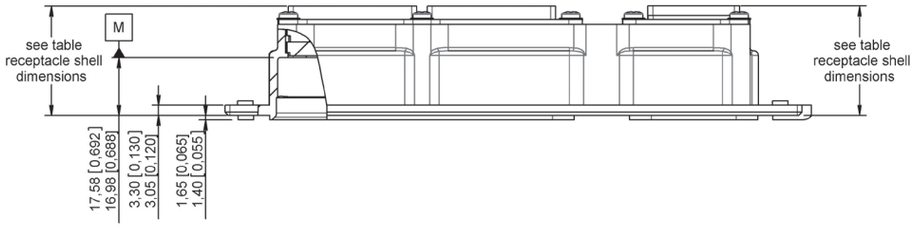

REAR VIEW

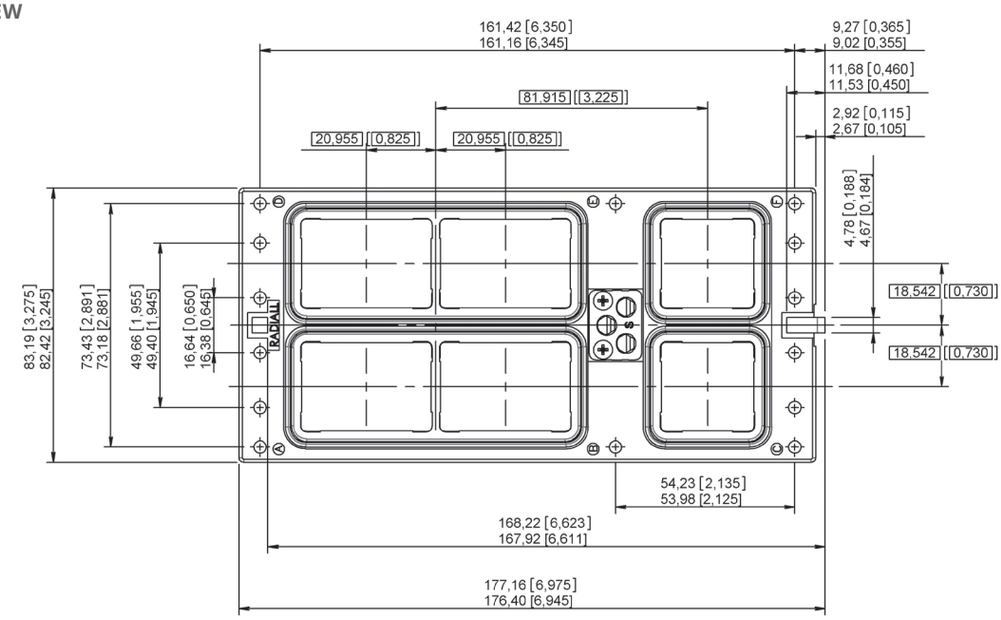

Contacts

ENVIRONMENTAL SIZE 1 - PLUG & RECEPTACLE

RECEPTACLE SHELL

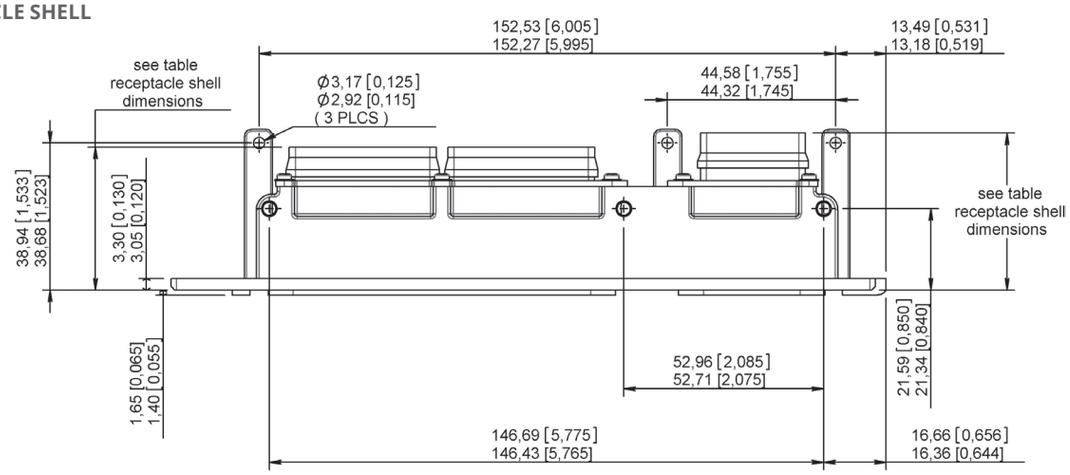

PLUG SHELL

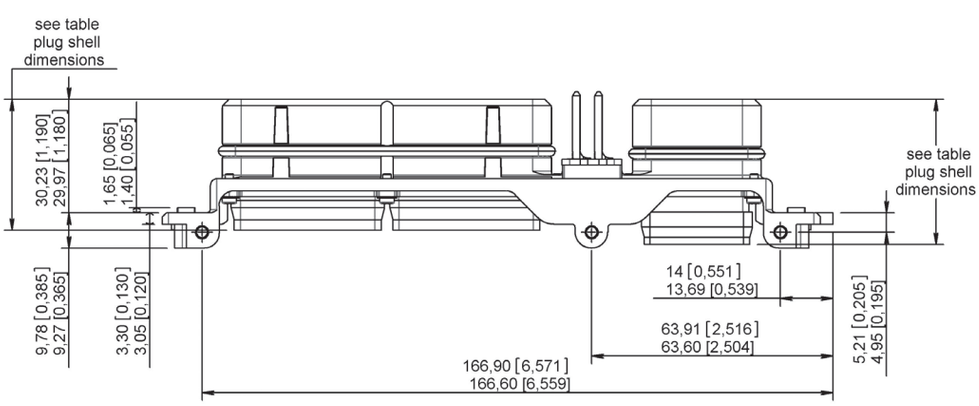

Contacts

ENVIRONMENTAL SIZE 2 & 3–PLUG & RECEPTACLE

RECEPTACLE SHELL

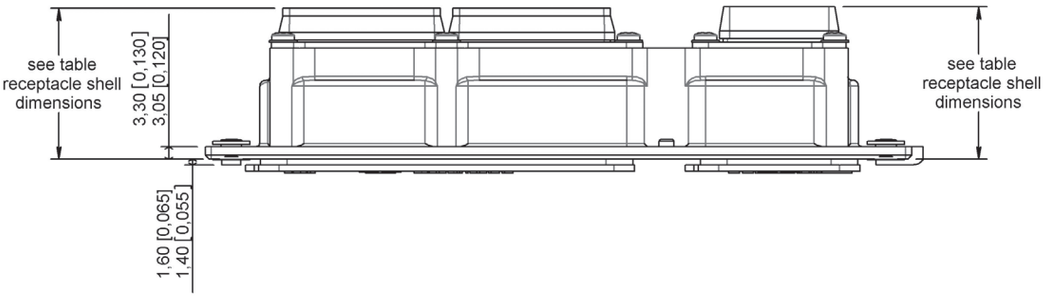

PLUG SHELL

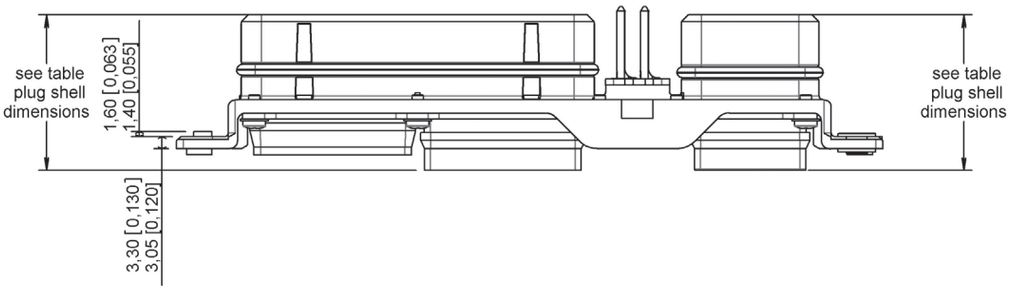

Contacts

EMI/RFI NSX SIZE 1 PLUG

How To Order - See Page 5-10

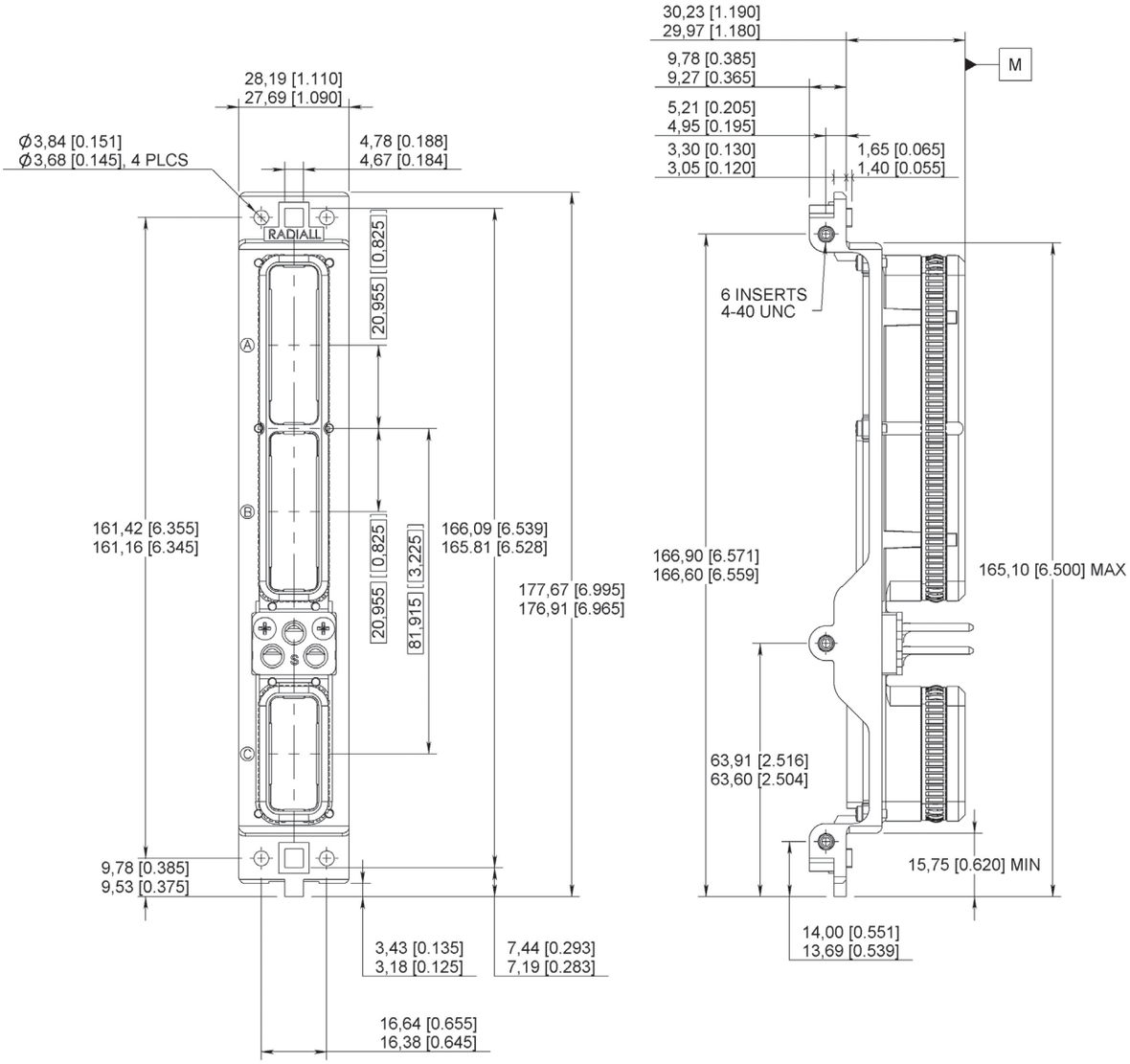

Contacts

EMI/RFI NSX SIZE 2 PLUG

How To Order - See Page 5-10

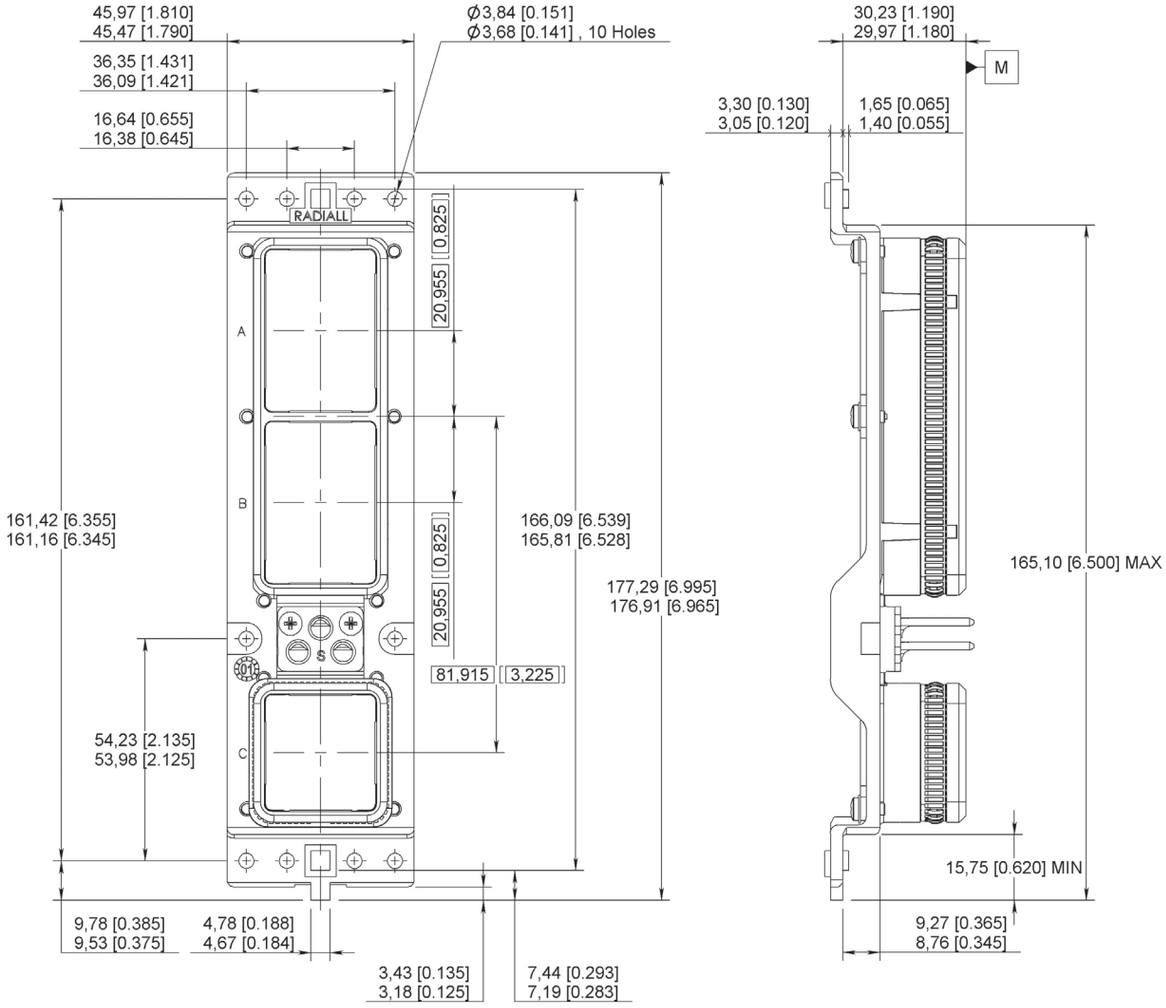

Contacts

EMI/RFI NSX SIZE 3 PLUG

How To Order - See Page 5-10

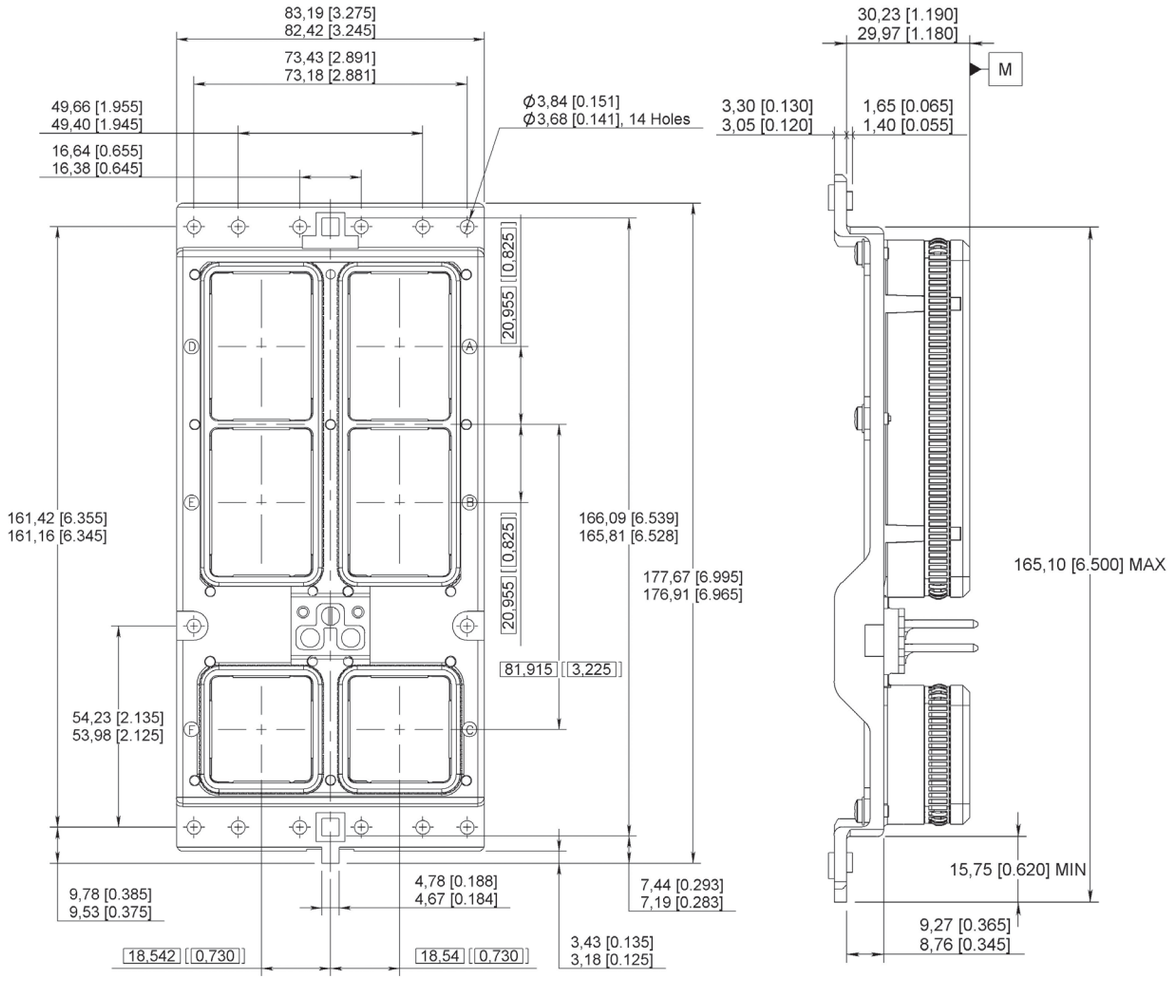

Contacts

PLUG SHELL DIMENSIONS

SHELL SIZE	CAVITY	CONTACT ARRANGEMENT	CONTACT SIZE	CLASS N MM (INCH) MAX	CLASSE E,H,C MM (INCH) MAX
1	A, B	60	22	28 (1.102)	35.5 (1.398)
		30T2	22	28 (1.102)	35.5 (1.398)
			8		36.8 (1.449)
		4C	5	30.5 (1.200)	-
	C	5C2	16	30.5 (1.200)	39.3 (1.547)
			12		
			5		
		40	22	28 (1.102)	35.5 (1.398)
2, 3	A, B, D, E	150	22	28 (1.102)	35.5 (1.398)
		121	22	28 (1.102)	35.5 (1.398)
			20	30.5 (1.200)	39.3 (1.547)
			16		
		120T2	22	28 (1.102)	35.5 (1.398)
			8		36.8 (1.449)
		118Q2	22	28 (1.102)	35.5 (1.398)
			8	28 (1.102)	36.8 (1.449)
		71C1	22	28 (1.102)	35.5 (1.398)
			1		-
		1C71	22	28 (1.102)	35.5 (1.398)
			1		-
		60	20	30.5 (1.200)	39.3 (1.547)
		24	12	30.5 (1.200)	39.3 (1.547)
		10T10	8	30.5 (1.200)	39.3 (1.547)
		Q11	8	30.5 (1.200)	39.3 (1.547)
		C2	1	28 (1.102)	-
		C4	1	28 (1.102)	-
		35	16	30.5 (1.200)	39.3 (1.547)
		110	22	28 (1.102)	-
			20	30.5 (1.200)	
			12		
		36F36	16 LuxCis®	30.5 (1.200)	39 (1.535)
		20F12Q8	8	30.5 (1.200)	39 (1.535)
			16 LuxCis®		

Contacts

PLUG SHELL DIMENSIONS

SHELL SIZE	CAVITY	CONTACT ARRANGEMENT	CONTACT SIZE	CLASS N MM (INCH) MAX	CLASSE E,H,C MM (INCH) MAX
2, 3	C, F	100	22	28 (1.102)	35.5 (1.398)
		85	22	28 (1.102)	35.5 (1.398)
			20		39.3 (1.547)
			16		
		34	20	30.5 (1.200)	39.3 (1.547)
			16		
		20T4	20	30.5 (1.200)	39.3 (1.547)
			8		
		20Q4	20	30.5 (1.200)	39.3 (1.547)
			8		
		13C2	20	30.5 (1.200)	39.3 (1.547)
			16		
			12		
			5		
		6T6	8	30.5 (1.200)	39.3 (1.547)
		Q6	8	30.5 (1.200)	39.3 (1.547)
		62Q2	22	28 (1.102)	36.8 (1.449)
			16		
			8		
		68Q2	22	28 (1.102)	35.5 (1.398)
			8		36.8 (1.449)
		11Q2	20	30.5 (1.200)	39.3 (1.547)
			16		
			12		
			8		
		11WQ2	20	30.5 (1.200)	39.3 (1.547)
			16		
			12		
			8		
		59	22	28 (1.102)	35.5 (1.398)
			16	30.5 (1.200)	39.3 (1.547)
			12		
		12F5C2	16 LuxCis®	30.5 (1.200)	39 (1.535)
			16		
			5		
		17F12Q2	16 LuxCis®	30.5 (1.200)	39 (1.535)
			16		
			12		
			5		

Contacts

RECEPTACLE SHELL DIMENSIONS

SHELL SIZE	CAVITY	CONTACT ARRANGEMENT	CONTACT SIZE	CLASS N MM (INCH) MAX	CLASS E, C MM (INCH) MAX	CLASS F MM (INCH) MAX	CLASSE G MM (INCH) MAX
1	A, B	60	22	31 (1.220)	38.9 (1.531)	30.93/29.84 (1.218/1.175)	-
		30T2	22	31 (1.220)	38.9 (1.531)	30.93/29.84 (1.218/1.175)	30.93/29.84 (1.218/1.175)
			8		40.5 (1.594)		
		4C	5	33.45 (1.317)	-	-	30.93/29.84 (1.218/1.175)
	C	5C2	16	33.45 (1.317	43 (1.693)	-	30.93/29.84 (1.218/1.175)
			12				
			5				
		40	22	31 (1.220)	38.9 (1.531)	30.93/29.84 (1.218/1.175)	-
		4	12	33.45 (1.317)	43 (1.693)	-	-
2, 3	A, B, D, E	150	22	31 (1.220)	38.9 (1.531)	30.93/29.84 (1.218/1.175)	-
		121	22	31 (1.220)	38.9 (1.531)	30.93/29.84 (1.218/1.175)	30.93/29.84 (1.218/1.175)
			20	33.45 (1.317)	43 (1.693)	33.45 (1.317)	
			16				
		120T2	22	31 (1.220)	38.9 (1.531)	30.93/29.84 (1.218/1.175)	-
			8	31 (1.220)	40.5 (1.594)	30.93/29.84 (1.218/1.175)	-
		118Q2	22	31 (1.220)	38.9 (1.531)	30.93/29.84 (1.218/1.175)	-
			8	31 (1.220)	40.5 (1.594)	30.93/29.84 (1.218/1.175)	-
		71C1	22	31 (1.220)	38.9 (1.531)	30.93/29.84 (1.218/1.175)	-
			1		-		
		1C71	22	31 (1.220)	38.9 (1.531)	30.93/29.84 (1.218/1.175)	-
			1		-		
		60	20	33.45 (1.317)	43 (1.693)	-	30.93/29.84 (1.218/1.175)
		24	12	33.45 (1.317)	43 (1.693)	-	30.93/29.84 (1.218/1.175)
		10T10	8	33.45 (1.317)	43 (1.693)	-	30.93/29.84 (1.218/1.175)
		Q11	8	33.45 (1.317)	43 (1.693)	-	30.93/29.84 (1.218/1.175)
		C2	1	31 (1.220)	-	-	-
		C4	1	31 (1.220)	-	-	-
		35	16	33.45 (1.317)	43 (1.693)	-	30.93/29.84 (1.218/1.175)
		110	22	31 (1.220)	38.9 (1.531)	30.93/29.84 (1.218/1.175)	30.93/29.84 (1.218/1.175)
			20	33.45 (1.317)	43 (1.693)	33.45 (1.317)	
			12				

Contacts

RECEPTACLE SHELL DIMENSIONS

SHELL SIZE	CAVITY	CONTACT ARRANGEMENT	CONTACT SIZE	CLASS N MM (INCH) MAX	CLASS E, C MM (INCH) MAX	CLASS F MM (INCH) MAX	CLASSE G MM (INCH) MAX
2, 3	A, B, D, E	36F36	16 LuxCis®	35.5 (1.398)	44 (1.732)	-	-
		20F12Q8	16 LuxCis®	35.5 (1.398)	44 (1.732)	-	30.93/29.84 (1.218/1.175)
			8				
	C, F	100	22	31 (1.220)	38.9 (1.531)	30.93/29.84 (1.218/1.175)	-
		85	22	31 (1.220)	38.9 (1.531)	30.93/29.84 (1.218/1.175)	30.93/29.84 (1.218/1.175)
			20		40.5 (1.595)		
			16				
		34	20	33.45 (1.317)	43 (1.693)	-	30.93/29.84 (1.218/1.175)
			16				
		20T4	20	33.45 (1.317)	43 (1.693)	-	30.93/29.84 (1.218/1.175)
			8				
		20Q4	20	33.45 (1.317)	43 (1.693)	-	30.93/29.84 (1.218/1.175)
			8				
		13C2	20	33.45 (1.317)	43 (1.693)	-	30.93/29.84 (1.218/1.175)
			16				
			12				
			5				
		6T6	8	33.45 (1.317)	43 (1.693)	-	30.93/29.84 (1.218/1.175)
		Q6	8	33.45 (1.317)	43 (1.693)	-	30.93/29.84 (1.218/1.175)
		62Q2	22	31 (1.220)	38.9 (1.531)	30.93/29.84 (1.218/1.175)	30.93/29.84 (1.218/1.175)
			16		40.5 (1.595)		
			8				
		68Q2	22	31 (1.220)	38.9 (1.531)	30.93/29.84 (1.218/1.175)	30.93/29.84 (1.218/1.175)
			8		40.5 (1.595)		
		11Q2	20	33.45 (1.317)	43 (1.693)	-	30.93/29.84 (1.218/1.175)
			16				
			12				
			8				
		11WQ2	20	33.45 (1.317)	43 (1.693)	-	30.93/29.84 (1.218/1.175)
			16				
			12				
			8				
		59	22	31 (1.220)	38.9 (1.531)	30.93/29.84 (1.218/1.175)	30.93/29.84 (1.218/1.175)
			16	33.45 (1.317)	43 (1.693)	33.45 (1.317)	
			12				
		12F5C2	16 LuxCis®	35.5 (1.398)	44 (1.732)	-	-
			16				
			5				
		17F12Q2	16 LuxCis®	35.5 (1.398)	44 (1.732)	-	30.93/29.84 (1.218/1.175)
			16				
			12				
			5				

Notes

CLASS F: size 22 contacts are front release and front removable. Other sizes are rear release and rear removable.
CLASS G: all contacts are front release and front removable.

Contacts

PANEL CUT-OUT

PANEL CUT OUT FOR PLUG SIZE 1, 2 & 3

SIZE 3

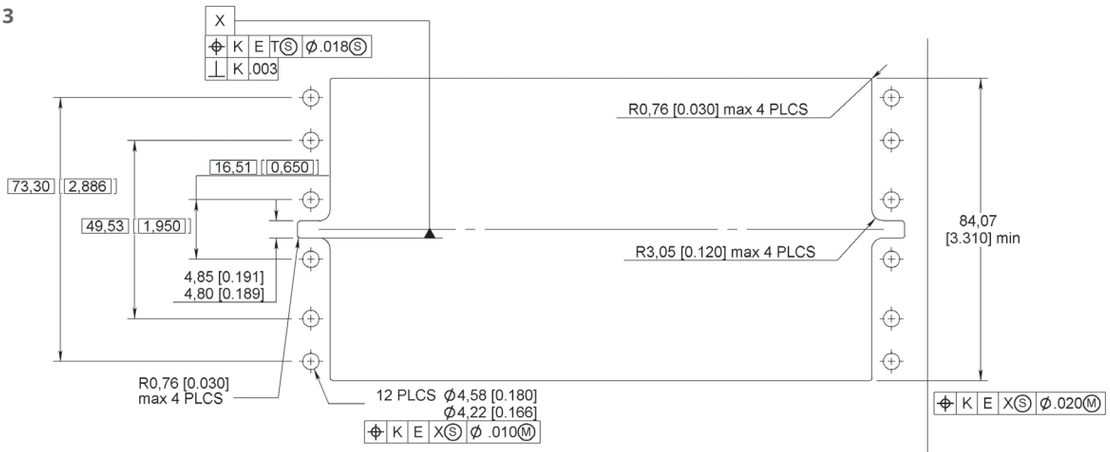

SIZE 2

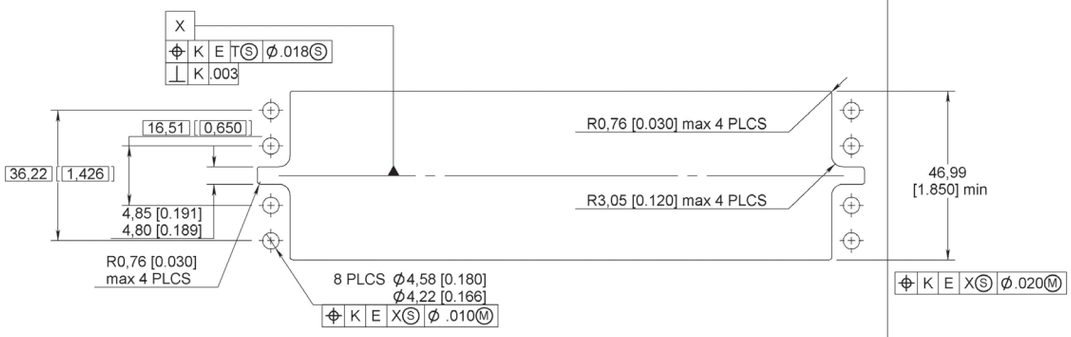

SIZE 1

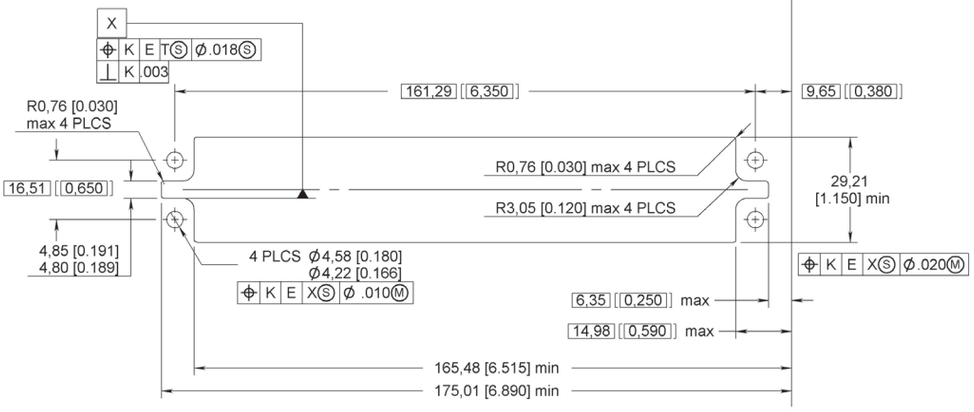

Contacts

PANEL CUT OUT FOR RECEPTACLE SIZE 1, 2 & 3

SIZE 3

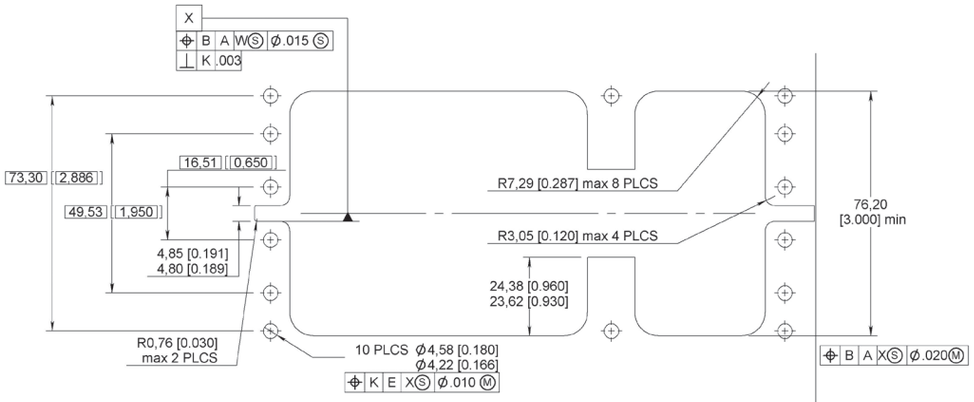

SIZE 2

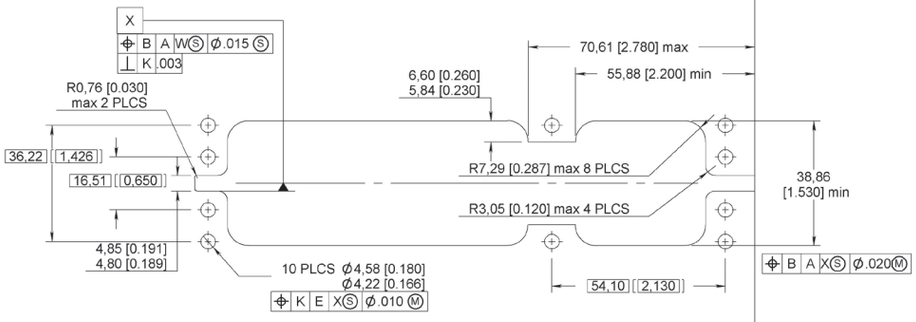

SIZE 1

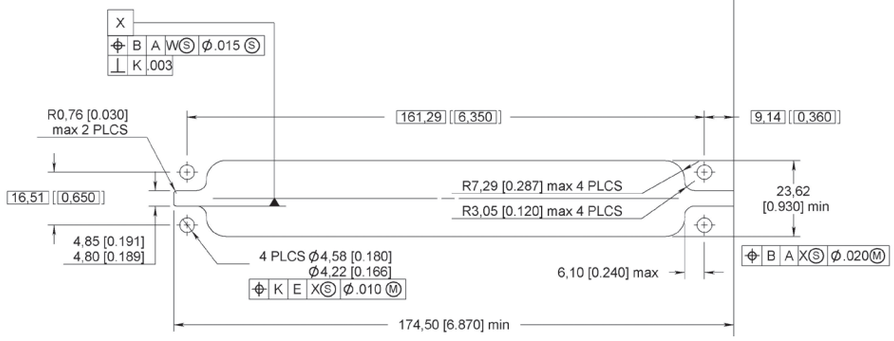

Contacts

TOOLS

CRIMPING TOOLS

PART NUMBER	CRIMPING TOOLS
282291	M22520/1.01
282281	M22520/2.01
282292	M22520/4.01
282293	M22520/5.01
-	M22520/23.01
-	M22520/31.01

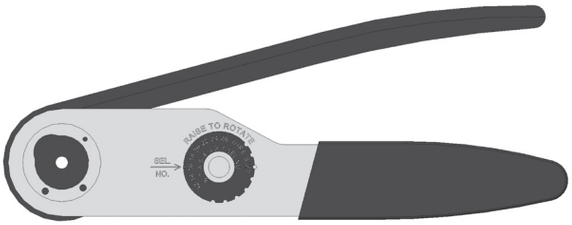

POSITIONERS

PART NUMBER	MIL SPEC P/N
282972	M22520/1.02
282579	M22520/1.11
282997	M22520/1.13
282971	M22520/2.08
282970	M22520/2.23
-	M22520/23.09
282550 (DANIELS K345)	-
282555 (DANIELS K370)	-
282556	-
282587	-
282588	-

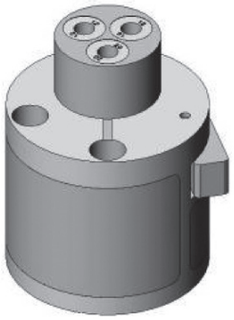

DIES

PART NUMBER	MIL SPEC P/N
282246	M22520/5.05
-	M22520/5.13
-	M22520/5.29
282236	M22520/5.45
282247	M22520/5.61
-	M22520/23.02
-	M22520/5.104

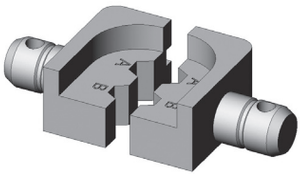

INSERTION/EXTRACTION TOOLS

PART NUMBER	MIL SPEC P/N	DESCRIPTION
282885	M81969/1.01	Ins/Ext Tool for Rear Release Rear Removable Size 22 Contacts (Crimp Version)
282886	M81969/1.02	Ins/Ext Tool for Rear Release Rear Removable Size 20 Contacts (Crimp Version)
282546	M81969/1.03	Ins/Ext Tool for Rear Release Rear Removable Size 16 Contacts (Crimp Version)
282946	M81969/28.01	Ins/Ext Tool for Rear Release Rear Removable Size 5 Coaxial Contacts (Metallic)
282500	-	Ins/Ext Tool for Front Release Front Removable Size 22 Contacts
282503	-	Ins/Ext Tool for Front Release Front Removable Size 20 Contacts
282504	-	Ins/Ext Tool for Front Release Front Removable Size 16 Contacts
282549005	-	Ins/Ext Tool for Front Release Front Removable Size 12 Contacts
282890	-	Ins/Ext Tool for Rear Release Size 22 Contacts Solder Tail and Wire Wrap Terminations
282549011	-	Insertion Tool for Front Release Front Removable Size 8 Triaxial Contacts, Solder Tail Version
282549004	M81969/14.04	Extraction Tool for Rear Release Rear Removable Size 12 Contacts
-	M81969/19.02	Extraction Tool for Front Release Rear Removable Size 12 Power Contacts
-	M81969/19.03	Extraction Tool for Front Release Rear Removable Size 8 Contacts
282549001	M81969/28.03	Extraction Tool for Rear Release Rear Removable Size 8 Contacts
282549004	-	Extraction Tool for Rear Release Rear Removable Size 12 Contacts (Crimp Version)
282548	-	Extraction Tool for Rear Release Rear Removable Size 5 Coaxial Contacts
282549009	-	Extraction Tool for Front Release Front Removable Size 8 Triaxial Contacts
282549012	-	Extraction Tool for Front Release Rear Removable Size 8 Triaxial Contacts
282892	-	Extraction Tool for Rear Release Rear Removable Size 16 Coaxial Contacts
282945	-	Extraction Tool for Rear Release Rear Removable Size 12 Coaxial Contacts
282548	-	Extraction Tool for Rear Release Rear Removable Size 5 Coaxial Contacts (Plastic)

Contacts

ACCESSORIES

EMI BACKSHELLS

Radiall is proud to introduce two ways to integrate EMI backshells on Arinc 600 connectors:

- Backshell adapters plates
- Radiall backshell solution

Backshell adapters plates:
Backshell adapters plates can be delivered with NSX connectors when choosing modification code 60 and 61.

COMBINATION CODE	RECEPTACLE SHELL		PLUG SHELL	
60 [1]	-	-	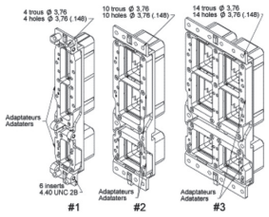	Shell Size 1: Q^{ty} = 4 Holes Ø 3.76 (0.148) & Q^{ty} = 6 4-40 UNC 2B Shell Size 2: Q^{ty} = 10 Holes Ø 3.76 (0.148) Shell Size 3: Q^{ty} = 14 Holes Ø 3.76 (0.148) Delivered with Backshell Adapters Plates
61 [1]	-	-	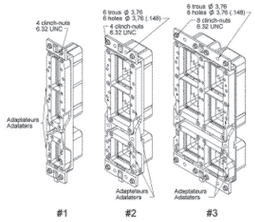	Shell Size 1: Q^{ty} = 4 6-32 UNC Shell Size 2: Q^{ty} = 6 Holes Ø 3.76 (0.148) & Q^{ty} = 4 6-32 UNC Shell Size 3: Q^{ty} = 6 Holes Ø 3.76 (0.148) & Q^{ty} = 8 6-32 UNC Delivered with Backshell Adapters Plates

RADIALL BACKSHELL SOLUTION

- High EMI performances
- Easy installation and maintenance with:
  - Modular backshells (1 or 2 pieces backshells)
  - Captive screws
- Available on size 1, 2 and 3 Arinc 600 connectors
- Round or oblong chimneys

Please, contact Radiall for more information about NSX backshells

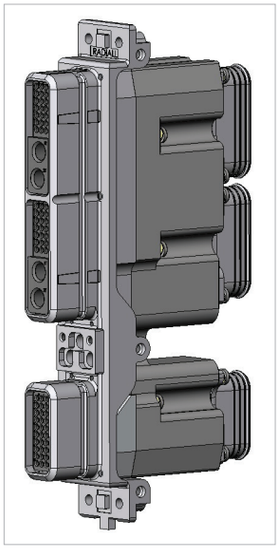

FILLER PLUGS (NON-ENVIRONMENTAL)

SIZE	CONTACT CAVITY VERSION	INS	EXT	COLOR/TYPE	PART NUMBER	DRAWING
22	For Pin & Socket	Rear	Rear	Black	620920	←
	For Socket	Front	Front	Aluminium	620919	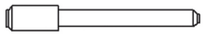 →
	For Socket	Front	Front	White	620926	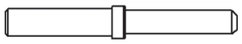 →
20	For Pin & Socket	Rear	Rear	Eed	620921	←
	For Pin & Socket	Front	Front	White	620934001	→
16	For Pin & Socket	Rear	Rear	Blue	620922	←
	For Pin & Socket	Front	Front	White	620935001	→
12	For Pin & Socket	Rear	Rear	Yellow	620923	←
	For Pin	Front	Front	White	620936001	→
	For Pin	Front	Front	Nickel	620936002	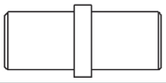 →
8	For Pin	Rear	Rear	Nickel	619953	←
	For Pin	Front	Front	Nickel	619552	→
	For Socket	Rear	Rear	Nickel	619950	← 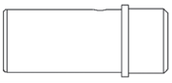
5	For Pin	Rear	Rear	White	620924	← 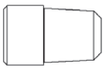
	For Socket	Rear	Rear	White	620925	←
	For Pin & Socket	Front	Front	White	620937001	- 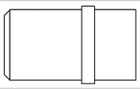 →

Contacts

SEALING PLUGS (ENVIRONMENTAL)

Sealing plugs are dedicated to environmental inserts.

SIZE	CONTACT CAVITY VERSION	INS	EXT	COLOR/TYPE	PART NUMBER	DRAWING
22	For Pin & Socket	Rear	Rear	Black	616910	←
20	For Pin & Socket	Rear	Rear	Red	616911	← 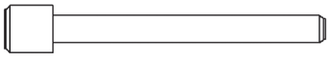
16	For Pin & Socket	Rear	Rear	Green	616912	← 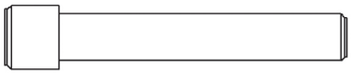
12	For Pin & Socket	Rear	Rear	Orange	616913	← 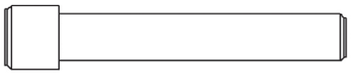
8	For Pin & Socket	Rear	Rear	Red	618915	← 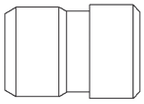
5	For Pin & Socket	Rear	Rear	Red	616914014	← 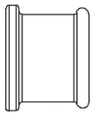

Notes

The arrows show the direction which you have to insert the plug.

Contacts

DUMMY INSERTS

When a cavity shell is not fitted with one of the inserts shown on pages 5-11 to 5-20, the cavity shell is fitted with a dummy insert. Dummy inserts are made of aluminium alloy and are available for each cavity shell nickel or RoHS plating.

SHELL SIZE	CAVITY	DUMMY INSERT P/N	FIGURE
1	A or B	620913001 (Nickel) 620913005 (RoHS)	
	C	620913002 (Nickel) 620913006 (RoHS)	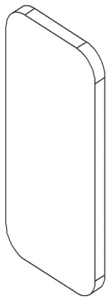
2 & 3	A or B or D or E	620913003 (Nickel) 620913007 (RoHS)	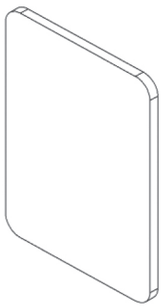
	C or F	620913004 (Nickel) 620913008 (RoHS)	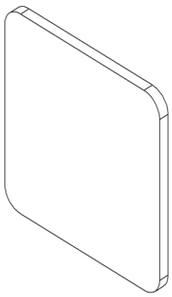

Contacts

DUST CAPS

Dust caps are made of thermoplastic. They are available either conductive (black color) or not (red color).

ELECTRICAL CHARACTERISTICS	SHELL TYPE	SHELL SIZE	SHELL CAVITY	PART NUMBER	FIGURE
Conductive	Plug	1	A/B	620995003	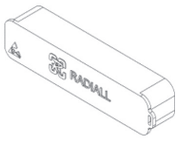
			C	620995004	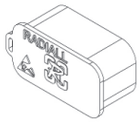
		2 & 3	A/B & D/E	620995007	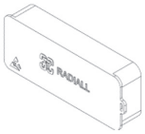
			C & F	620995008	
	Receptacle	1	A/B	620995011	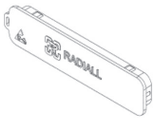
			C	620995012	
		For Single Shell Connector	-	620995018	
		2 & 3	A/B & D/E	620995015	
			C & F	620995016	

Contacts

DUST CAPS

ELECTRICAL CHARACTERISTICS	SHELL TYPE	SHELL SIZE	SHELL CAVITY	PART NUMBER	FIGURE
Non Conductive	Plug	1	A/B	620995001	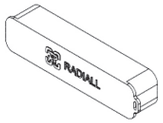
			C	620995002	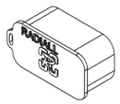
		For Single Shell Connector	-	620995017	
		2 & 3	A/B & D/E	620995005	
			C & F	620995006	
	Receptacle	1	A/B	620995009	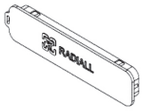
			C	620995010	
		2 & 3	A/B & D/E	620995013	
			C & F	620995014	

Contacts

CAVITY REDUCERS

The following parts are cavity reducers which allows the use of a size 12 contact in a size 5 cavity. These parts are made of copper alloy and are plated with gold over nickel. Once installed, they cannot be removed.

ELECTRICAL CHARACTERISTICS	PART NUMBER	FIGURE
For Pin Contact	620940	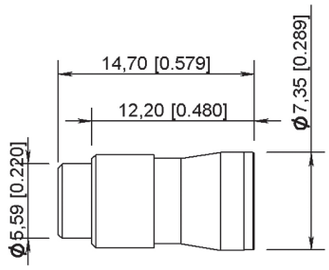
For Socket Contact	620941	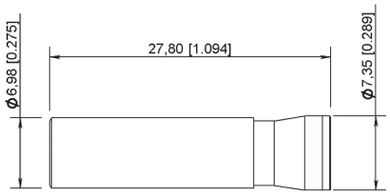
For Pin Contact Front Release / Front Removable (FR/FR) Connector in Version G	620942	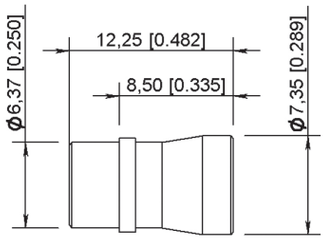

Contacts

SEALING BOOTS

The sealing boots are designed to slide down over the back of the crimped contacts after they have been installed in the connector. The assembly provides bend support and moisture sealing to the contact / cable assembly. Sealing boots are made of fluorosilicon rubber.

ELECTRICAL CHARACTERISTICS	CABLE OUTSIDE DIA. MM (INCH)	CABLE	PART NUMBER	FIGURE
5	5 (0.197)	RG 58 RG 141 RG 142 RG 223 RG 400	620939201	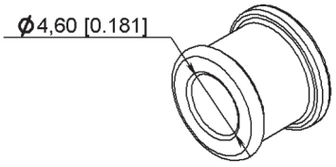
	3.81 (0.150)	RG 180 RG 195	620939200	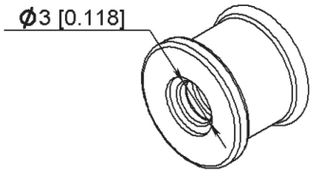
	2.59 (0.102) & 2.01 (0.079)	RG 179 RG 316 KX 21	620914001	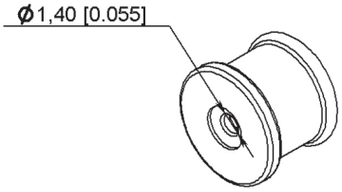

GROUNDING BLOCK (PART NUMBER 620981002)

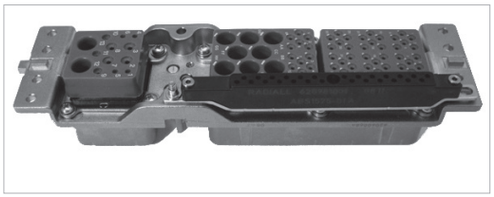

Radiall provides a unique feature by integrating a ground block directly on the plug shell for sizes #2 & #3.

This option allows very short ground terminations.

Pin crimp ground contacts are available with grounding block, part number is 620260 (up to 26 contacts per grounding block).

ALIGNMENT BOOTS (PART NUMBER 619960)

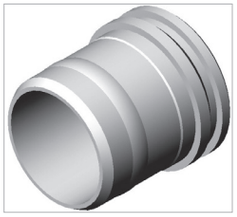

Alignment boots are designed to reduce the play at the top of the size 8 pin contacts. They are used with non-environmental rear release/rear removable size 8 pin contacts.

NSX–Single Shell Connector

INTRODUCTION

NSX single shell connectors are designed to accommodate all large cavity inserts. Their characteristics are shown on page 5-5 except for the following.

MATERIALS

DESCRIPTION	MATERIAL	PLATING
Shell	Aluminum Alloy	Cadmium Clear Chromate or Nickel
Insert Retention Plate	Aluminum Alloy	Cadmium Clear Chromate or Nickel
Polarization Posts and Keys Retention Plate	Aluminum Alloy	Cadmium Clear Chromate or Nickel
Screws Washers and Clinch-Nuts	Stainless Steel	-
	Steel	Cadmium Clear Chromate
Polarization Posts and Keys	Zinc Alloy	Cadmium Yellow Chromate or Nickel

NSX–Single Shell Connector

HOW TO ORDER NSX–SINGLE SHELL CONNECTOR

NSX

SERIES PREFIX

CLASS

N: Non-environmental (rear removable version only)
E: Environmental, with grommets and compound; plug with O-ring (rear removable version only).
H: Environmental plug without O-ring
C: Non-environmental with grommets
Front Removeable
F: Non-environmental receptacle shell
G: Non-environmental receptacle shell
Rear Removeable

SHELL STYLE

R: Cadmium clear chromate plated receptacle
P: Cadmium clear chromate plated plug
F: Nickel plated receptacle
B: Nickel plated plug
M: Nickel plated plug EMI/RF1 solution (see page 5-95)

CONTACT ARRANGEMENT

See contact arrangements on pages 5-11 to 5-20.
Only use insert for A & B cavities.

CONTACT TERMINATION [1]

WITHOUT CONTACTS
X: Without contacts
S: Crimp contacts

WIRE WRAP
K: Wire wrap contact, 1 level (1 = 0.272)
V: Wire wrap contact, 2 levels (1 = 0.390)
W: Wire wrap contact, 3 levels (1 = 0.524)

PC TAIL CONTACTS

ROHS	GOLD	PRE-TINNED	LENGTH (IN.)
RA	YA	ZA	0.150
R	Y	Z	0.250
RB	YB	ZB	0.375
RC	YC	ZC	0.500

MODIFICATION CODE

00: 4 mounting holes 0.146/0.156 dia
01: 4 clinch nuts 4.40 UNC
03: 4 each 0.122 dia mounting holes c'sunk 0.230 dia × 100°
04: 4 each 0.122 dia mounting holes c'sunk 0.230 dia × 82°
05: 4 each 0.137 dia mounting holes c'sunk 0.230 dia × 82°
23: 4 floating eyelets 0.122 - 0.126 dia

POLARIZATION CODE [2]

See pages 5-91 to 5-92.
Without code: polarization hardware is delivered unassembled.

Notes

1. *For F class receptacle, only size 22 contacts can be delivered in PC Tail version, others contacts (size 20, 16, 12) will be delivered in crimp version. Coaxial, twinax and quadrax contacts are ordered separately.*
   For G class receptacle, every contacts can be delivered in PC Tail or crimp version except size 1 that will be delivered in crimp version only. Coax twinax and power contacts size are ordered separately.
2. *Without polarization code, the connector is delivered polarization hardware unassembled.*
   Polarization code 00, the connector is delivered without polarization hardware.
   Polarization code 01 to 36, the connector is delivered with the polarization hardware assembled as defined by the code.

NSX–Single Shell Connector

INSTALLATION

HORIZONTAL

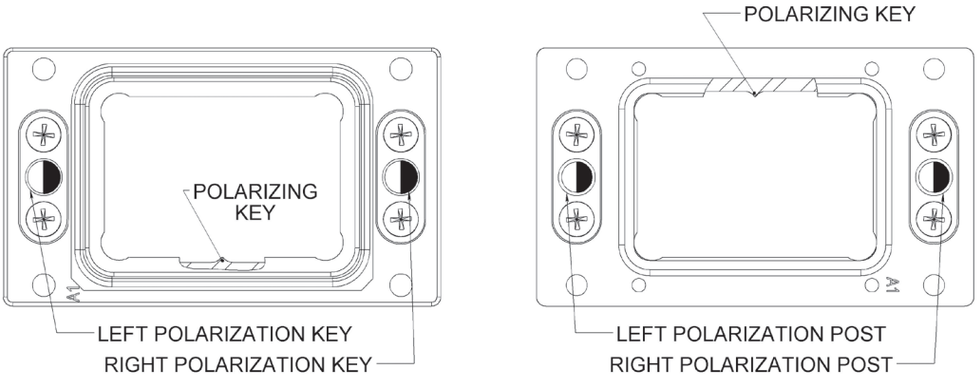

MATING FACE

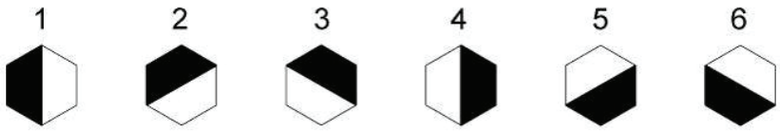

POSITION OF POST (DARK) AND KEYHOLE (LIGHT)

POSITION	EQUIPMENT RECEPTACLE		RACK PLUG	
	LEFT. KEY	RIGHT. KEY	LEFT. POST	RIGHT. POST
01 02	1 3	1 4	1 4	1 5
03 04	2 1	4 4	4 4	6 1
05 06	6 5	4 4	4 4	2 3
07 08	4 3	5 5	3 3	4 5
09 10	2 1	5 5	3 3	6 1
11 12	6 5	5 5	3 3	2 3
13 14	4 3	6 6	2 2	4 5
15 16	2 1	6 6	2 2	6 1
17 18	6 5	6 6	2 2	2 3
19 20	4 3	1 1	1 1	4 5
21 22	2 4	1 4	1 4	6 4
23 24	6 5	1 1	1 1	2 3
25 26	4 3	2 2	6 6	4 5
27 28	2 1	2 2	6 6	6 1
29 30	6 5	2 2	6 6	2 3
31 32	4 3	3 3	5 5	4 5
33 34	2 1	3 3	5 5	6 1
35 36	6 5	3 3	5 5	2 3

NSX–Single Shell Connector

VERTICAL

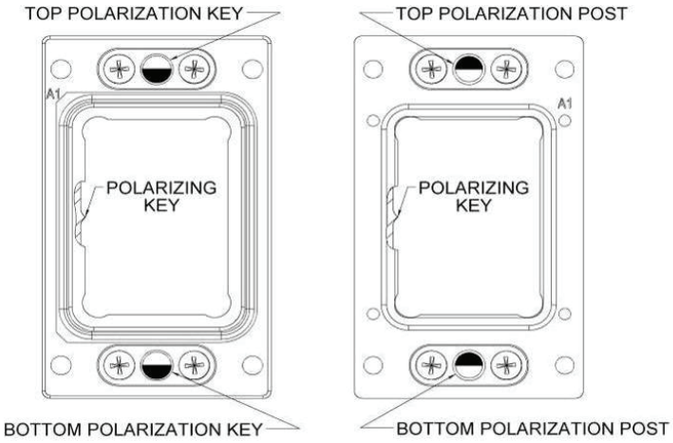

MATING FACE

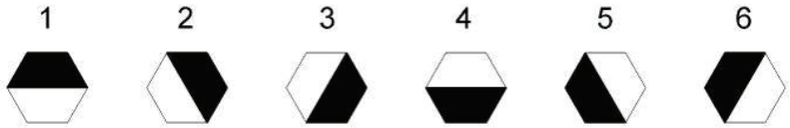

POSITION OF POST (DARK) AND KEYHOLE (LIGHT)

POSITION	EQUIPMENT RECEPTACLE		RACK PLUG	
	LEFT. KEY	RIGHT. KEY	LEFT. POST	RIGHT. POST
01 02	1 3	1 4	4 2	4 1
03 04	2 1	4 4	3 4	1 1
05 06	6 5	4 4	5 6	1 1
07 08	4 3	5 5	1 2	6 6
09 10	2 1	5 5	3 4	6 6
11 12	6 5	5 5	5 6	6 6
13 14	4 3	6 6	1 2	5 5
15 16	2 1	6 6	3 4	5 5
17 18	6 5	6 6	5 6	5 5
19 20	4 3	1 1	1 2	4 4
21 22	2 4	1 4	3 1	4 1
23 24	6 5	1 1	5 6	4 4
25 26	4 3	2 2	1 2	3 3
27 28	2 1	2 2	3 4	3 3
29 30	6 5	2 2	5 6	3 3
31 32	4 3	3 3	1 2	2 2
33 34	2 1	3 3	3 4	2 2
35 36	6 5	3 3	5 6	2 2

NSX–Single Shell Connector

DIMENSIONS

NSX SINGLE SHELL RECEPTACLE DIMENSIONS

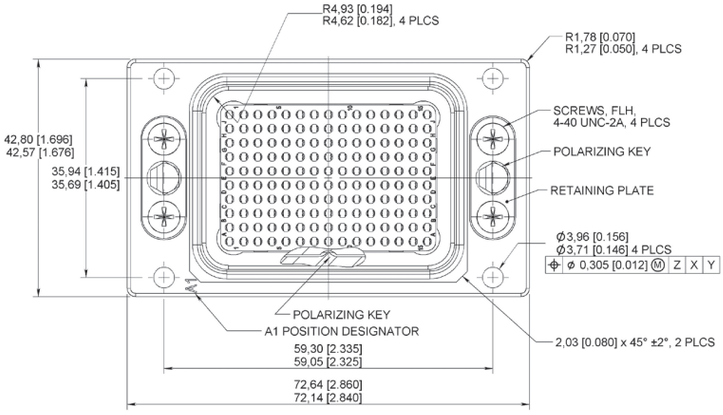

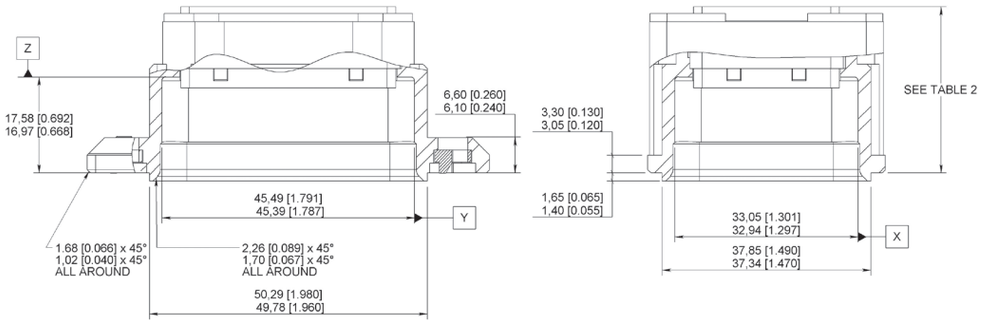

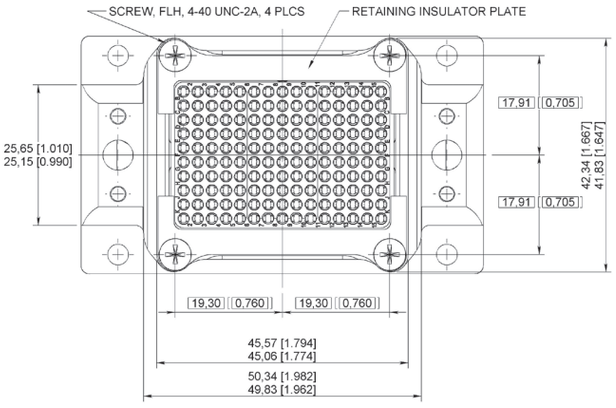

NSX–Single Shell Connector

NSX SINGLE SHELL PLUG DIMENSIONS

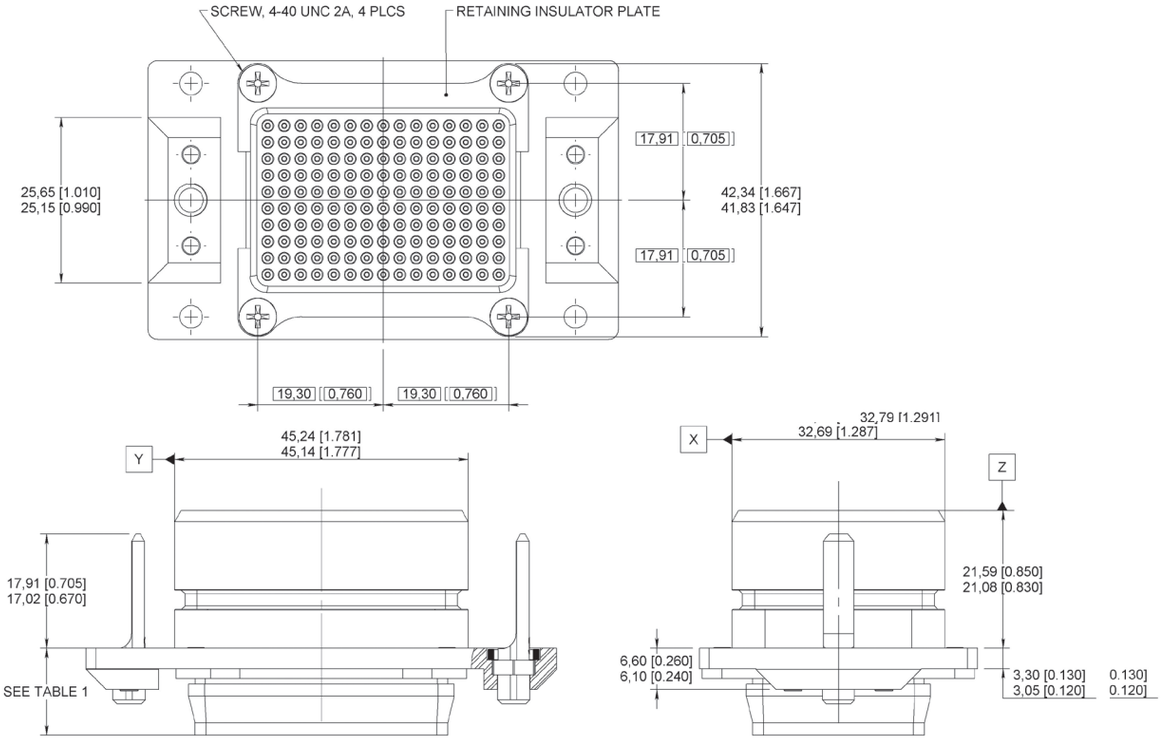

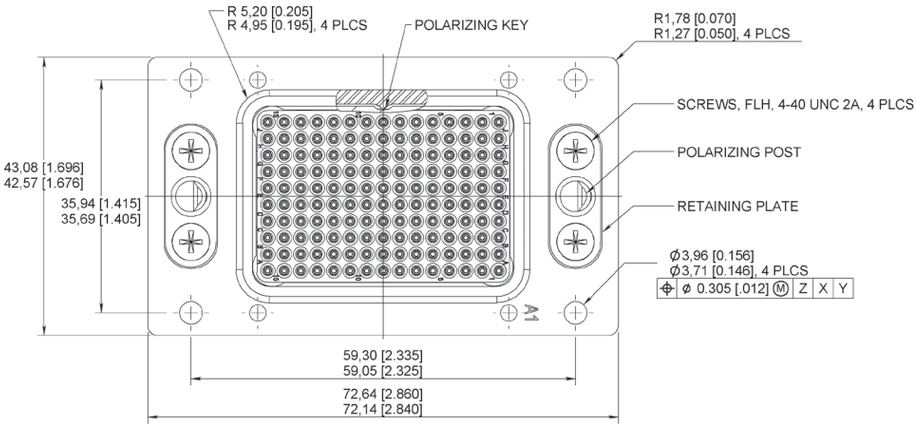

NSX–Single Shell Connector

NSX SINGLE SHELL PANEL CUT-OUT

RECEPTACLE

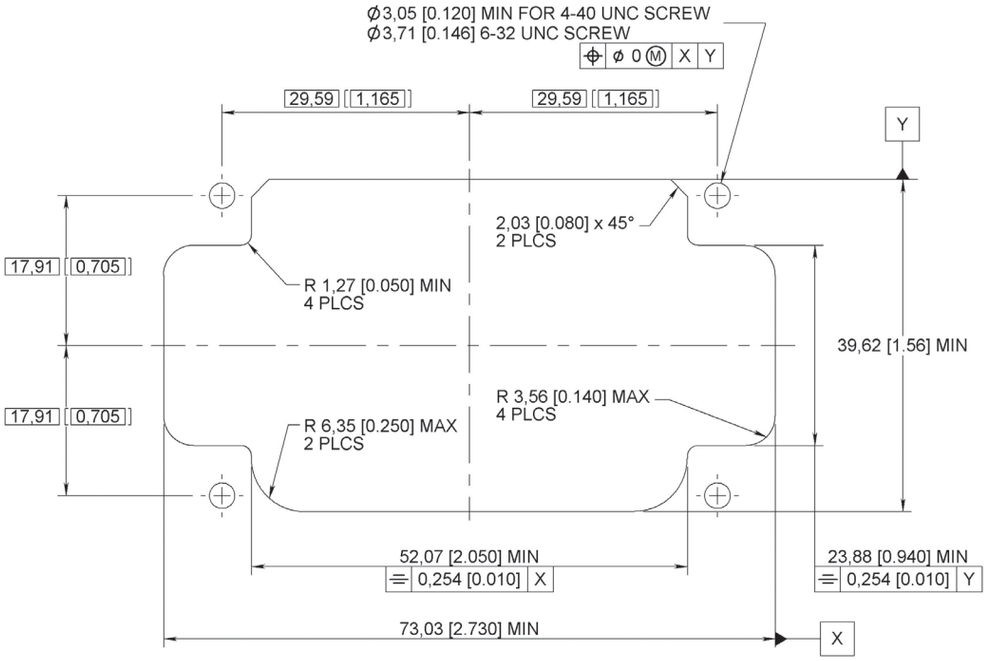

PLUG

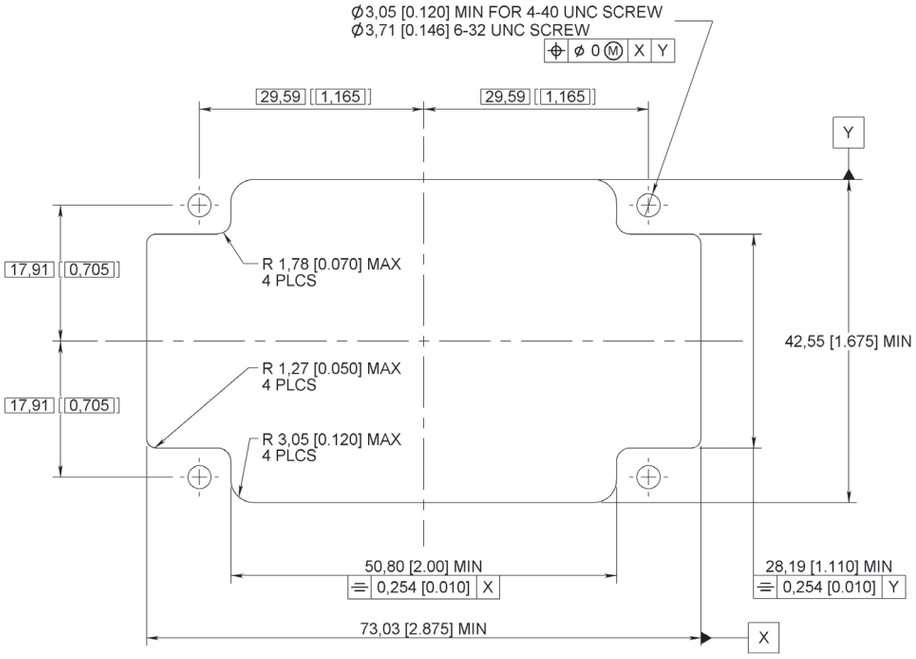

NSX–Single Shell Connector

EMI/RFI NSX SINGLE SHELL PLUG DIMENSIONS

How to Order - See Page 5-90

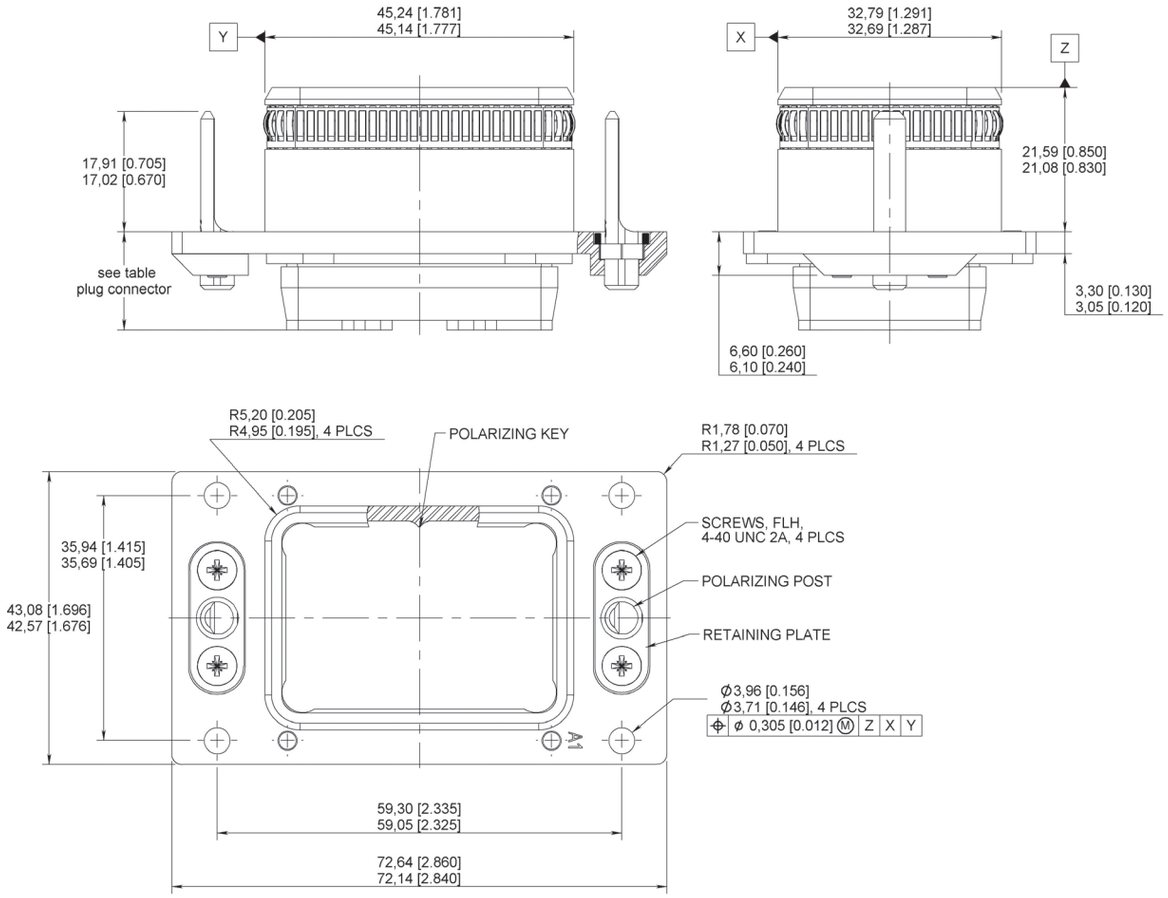

BPX

INTRODUCTION

BPX series connectors are EMI shielded and modular insert concept rectangular multipin connectors fitted with NSX inserts and contacts.

BPX connectors are differentiated from NSX connectors by their shell sizes available: 1, 2 and 3.

The BPX characteristics are compliant to BOEING S280W551 specification. Their specific characteristics (those which are different from NSX connectors) are as follows:

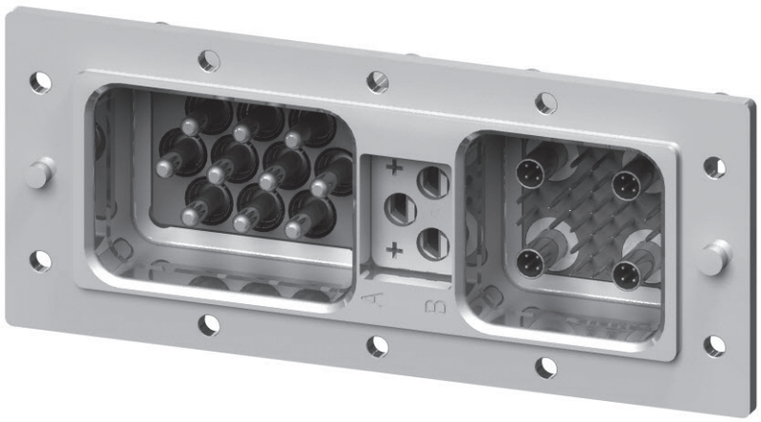

CHARACTERISTICS

ELECTRICAL

BPX electrical characteristics are the same as NSX connectors (see pages 5-5 to 5-7) except the following:

- **Magnetic Permeability:** 2.0 Ohms max

BPX

MECHANICAL & ENVIRONMENTAL CHARACTERISTICS

Identical to NSX connectors except the following:

- **Mating and Unmating Forces:**
  - Shell size 1: 70 lb (311 N) max
  - Shell size 2: 140 lb (623 N) max
  - Shell size 3: 130 lb (578 N) max
- **Humidity:** Type II (measured according to method 1002 of MIL-STD-1344A)
- **Fluid Resistance:** Resistance to MIL-STD-1344A method 1016 (fluids a, e, i, j).
- **Contact Stability:** Conforming to S280W551 requirements.

MATERIALS

DESCRIPTION	MATERIAL	PLATING
Shell	Aluminum Alloy	Electrically Conductive Finish Over Nickel
Grounding Spring Fingers	Copper Alloy	Nickel
Insert Retention Plate	Aluminum Alloy	Nickel
Polarization Posts and Keys Retention Plate	Aluminum Alloy	Nickel
Screws, Washers and Clinch Nuts	Stainless Steel	-
Polarization Posts and Keys	Zinc Alloy	Nickel

BPX

HOW TO ORDER CONNECTOR

BPX N/E/F/G CONNECTORS FOR REAR REMOVABLE CONTACTS

BPX

SERIES PREFIX

CLASS
N: Non environmenta
E: Environmental
F: Non-environmental receptacle connectors only for F class receptacle, only size 22 contacts can be delivered in PC Tail version, others contacts (size 20, 16, 12) will be delivered in crimp version. Coaxial, twinax and quadrax contacts shall to be ordered separately.
G: Non-environmental receptacle connectors only for G class receptacle, every contacts can be delivered in PC Tail or crim version except size 1 that will be delivered in crimp version only. Coax, twinax and power contacts size shall be ordered separately.

SHELL SIZE
1: 2 cavities
2: 4 cavities
3: 5 cavities

SHELL STYLE
R: Receptacle
P: Plug

INSERT COMBINATION CODE
See insert combination codes on page 5-100

CONTACT TERMINATION [1]

WITHOUT CONTACTS
X: Without contacts
S: Crimp contacts

WIRE WRAP
K: Wire wrap contact, 1 level (1 = 0.272)
V: Wire wrap contact, 2 levels (1 = 0.390)

PC TAIL CONTACTS

ROHS	GOLD	PRE-TINNED	LENGTH (IN.)
RA	YA	ZA	0.150
R	Y	Z	0.250

MODIFICATION CODE
00: 4 mounting holes 0.146/0.156 dia

POLARIZATION CODE [1]
See pages 5-31 to 5-33.
Without code: polarization hardware is delivered unassembled.

Notes
1. Polarization code 00, the connector is delivered without polarization hardware. Polarization code 01 to 216, the connector is delivered with the polarization hardware as defined by the code.

BPX

INSERT COMBINATION CODE IN THE SHELL

CODE	INSERT COMBINATION ON SHELL				
	A	B	C	D	E
101	10T10	34	-	-	-
102	10T10	59	-	-	-
103	150	13C2	-	-	-
201	150	100	150	6T6	-
202	121	6T6	150	6T6	-
203	10T10	100	10T10	100	-
204	121	6T6	121	6T6	-
205	110	6T6	150	6T6	-
301	10T10	4	6P6	60A	4
302	10T10	30T2	6P6	60A	30T2
303	120T2	4	6P6	60A	4

CONTACT

BPX connectors use NSX signal, power coaxial and concentric twinax contacts (see pages 5-34 to 5-57).

ACCESSORIES

SEALING BOOT

The sealing boots are designed to slide down over the back of crimped contacts after they have been installed in the connector. The assembly provides bend support and moisture sealing to the contact/cable assembly. For BPX connectors size, 8 coaxial and concentric twinax contacts must be fitted with the sealing boot required by S280W552 specification.

	WIRE DIA MM (INCH)	WIRE TYPE	PART NUMBER	FIGURE
SEALING BOOT FOR CAVITY INSERT SIZE 8	3.68 (0.145)	Tensolite (S280W502-1)	619960005	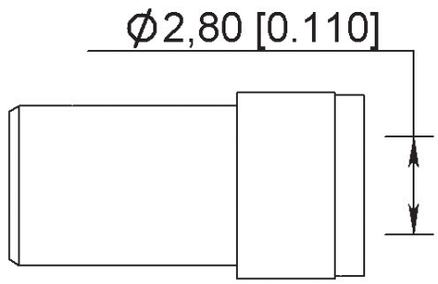

BPX

DUST CAPS

Dust caps are made of thermoplastic material, they are either conductive (black color) or non-conductive (red color).

TYPE	SHELL TYPE	SHELL SIZE	CAVITY	PART NUMBER	FIGURE
Conductive	Plug	1	A and B	618953002	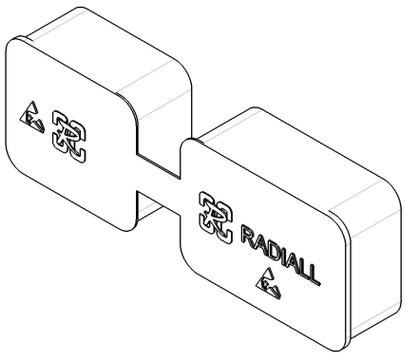
		2	A and B C and D		
		3	A, D	620995007	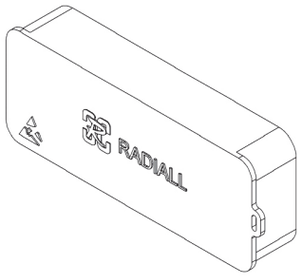
			B, E	620995004	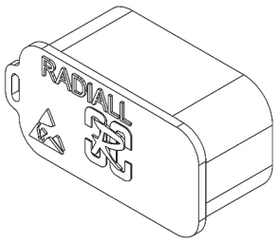
			C	620995008	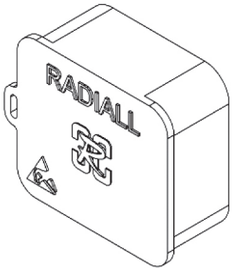

BPX

DUST CAPS

TYPE	SHELL TYPE	SHELL SIZE	CAVITY	PART NUMBER	FIGURE
Conductive	Receptacle	1	A and B	618953001	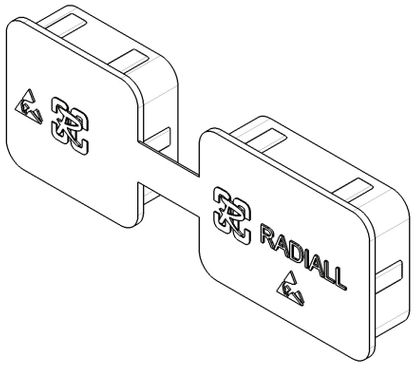
		2	A and B C and D		
		3	A, D	620995018	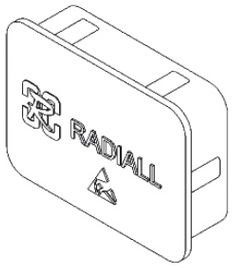
			B, E	620995012	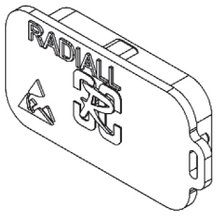
			C	620995016	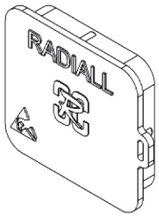

BPX

DUST CAPS

TYPE	SHELL TYPE	SHELL SIZE	CAVITY	PART NUMBER	FIGURE
Non Conductive	Plug	1	A and B	618953	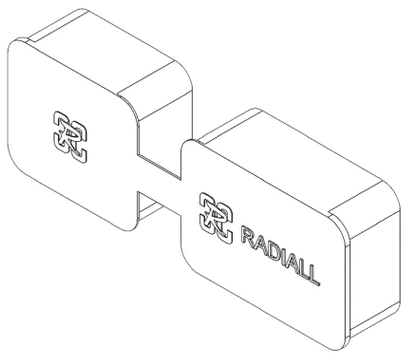
		2	A and B C and D		
		3	A, D	620995017	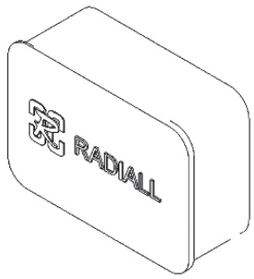
			B, E	620995002	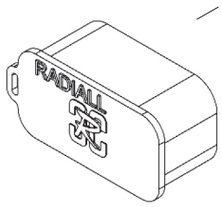
			C	620995006	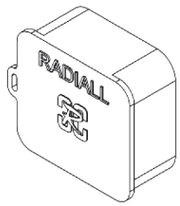

BPX

DIMENSIONS

SIZE 1 PLUG DIMENSIONS

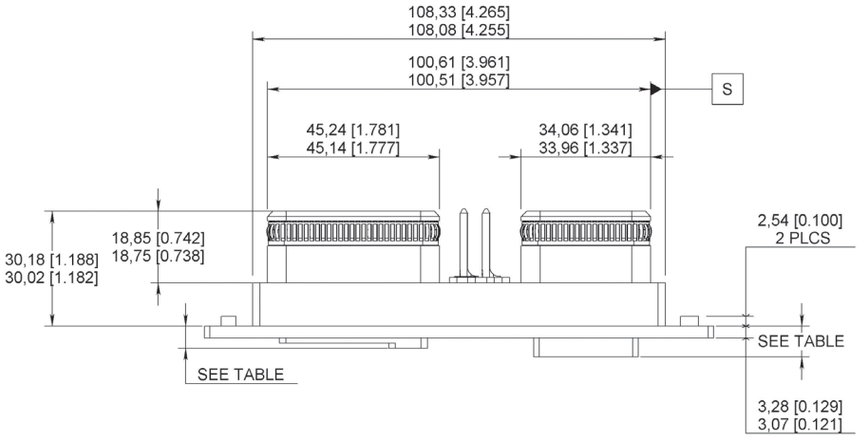

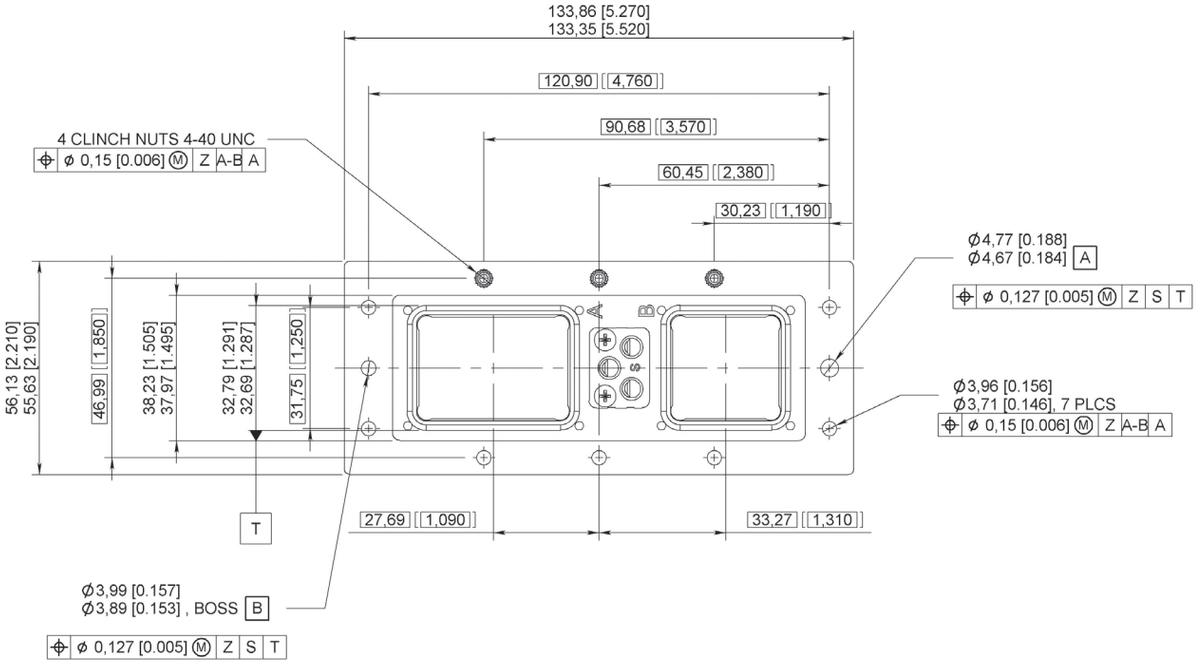

BPX

SIZE 2 PLUG DIMENSIONS

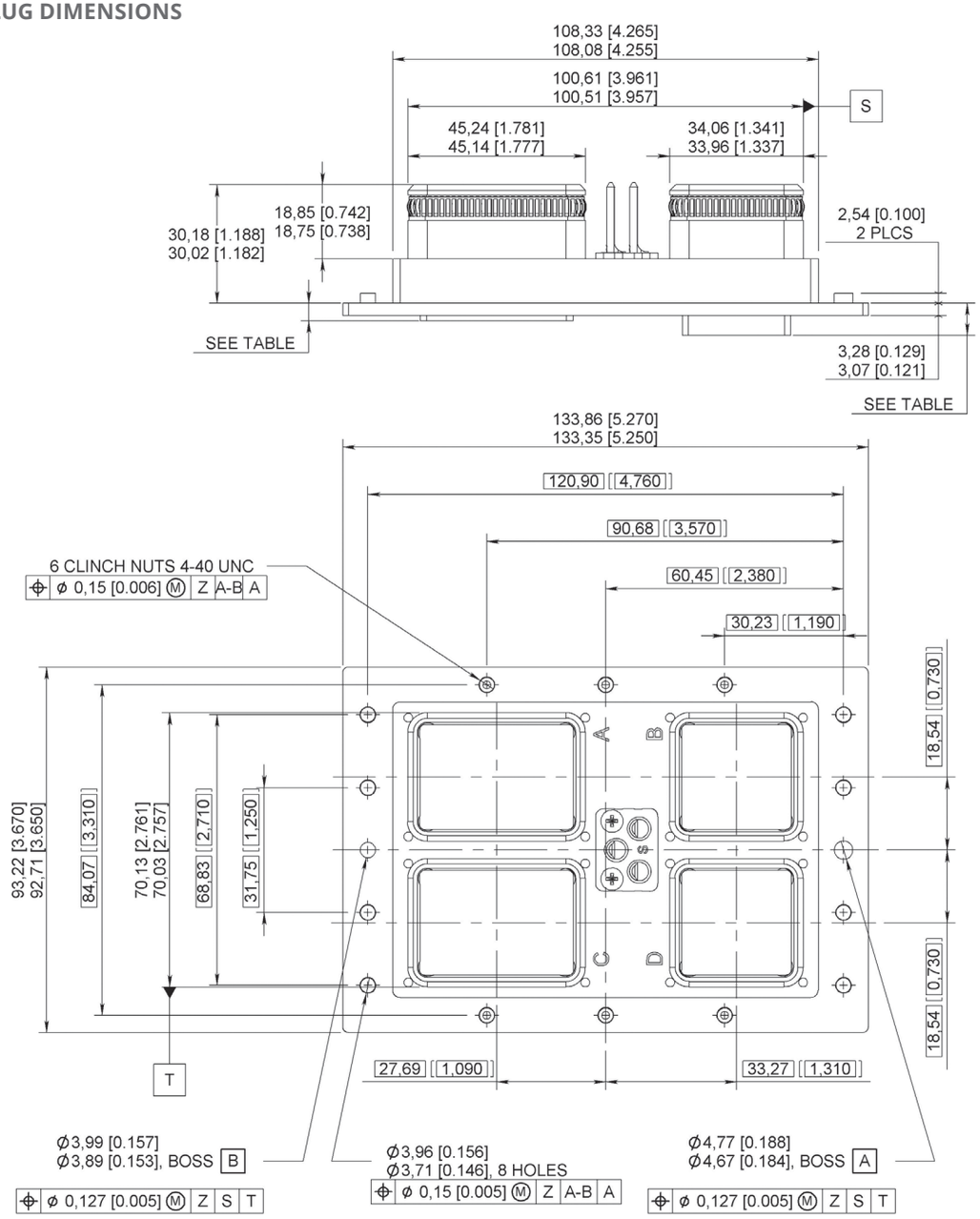

BPX

SIZE 3 PLUG DIMENSIONS

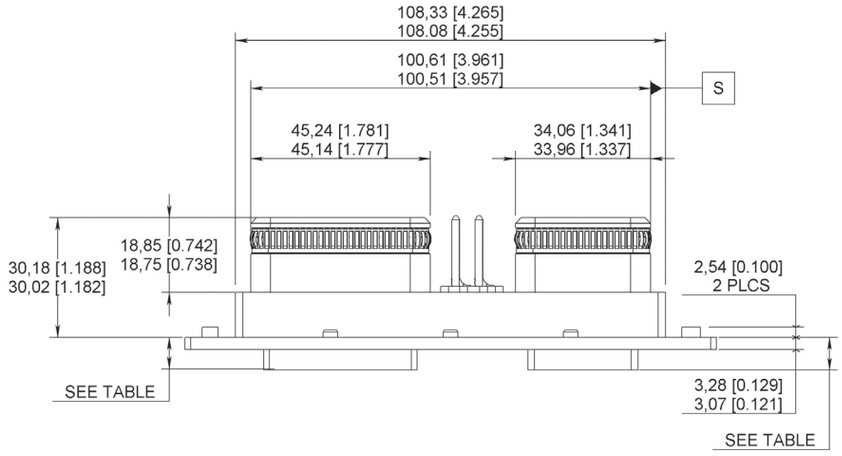

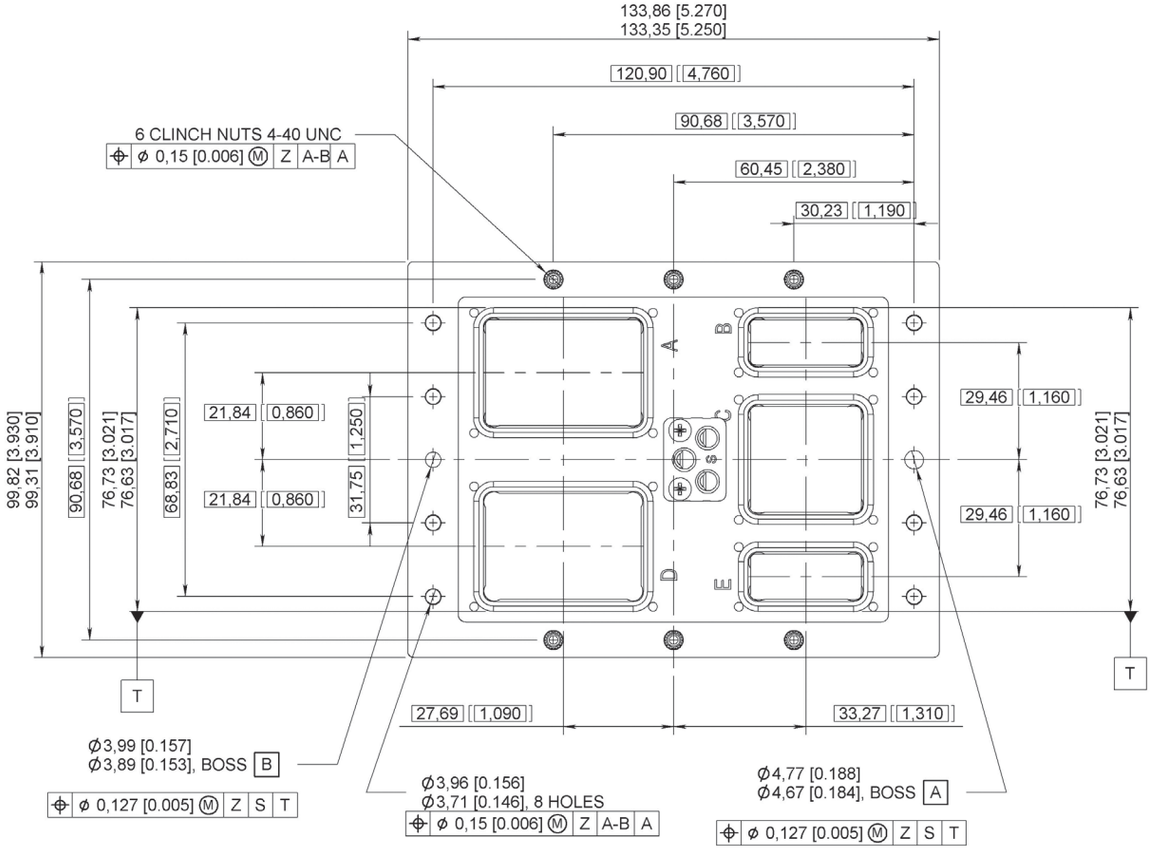

BPX

SIZE 1 RECEPTACLE DIMENSIONS

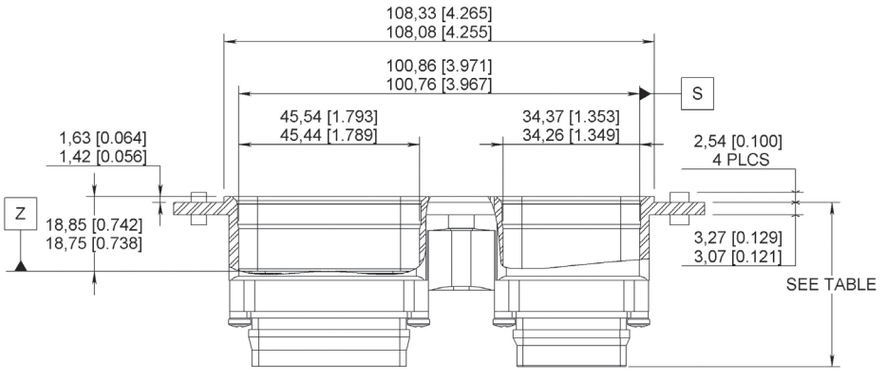

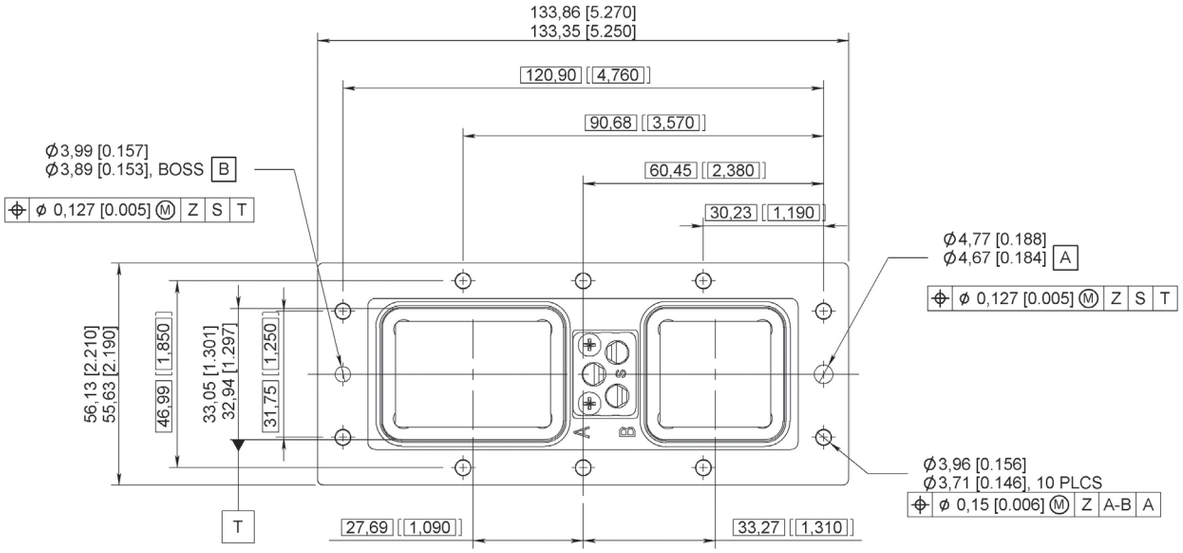

BPX

SIZE 2 RECEPTACLE DIMENSIONS

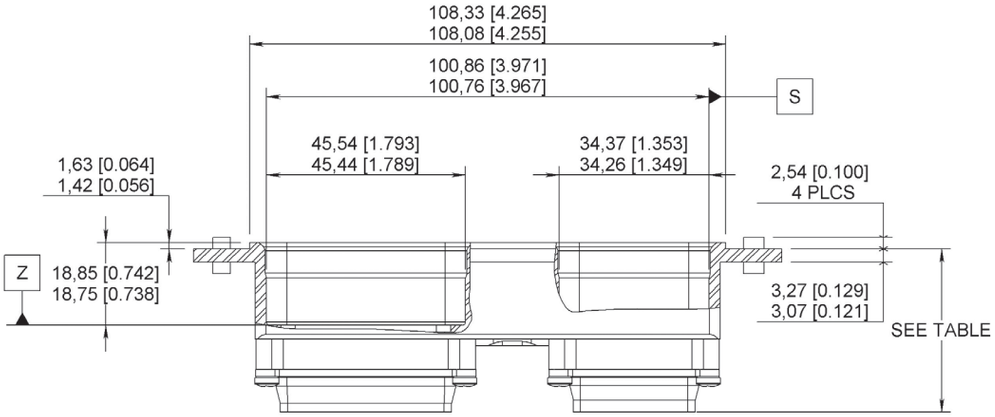

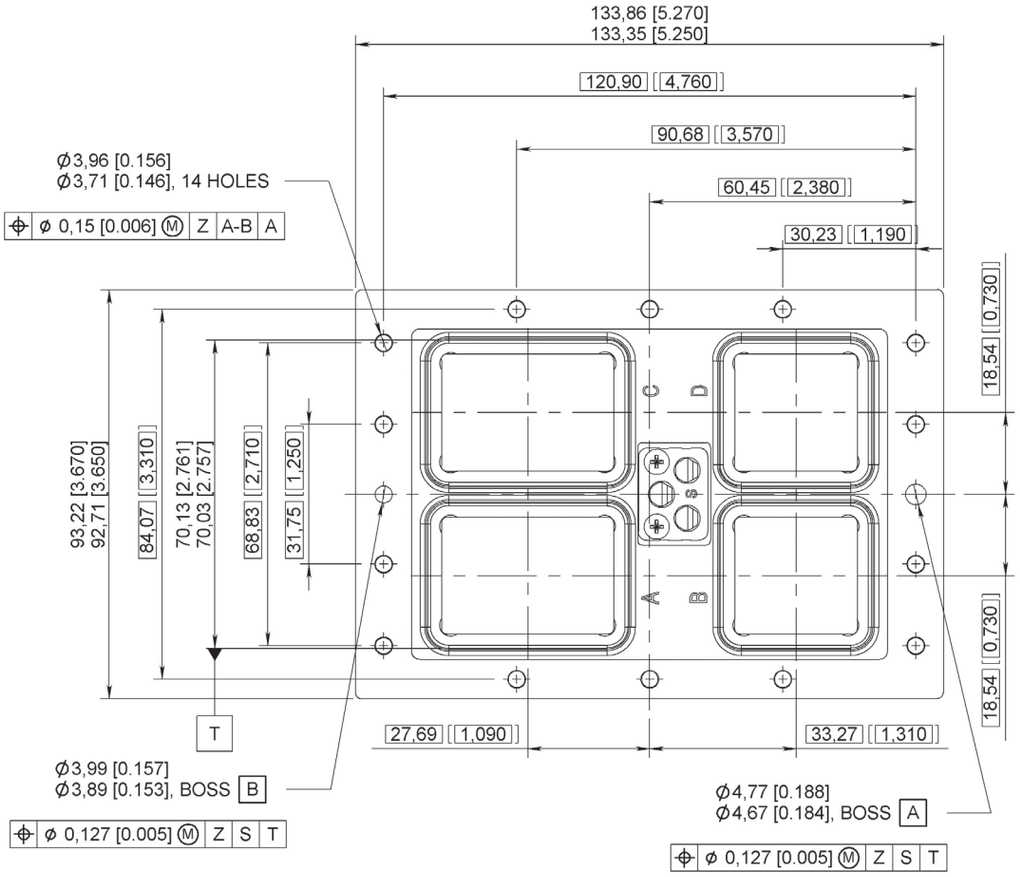

BPX

SIZE 3 RECEPTACLE DIMENSIONS

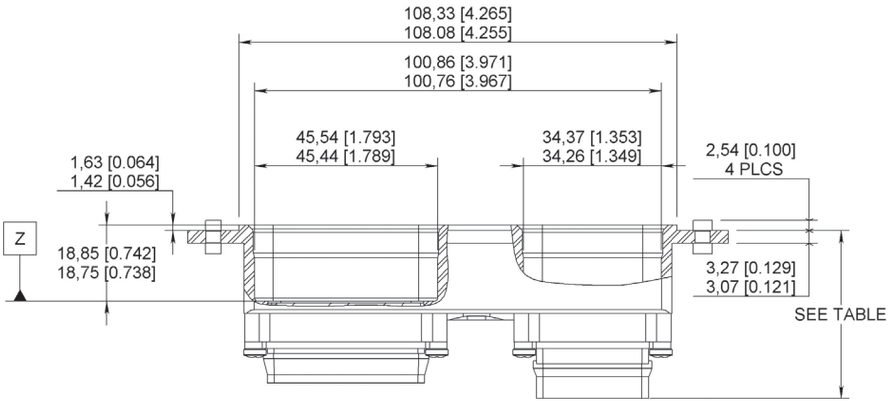

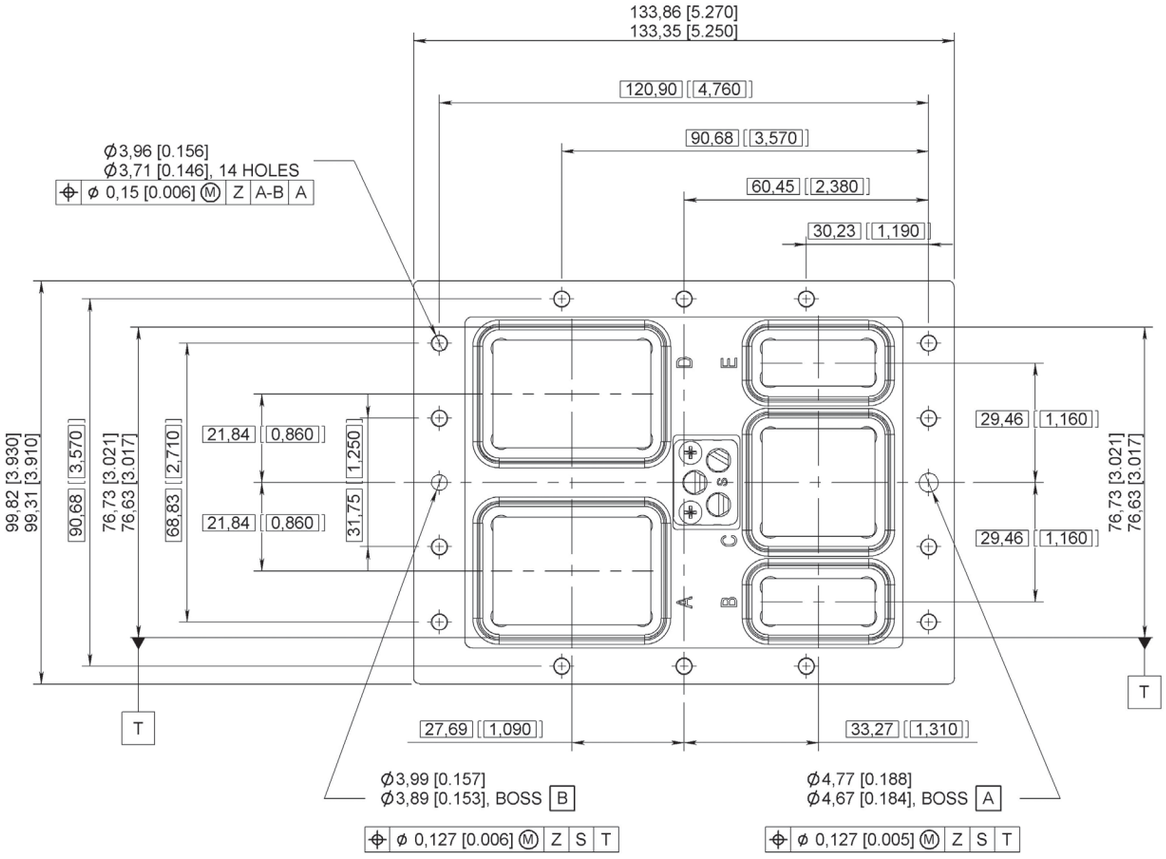

BPX

PANEL CUT-OUT

FOR PLUG

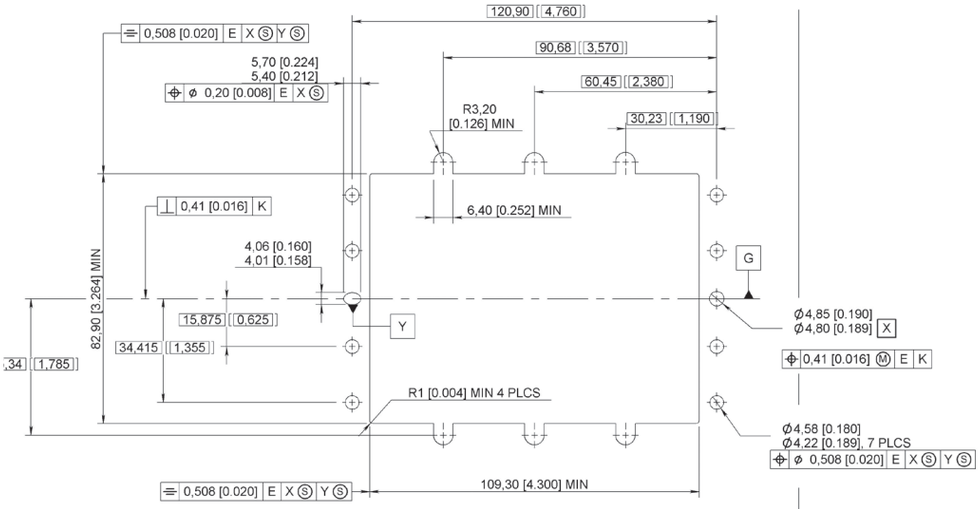

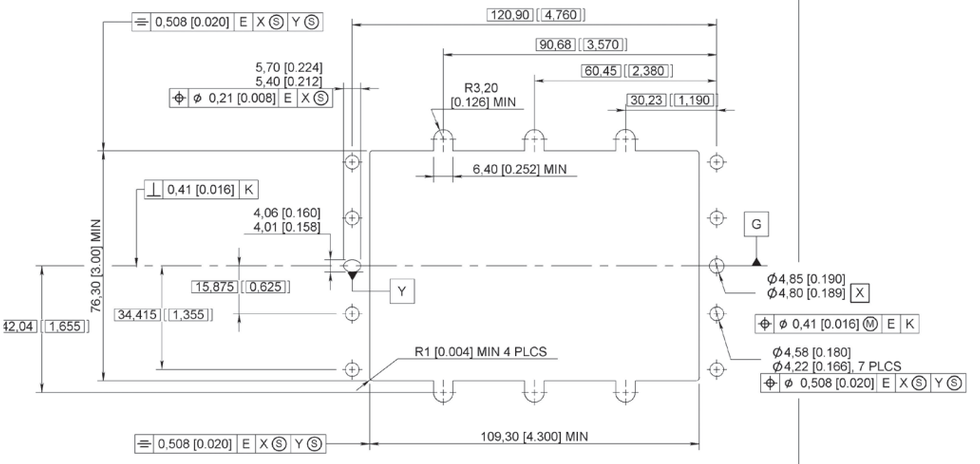

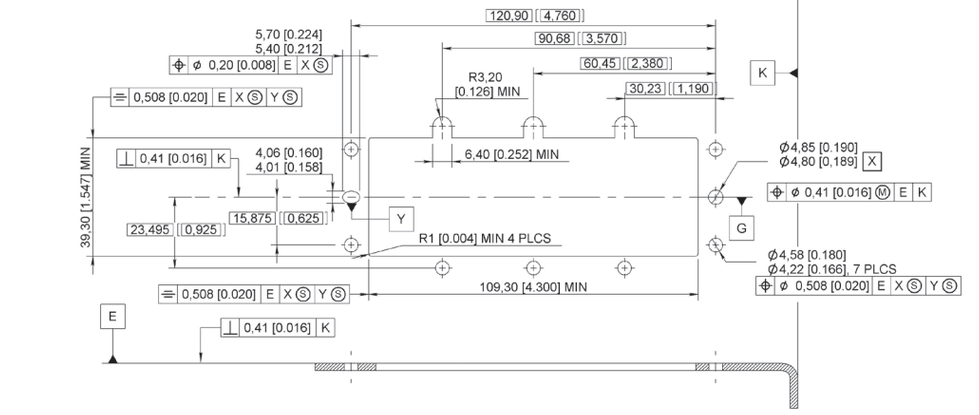

BPX

FOR RECEPTACLE

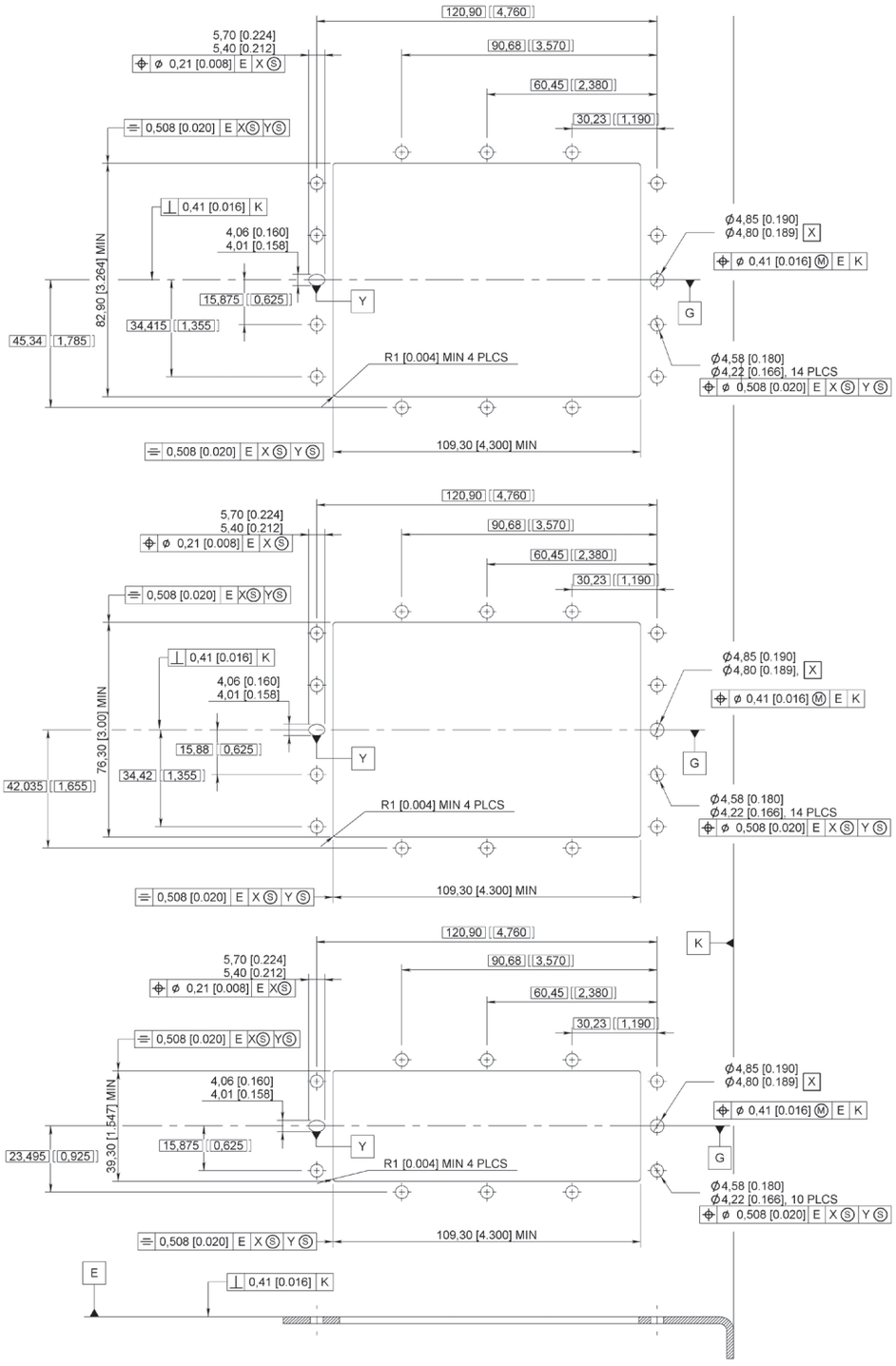

Notes

MPX SERIES

MIL-DTL-83527B, AECMA EN3682

Section 6 Table of Contents

INTRODUCTION

Introduction 6-2
Applications 6-2
Product Overview 6-3
Technical Characteristics ..... 6-4 to 6-5
Shell Ordering Information 6-6
Insert Ordering Information ..... 6-7 to 6-8
Insert Combination Code ..... 6-9 to 6-11
Insert Layouts Cavities A, C or E ..... 6-12 to 6-15
Insert Layouts Cavities B, D or F ..... 6-16 to 6-18
Modification Code 6-19
Polarization Code ..... 6-20 to 6-21
Contacts ..... 6-22 to 6-31
Accessories ..... 6-32 to 6-33

DIMENSIONS

Plug & Receptacle Overview 6-34
Shell 2 Dimensions ..... 6-35 to 6-36
Shell 3 Dimensions ..... 6-37 to 6-38
Shell 4 Dimensions ..... 6-39 to 6-40
Panel Cut-Out ..... 6-41 to 6-42

INTRODUCTION

The Radiall MPX series is a robust rectangular connector designed to meet all the requirements of the MIL-DTL-83527B specification. The design conforms to the EN 3682 European Standard as well. This series is well suited for military and commercial aircraft applications where harsh environmental issues are a concern. Connectors, shells, inserts termination modules and contacts are sold separately or fully assembled.

APPLICATIONS

These connectors are used to form the mechanical and electrical interface between the avionics equipment box and the rack.

© Eurocopter–Jérome Deulin

© Dassault Aviation–F. Robineau

© Eurocopter-Remy Michelin

Introduction

PRODUCT OVERVIEW

Detailed view of the various parts of an MPX connector:

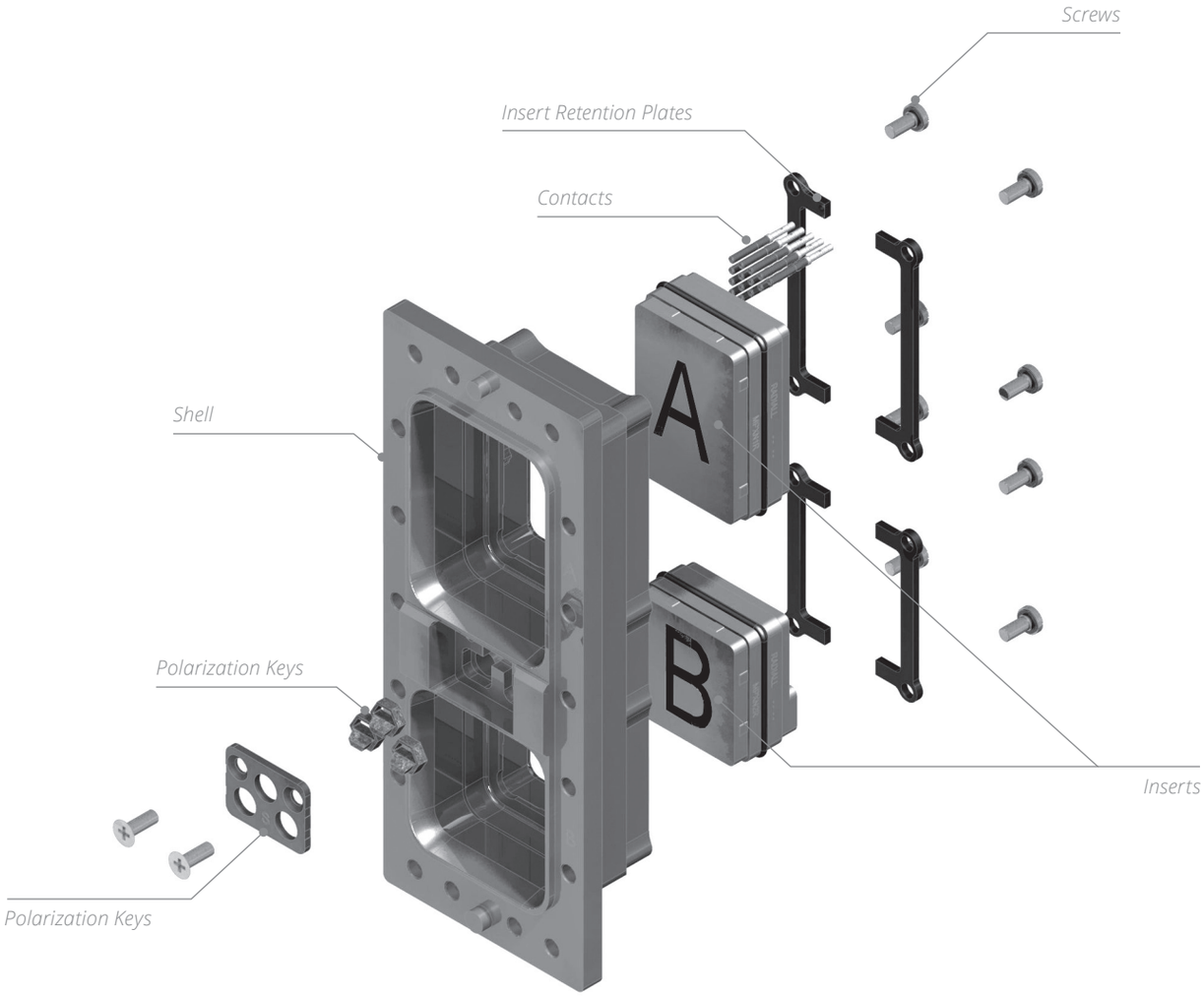

Introduction

TECHNICAL CHARACTERISTICS

ELECTRICAL

- **Insulation Resistance (Test Procedure 21 of EIA364):** ≥ 1,000 MΩ-500 Vdc
- **Shell-to-Shell Conductivity (Test Procedure 83 of EIA364):** ≤ 2.5 m Ohms
- **Size 8 Grounding (Test Procedure 83 of EIA364):** ≤ 10 m Ohms

DIELECTRIC WITHSTANDING VOLTAGE

(Test Procedure 20 of EIA364): Vrms

CONTACT SIZES	AT SEA LEVEL	ALTITUDE (1.1 K PA)
# 22	1,300	800
Other Contacts	1,500	800

EMI SHIELDING EFFECTIVENESS

(MIL-DTL-83527B)

FREQUENCY (Mhz)	ATTENUATION (dB)
100	65
200	65
300	63
400	62
800	60
1,000	60

CONTACTS RESISTANCE

(Test Procedure 23 and 06 of EIA364)

CONTACT SIZE	WIRE				MAX CURRENT (A)	CONTACT RESISTANCE (MΩ)
	AWG	CROSS SECTION (MM2)	MIN DIAMETER INCH (MM)	MAX DIAMETER INCH (MM)		
22	22	0.38	0.030 (0.76)	0.052 (1.32)	5	17
	24	0.21			3	23
	26	0.14			2	38
20	20	0.60	0.035 (0.89)	0.060 (1.52)	7.5	11
	22	0.38			5	17
	24	0.21			3	23
16	16	1.34	0.048 (1.21)	0.080 (2.03)	13	6
	18	0.91			10	8
	20	0.60			7.5	10
12	12	3.18	0.091 (4.85)	0.216 (5.49)	23	3.35
	14	1.91			17	4.24

MECHANICAL & ENVIRONMENTAL

- **Altitude Immersion Test:** 75k Feet / 33 HPa EIA364-03 & EN2491-314
- **Temperature Range:** -65 °C (-85 °F) to +150 °C (+302 °F)
- **Temperature Life (see MIL-DTL-83527B):** 1,000 Hours at 150 °C (+302 °F)
- **Salt Spray (Test Procedure 26 of EIA364):** 500 Hours
- **Humidity (Test Procedure 31 of EIA364):** 10 Days
- **Shock (Test Procedure 27 of EIA364):** 30g/11 ms/Half Sine
- **Vibration:** See MIL-DTL-83527B
- **Mating and Unmating (Test Procedure 9 of EIA364):** 500 Cycles
- **Mating and Unmating Forces:** Shell Size 2 1446 N/325 lbf max
  - Shell Size 3: 1780 N/400 lbf max
  - Shell Size 4: 2113 N/475 lbf max

Introduction

MATERIALS

DESCRIPTION	MATERIAL	FINISH
Shell & Backshell	Aluminium Alloy	Cadmium Yellow Chromate Over Electroless Nickel
Contacts	Copper Alloy	Gold Over Electroless Nickel
Inserts	Thermosetting Resin	-
	High Grade Thermoplatic	-
	Aluminium	Cadmium Yellow Chromate Over Electroless Nickel
Retention Clip	Copper Alloy	-
Seals & O-Ring	Fluorinated Silicon Rubber	-
Insert Retention Plate	Aluminium Alloy	Blue Anodized
Polarization Key	Zinc Alloy	Cadmium Olive Drab
Polarization Post	Aluminium Alloy	Cadmium Yellow Chromate
Screws	Brass	Cadmium Yellow Chromate
Washers	Copper Alloy	Cadmium Yellow Chromate
EMI Spring	Copper Alloy & Fluorinated Silicon Rubber	Tin-Lead Alloy Over Electroless Nickel

MASSES

Receptacle Shells

RECEPTACLE G (OZ)		
Shell Size 2	Shell Size 3	Shell Size 4
160 (5.64)	240 (8.47)	335 (11.82)

PLUG SHELLS

PLUG G (OZ)		
Shell Size 2	Shell Size 3	Shell Size 4
165 (5.82)	245 (8.64)	342 (12.06)

INSERTS

DESCRIPTION	INSERT FOR PLUG SHELL G (OZ)	INSERT FOR RECEPTACLE SHELL G (OZ)
MPXE2*T6	44 (1.55)	26 (0.92)
MPXE2*11T2	41 (1.45)	25 (0.88)
MPXE2*11C2	41 (1.45)	25 (0.88)
MPXE2*20T4	37 (1.31)	22 (0.78)
MPXE2*34	44 (1.55)	27 (0.95)
MPXE2*62T2	34 (1.20)	22 (0.78)
MPXE2*100	25 (0.88)	21 (0.74)
MPXE1*24	51 (1.80)	31 (1.10)
MPXE1*C12T6	55 (1.94)	33 (1.17)
MPXE1*47T2	57 (2.01)	35 (1.24)
MPXE1*60	63 (2.23)	39 (1.38)
MPXE1*126	47 (1.66)	31 (1.10)
MPXE1*150	41 (1.45)	27 (0.95)

Introduction

CONTACTS

CONTACT SIZE	PIN G (OZ)	SOCKET G (OZ)
22	0.12 (0.0043)	0.15 (0.0053)
20	0.22 (0.0078)	0.37 (0.0130)
16	0.73 (0.0258)	0.75 (0.0265)
12	1.50 (0.0530)	1.45 (0.0512)
8	1.10 (0.036)	3.80 (0.124)

SHELL ORDERING INFORMATION

The MPX shells are machined from solid aluminium alloy and have a good conductive and high resistance to corrosion thanks to cadmium yellow chromate plating.

There are 3 shell sizes which can respectively receive 2,4 and 6 inserts.

The plug shell is designed to be fitted with inserts for size 22 pin contacts and inserts for socket contacts for all other contact sizes. The plug shell has a field replaceable EMI spring and a coupling seal on each shell cavity and 3 polarization posts.

The receptacle shell is designed to be fitted with inserts for size 22 socket contacts and inserts for pin contacts for the other contact sizes. The receptacle shell has 3 polarization keys.

Plug and receptacle can be either front or rear mounted.

HOW TO ORDER SHELLS

MPX

SERIES PREFIX

SHELL SIZE
2: 2 cavities
3: 4 cavities
4: 6 cavities

SHELL TYPE
R: Receptacle shell
A: Plug shell

MODIFICATION CODE
Refer to page 6-19

POLARIZATION CODE
BLANK: Polarization device delivered unassembled
00: Polarizing keys or posts are not delivered
OTHER: Please refer to page 6-20

Introduction

INSERT ORDERING INFORMATION

Inserts are made of the thermosetting resin, high grade thermoplastic or of aluminium alloy. They have metallic retention clips to retain the contacts. Each insert has one polarization slot which has its corresponding pin in each shell cavity.

Environmental inserts have:

- A) a silicon rubber ring that ensures sealing between the insert and the shell.
- B) a rear grommet which ensures sealing around each wire crimped on a contact.
- C) an interfacial seal which ensures sealing around each protruding contact once the connector is matted.

Non-environmental inserts do not include options "b" or "c."

All standardized inserts are for rear release, rear removable contacts, please refer to page 5-13 for front release, front removable version.

HOW TO ORDER INSERTS

MPX

SERIES PREFIX

CLASS [1]
E: Insert with interfacial seal, rear grommet and o-ring
N: Insert with o-ring, without interfacial seal and rear grommet
T: Insert with o-ring and interfacial seal without rear grommet

INSERT SIZE
1: Insert for A, C and E shell cavities
2: Insert for B, D and F shell cavities

INSERT TYPE
P: Insert for plug shell
R: Insert for receptacle shell

CONTACT ARRANGEMENT [2]
Refer to pages 6-12 to 6-18

TRIAX CONTACT GROUNDING [3]
Letter omitted-triax and quadrax contacts are grounded
A-Triax contacts not grounded

CONTACT DELIVERY
Letter omitted-insert is delivered without contacts
S-Insert is delivered with crimp signal and power contacts (no coax, triax, twinax or quadrax contacts)

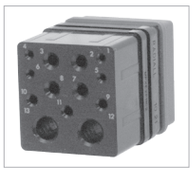

Notes

1. E, N and T classes apply to inserts for rear release rear removable contacts.
2. Inserts 100 and 150 for front release front removable contacts are available, see page 6-11 for part numbers.
3. When A is omitted triax and quadrax contacts cavities are grounded to the shell.

Introduction

HOW TO ORDER MPX ASSEMBLY KIT
How To Order Assemblied Connectors

MPX

SERIES PREFIX

CLASS [1]
E: Insert with interfacial seal, rear grommet and o-ring
N: Insert with o-ring, without interfacial seal and rear grommet
T: Insert with o-ring and interfacial seal without rear grommet

SHELL SIZE
2: 2 cavities
3: 4 cavities
4: 6 cavities

SHELL TYPE
R: Receptacle shell
A: Plug shell

INSERT COMBINATION CODE
Refer to page 6-9 to 6-11

TRIAX CONTACT GROUNDING
Letter omitted-triax and quadrax contacts are grounded
A-Triax contacts not grounded

CONTACT TYPE [2]
X: Without contacts
S: Crimp contacts
Rear release PC-Tail: see page 6-22 to 6-31 and consult us for the PCB foot print.

MODIFICATION CODE
Refer to page 6-19

POLARIZATION CODE
BLANK: Polarization device delivered unassembled
00: Polarizing keys or posts are not delivered
OTHER: Please refer to page 6-20

Notes
1. E, N and T classes apply to inserts for rear release rear removable contacts.
2. Coaxial, triaxial, twinax and quadrax contacts must be ordered separately.

Introduction

INSERT COMBINATION CODE

DOD-STD-1842 CODES (USA)

CODE	SHELL SIZE	INSERT COMBINATION ON SHELL					
		CAVITY A	CAVITY B	CAVITY C	CAVITY D	CAVITY E	CAVITY F
001	2	47T2	100	-	-	-	-
002	2	47T2	20T4	-	-	-	-
003	2	47T2	34	-	-	-	-
004	3	150	34	150	20T4	-	-
005	3	150	100	47T2	100	-	-
006	3	60	100	60	100	-	-
007	3	150	100	150	100	-	-
008	3	60	34	60	34	-	-
009	4	150	34	150	20T4	150	20T4
010	4	24	34	150	100	150	20T4
011	4	150	34	150	20T4	150	T6
012	4	24	34	150	BLANK	150	20T4

STTEA CODES (EUROPE)

CODE	SHELL SIZE	INSERT COMBINATION ON SHELL					
		CAVITY A	CAVITY B	CAVITY C	CAVITY D	CAVITY E	CAVITY F
201	2	150	34	-	/	-	-
202	3	150	20T4	BLANK	100	-	-
203	2	126	100	-	/	-	-
204	2	150	11C2	-	/	-	-
205	3	150	T6	150	T6	-	-
206	3	150	34	150	20T4	-	-
207	2	150	20T4	-	/	-	-
208	3	150	20T4	150	BLANK	-	-
209	2	47T2	11C2	-	/	-	-
210	3	150	11C2	24	100	-	-
211	2	150	11T2	-	/	-	-
212	2	60	11T2	-	-	-	-
213	3	24	34	24	20T4	-	-
214	3	24	34	BLANK	20T4	-	-
215	3	150	100	C12T6	11C2	-	-
216	2	150	100	-	-	-	-
217	2	24	11C2	-	-	-	-
218	3	24	11C2	24	T6	-	-
219	4	24	11C2	47T2	34	24	20T4
220	4	150	100	150	100	150	100
221	4	24	34	150	20T4	150	T6
222	3	150	11T2	24	100	-	-
223	3	150	11C2	150	11C2	-	-
224	2	150	62T2	-	-	-	-
225	2	60	20T4	-	-	-	-

Introduction

STTEA CODES (EUROPE)

CODE	SHELL SIZE	INSERT COMBINATION ON SHELL					
		CAVITY A	CAVITY B	CAVITY C	CAVITY D	CAVITY E	CAVITY F
226	3	150	34	150	100	-	-
227	3	150	20T4	24	BLANK	-	-
228	3	150	100	150	20T4	-	-
229	3	150	20T4	24	11C2	-	-
230	2	47T2	BLANK	-	-	-	-
231	2	24	BLANK	-	-	-	-
232	2	24	34	-	-	-	-
233	3	150	34	150	34	-	-
234	3	24	11C2	150	100	-	-
235	3	150	BLANK	150	20T4	-	-
236	4	24	34	24	BLANK	150	20T4
237	2	24	100	-	-	-	-
238	3	BLANK	11C2	BLANK	20T4	-	-
239	3	24	34	24	34	-	-
240	3	47T2	34	24	34	-	-
241	4	24	34	24	34	24	34
242	3	BLANK	11C2	BLANK	34	-	-
243	3	60	34	24	34	-	-
244	4	60	34	60	34	24	34
245	3	150	11C2	24	11C2	-	-
246	4	24	34	60	100	150	20T4
247	4	24	34	24	100	150	20T4
248	4	60	T6	60	T6	24	T6
249	4	60	T6	BLANK	T6	150	T6
250	3	24	BLANK	150	20T4	-	-
251	3	126	34	126	20T4	-	-
252	3	150	34	BLANK	11C2	-	-
253	3	24	100	150	20T4	-	-
254	3	150	62T2	150	62T2	-	-
255	3	150	11C2	BLANK	34	-	-
256	2	60	11C2	-	-	-	-
257	3	150	100	C12T6	34	-	-
258	3	150	11C2	150	34	-	-
259	4	150	20T4	24	T6	150	11T2
260	3	150	T6	150	34	-	-
261	3	150	11C2	126	34	-	-
262	3	150	100	150	62T2	-	-
263	2	60	34	-	-	-	-
264	3	150	T6	150	100	-	-
265	3	C12T6	11C2	150	100	-	-

Introduction

STTEA CODES (EUROPE)

CODE	SHELL SIZE	INSERT COMBINATION ON SHELL					
		CAVITY A	CAVITY B	CAVITY C	CAVITY D	CAVITY E	CAVITY F
266	2	47T2	11T2	-	-	-	-
267	4	150	34	150	100	150	34
269	2	126	11T2	-	-	-	-
270	3	150	11T2	150	20T4	-	-
271	3	150	11T2	150	11T2	-	-
272	4	150	34	150	100	150	20T4
273	4	126	100	150	100	126	100
274	3	C12T6	11C2	BLANK	100	-	-
275	3	150	T6	150	BLANK	-	-
276	2	150	T6	/	/	-	-
277	3	C12T6	34	60	34	-	-
278	3	150	20T4	150	20T4	-	-
279	3	60	20T4	60	20T4	-	-
280	4	150	100	150	100	150	62T2
281	3	150	11C2	150	100	-	-
282	3	150	11T2	150	100	-	-
283	3	BLANK	20T4	150	20T4	-	-
284	3	150	20T4	150	100	-	-
285	3	150	20T4	150	11C2	-	-
286	3	126	T6	150	20T4	-	-
287	3	150	11C2	150	20T4	-	-

INSERTS LAYOUTS FRONT RELEASE FRONT REMOVABLE

CONTACT ARRANGEMENTS FOR FRONT RELEASE FRONT REMOVABLE CONTACTS

These inserts are available for receptacle shell only and are designed to be fitted with front release front removable size 22 pc tail contacts and thus do not have rear grommets. Socket insert mating side shown. These inserts are not normalized.

618500061

NUMBER OF CONTACTS	CONTACT SIZE	LOCATION
150	22	1 to 150

618500081

NUMBER OF CONTACTS	CONTACT SIZE	LOCATION
100	22	1 to 100

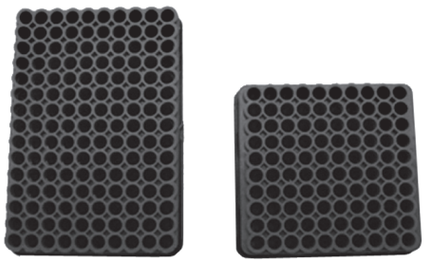

Introduction

INSERT LAYOUT FOR CAVITIES A, C OR E

The symbol A represents that the insert is available in a non-grounded version (see page 6-7 for triax contact grounding)

INSERT NAME	EQUIPMENT SIDE RECEPTACLE SHELL			AVIONIC SIDE PLUG SHELL	
	VERSION N	VERSION E	VERSION T	VERSION N	VERSION E
24 (A)					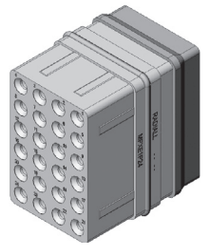
	24 × #12 RR/RR	24 × #12 RR/RR	24 × #12 RR/RR	24 × #12 RR/RR	24 × #12 RR/RR
35 (A)					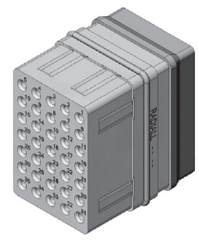
	35 × #16 RR/RR	35 × #16 RR/RR	35 × #16 RR/RR	35 × #16 RR/RR	35 × #16 RR/RR
60 (A)					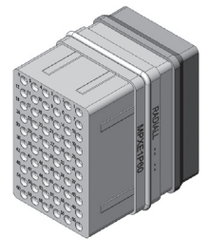
	60 × #20 RR/RR	60 × #20 RR/RR	60 × #20 RR/RR	60 × #20 RR/RR	60 × #20 RR/RR
126 (A)				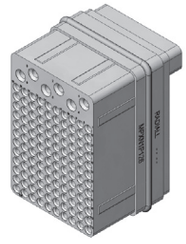	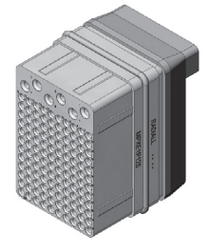
	120 × #22 RR/RR 6 × #16 RR/RR	120 × #22 RR/RR 6 × #16 RR/RR	120 × #22 RR/RR 6 × #16 RR/RR	120 × #22 RR/RR 6 × #16 RR/RR	120 × #22 RR/RR 6 × #16 RR/RR

Introduction

The symbol A represents that the insert is available in a non-grounded version (see page 6-7 for triax contact grounding)

INSERT NAME	EQUIPMENT SIDE RECEPTACLE SHELL			AVIONIC SIDE PLUG SHELL	
	VERSION N	VERSION E	VERSION T	VERSION N	VERSION E
150 (A)					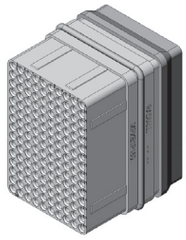
	150 × #22 RR/RR	150 × #22 RR/RR	150 × #22 RR/RR	150 × #22 RR/RR	150 × #22 RR/RR
47T2 (A)				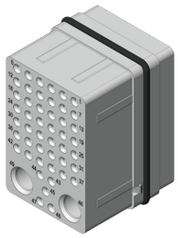	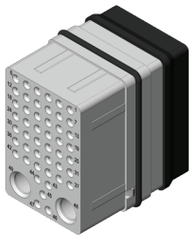
	47 × #20 RR/RR 2 × #8 RR/RR	47 × #20 RR/RR 2 × #8 RR/RR	47 × #20 RR/RR 2 × #8 RR/RR	47 × #20 RR/RR 2 × #8 RR/RR	47 × #20 RR/RR 2 × #8 RR/RR
68Q4 (A)	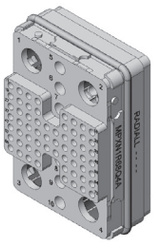		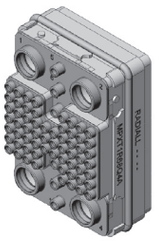	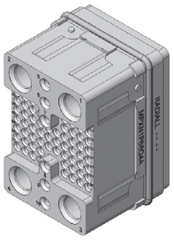	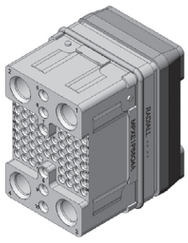
	62 × #22 RR/RR 6 × #16 RR/RR 4 × #8 RR/RR	62 × #22 RR/RR 6 × #16 RR/RR 4 × #8 RR/RR	62 × #22 RR/RR 6 × #16 RR/RR 4 × #8 RR/RR	62 × #22 RR/RR 6 × #16 RR/RR 4 × #8 RR/RR	62 × #22 RR/RR 6 × #16 RR/RR 4 × #8 RR/RR

Introduction

The symbol A represents that the insert is available in a non-grounded version (see page 6-7 for triax contact grounding)

INSERT NAME	EQUIPMENT SIDE RECEPTACLE SHELL			AVIONIC SIDE PLUG SHELL	
	VERSION N	VERSION E	VERSION T	VERSION N	VERSION E
70C1 (A)	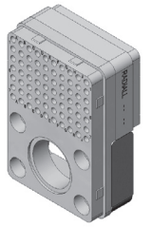	Not Available	Not Available	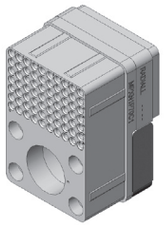	Not Available
	70 × #22 RR/RR 1 × #1 FR/RR			70 × #22 RR/RR 1 × #1 FR/RR	
C12T6 (Metallic Insert)					
	12 × #12 RR/RR 6 × #8 RR/RR	12 × #12 RR/RR 6 × #8 RR/RR	12 × #12 RR/RR 6 × #8 RR/RR	12 × #12 RR/RR 6 × #8 RR/RR	12 × #12 RR/RR 6 × #8 RR/RR

Introduction

The symbol A represents that the insert is available in a non-grounded version (see page 6-7 for triax contact grounding)

INSERT NAME	EQUIPMENT SIDE RECEPTACLE SHELL			AVIONIC SIDE PLUG SHELL	
	VERSION N	VERSION E	VERSION T	VERSION N	VERSION E
Q11 (Metallic Insert)					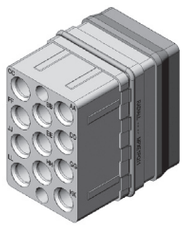
	11 × #8 RR/RR	11 × #8 RR/RR	11 × #8 RR/RR	11 × #8 RR/RR	11 × #8 RR/RR
T10 (Metallic Insert)					
	10 × #8 RR/RR	10 × #8 RR/RR	10 × #8 RR/RR	10 × #8 RR/RR	10 × #8 RR/RR

Introduction

INSERT LAYOUT FOR CAVITIES B, D OR F

The symbol A represents that the insert is available in a non-grounded version (see page 6-7 for triax contact grounding)

INSERT NAME	EQUIPMENT SIDE RECEPTACLE SHELL			AVIONIC SIDE PLUG SHELL	
	VERSION N	VERSION E	VERSION T	VERSION N	VERSION E
25 (A)				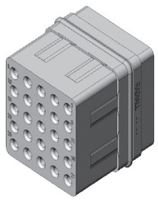	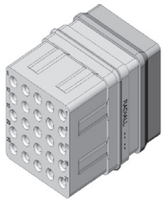
	25 × #16 RR/RR	25 × #16 RR/RR	25 × #16 RR/RR	25 × #16 RR/RR	25 × #16 RR/RR
34 (A)					
	24 × #20 RR/RR 10 × #16 RR/RR	24 × #20 RR/RR 10 × #16 RR/RR	24 × #20 RR/RR 10 × #16 RR/RR	24 × #20 RR/RR 10 × #16 RR/RR	24 × #20 RR/RR 10 × #16 RR/RR
100 (A)					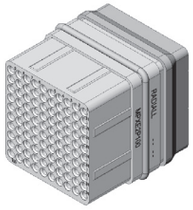
	100 × #22 RR/RR	100 × #22 RR/RR	100 × #22 RR/RR	100 × #22 RR/RR	100 × #22 RR/RR
11C2 (A)					
	4 × #20 RR/RR 3 × #16 RR/RR 4 × #12 RR/RR 2 × #5 RR/RR	4 × #20 RR/RR 3 × #16 RR/RR 4 × #12 RR/RR 2 × #5 RR/RR	4 × #20 RR/RR 3 × #16 RR/RR 4 × #12 RR/RR 2 × #5 RR/RR	4 × #20 RR/RR 3 × #16 RR/RR 4 × #12 RR/RR 2 × #5 RR/RR	4 × #20 RR/RR 3 × #16 RR/RR 4 × #12 RR/RR 2 × #5 RR/RR

Introduction

The symbol A represents that the insert is available in a non-grounded version (see page 6-7 for triax contact grounding)

INSERT NAME	EQUIPMENT SIDE RECEPTACLE SHELL			AVIONIC SIDE PLUG SHELL	
	VERSION N	VERSION E	VERSION T	VERSION N	VERSION E
11T2 (A)				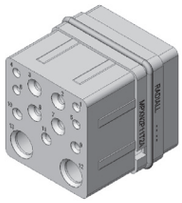	
	4 × #20 RR/RR 3 × #16 RR/RR 2 × #8 RR/RR 4 × #12 RR/RR	4 × #20 RR/RR 3 × #16 RR/RR 2 × #8 RR/RR 4 × #12 RR/RR	4 × #20 RR/RR 3 × #16 RR/RR 2 × #8 RR/RR 4 × #12 RR/RR	4 × #20 RR/RR 3 × #16 RR/RR 2 × #8 RR/RR 4 × #12 RR/RR	4 × #20 RR/RR 3 × #16 RR/RR 2 × #8 RR/RR 4 × #12 RR/RR
20Q4 (A)		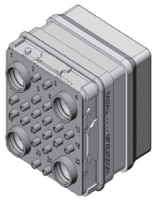		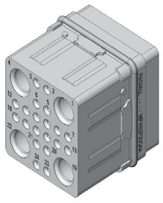	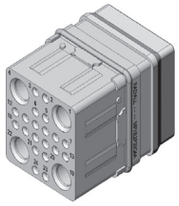
	20 × #20 RR/RR 4 × #8 Quadrax RR/RR	20 × #20 RR/RR 4 × #8 Quadrax RR/RR	20 × #20 RR/RR 4 × #8 Quadrax RR/RR	20 × #20 RR/RR 4 × #8 Quadrax RR/RR	20 × #20 RR/RR 4 × #8 Quadrax RR/RR
20T4 (A)	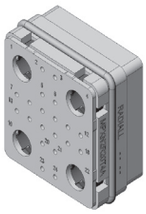	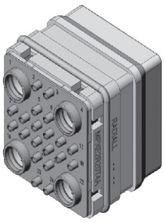	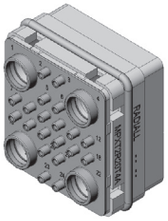		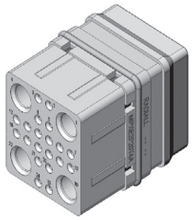
	20 × #20 RR/RR 4 × #8 RR/RR	20 × #20 RR/RR 4 × #8 RR/RR	20 × #20 RR/RR 4 × #8 RR/RR	20 × #20 RR/RR 4 × #8 RR/RR	20 × #20 RR/RR 4 × #8 RR/RR

Introduction

The symbol A represents that the insert is available in a non-grounded version (see page 6-7 for triax contact grounding)

INSERT NAME	EQUIPMENT SIDE RECEPTACLE SHELL			AVIONIC SIDE PLUG SHELL	
	VERSION N	VERSION E	VERSION T	VERSION N	VERSION E
62T2 (A)				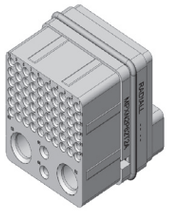	
	60 × #22 RR/RR 2 × #16 RR/RR 2 × #8 RR/RR	60 × #22 RR/RR 2 × #16 RR/RR 2 × #8 RR/RR	60 × #22 RR/RR 2 × #16 RR/RR 2 × #8 RR/RR	60 × #22 RR/RR 2 × #16 RR/RR 2 × #8 RR/RR	60 × #22 RR/RR 2 × #16 RR/RR 2 × #8 RR/RR
Q6 (Metallic Insert)				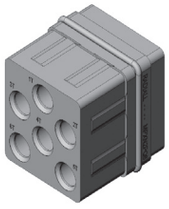	
	6 × #8 RR/RR	6 × #8 RR/RR	6 × #8 RR/RR	6 × #8 RR/RR	6 × #8 RR/RR
T6 (Metallic Insert)					
	6 × #8 RR/RR	6 × #8 RR/RR	6 × #8 RR/RR	6 × #8 RR/RR	6 × #8 RR/RR

Introduction

MODIFICATION CODE

CODE	RECEPTACLE SHELL	PLUG SHELL
00	Sizes 2,3 and 4 : All Holes Ø .150 inch (3.80 mm)	Sizes 2,3 and 4 : All Holes Ø .150 inch (3.80 mm)
10	Sizes 2,3 and 4: All Holes Fitted with M3 × 0.02 inch (0.50 mm) clinch-nuts	Sizes 2,3 and 4: All Holes Fitted with M3 × 0.02 inch (0.50 mm) clinch-nuts

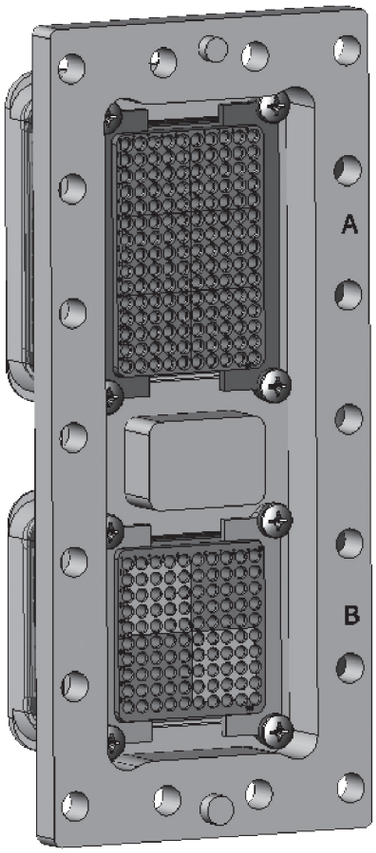

CODE 00

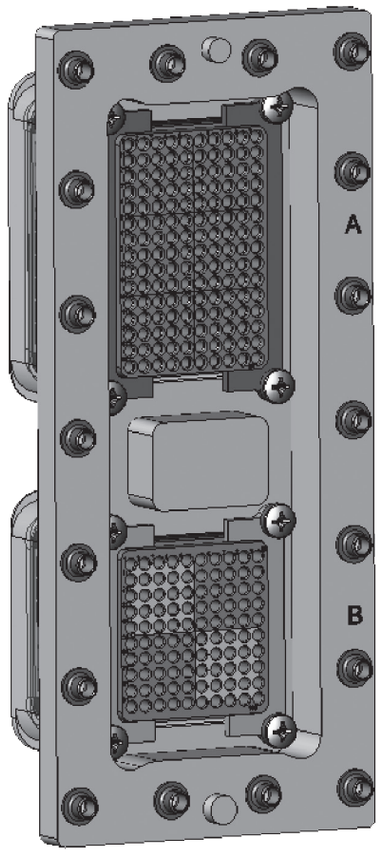

CODE 10

Introduction

POLARIZATION CODE

POSITION OF POLARIZATION KEYS & POSTS

Connectors are shown front side and with cavity A upwards.

POSITION CODINGS

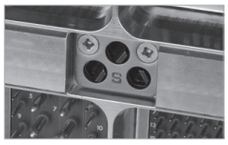

Dark area represents the polarizing post

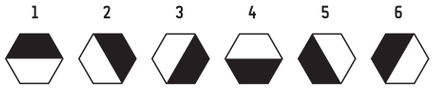

Clear portion represents the key hole

CODE NUMBER	RECEPTACLE SHELL			PLUG SHELL		
	LEFT KEY	CENTER KEY	RIGHT KEY	LEFT POST	CENTER POST	RIGHT POST
00	-	-	-	-	-	-
01	4	4	4	1	1	1
02	4	4	3	2	1	1
03	4	4	2	3	1	1
04	4	4	1	4	1	1
05	4	4	6	5	1	1
06	4	4	5	6	1	1
07	5	4	4	1	1	6
08	5	4	3	2	1	6
09	5	4	2	3	1	6
10	5	4	1	4	1	6
11	5	4	6	5	1	6
12	5	4	5	6	1	6
13	6	4	4	1	1	5
14	6	4	3	2	1	5
15	6	4	2	3	1	5
16	6	4	1	4	1	5
17	6	4	6	5	1	5
18	6	4	5	6	1	5
19	1	4	4	1	1	4
20	1	4	2	2	1	4
21	1	4	2	3	1	4
22	1	4	1	4	1	4
23	1	4	6	5	1	4
24	1	4	5	6	1	4
25	2	4	4	1	1	3
26	2	4	3	2	1	3
27	2	4	2	3	1	3
28	2	4	1	4	1	3
29	2	4	6	5	1	3

CODE NUMBER	RECEPTACLE SHELL			PLUG SHELL		
	LEFT KEY	CENTER KEY	RIGHT KEY	LEFT POST	CENTER POST	RIGHT POST
30	2	4	5	6	1	3
31	3	4	4	1	1	2
32	3	4	3	2	1	2
33	3	4	2	3	1	2
34	3	4	1	4	1	2
35	3	4	6	5	1	2
36	3	4	5	6	1	2
37	4	3	4	1	2	1
38	4	3	3	2	2	1
39	4	3	2	3	2	1
40	4	3	1	4	2	1
41	4	3	6	5	2	1
42	4	3	5	6	2	1
43	5	3	4	1	2	6
44	5	3	3	2	2	6
45	5	3	2	3	2	6
46	5	3	1	4	2	6
47	5	3	6	5	2	6
48	5	3	5	6	2	6
49	6	3	4	1	2	5
50	6	3	3	2	2	5
51	6	3	2	3	2	5
52	6	3	1	4	2	5
53	6	3	6	5	2	5
54	6	3	5	6	2	5
55	1	3	4	1	2	4
56	1	3	3	2	2	4
57	1	3	2	3	2	4
58	1	3	1	4	2	4
59	1	3	6	5	2	4

Introduction

POSITION CODINGS

CODE NUMBER	RECEPTACLE SHELL			PLUG SHELL		
	LEFT KEY	CENTER KEY	RIGHT KEY	LEFT POST	CENTER POST	RIGHT POST
60	1	3	5	6	2	4
61	2	3	4	1	2	3
62	2	3	3	2	2	3
63	2	3	2	3	2	3
64	2	3	1	4	2	3
65	2	3	6	5	2	3
66	2	3	5	6	2	3
67	3	3	4	1	2	2
68	3	3	3	2	2	2
69	3	3	2	3	2	2
70	3	3	1	4	2	2
71	3	3	6	5	2	2
72	3	3	5	6	2	2
73	4	2	4	1	3	1
74	4	2	3	2	3	1
75	4	2	2	3	3	1
76	4	2	1	4	3	1
77	4	2	6	5	3	1
78	4	2	5	6	3	1
79	5	2	4	1	3	6
80	5	2	3	2	3	6
81	5	2	2	3	3	6
82	5	2	1	4	3	6
83	5	2	6	5	3	6
84	5	2	5	6	3	6
85	6	2	4	1	3	5
86	6	2	3	2	3	5
87	6	2	2	3	3	5
88	6	2	1	4	3	5
89	6	2	6	5	3	5

CODE NUMBER	RECEPTACLE SHELL			PLUG SHELL		
	LEFT KEY	CENTER KEY	RIGHT KEY	LEFT POST	CENTER POST	RIGHT POST
94	1	2	1	4	3	4
95	1	2	6	5	3	4
96	1	2	5	6	3	4
97	2	2	4	1	3	3
98	2	2	3	2	3	3
99	2	2	2	3	3	3

Introduction

CONTACTS

The MPX series contacts are offered in crimp and pc tail termination. Pin contacts are installed in the receptacle shell and socket contacts in the plug shell except size 22 contacts for which pin contacts are installed in the plug shell and socket contacts in the receptacle shell.

Size 22 contacts in pc tail termination are offered in both rear release rear removable and front release front removable style. All the other sizes of contacts are offered in the rear release rear removable style only. The contacts are installed and removed using normalized MILI81969 tooling. They also have low insertion and extraction force.

Following is the contacts range available in types and sizes.

- Size 22 signal contacts
- Sizes 20, 16 and 12 power contacts
- Sizes 12, 16, 5 and 8 coaxial contacts
- Size 8 twinax contacts for shielded twisted pairs
- Size 8 quadrax contacts

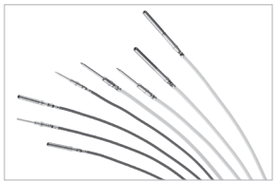

SIGNAL & POWER CRIMP CONTACTS
Release Rear Removable

CONTACT SIZE [2]	WIRE				PIN P/N	SOCKET P/N	CRIMPING TOOL RADIALL P/N (MIL P/N)	POSITIONER P/N	SELECTOR P/N	INS/EXT TOOL P/N
	AWG	CROSS SECTION (MM²)	WIRE OUTSIDE DIA. INCH (MM)	STRIPPING LENGTH INCH (MM)						
-	26	0.14	0.030 (0.76) to 0.052 (1.32)	0.137 (3.5)	618200	618300	282281 (M22520/ 2-01)	282970 (M22520/ 2-23)	3	282885 (M81969/ 1-01)
	24	0.21							3	
	22	0.38							4	
20 Reduced Crimp Barrel	26	0.14	0.030 (0.76) to 0.052 (1.32)	0.157 (4.0)	-	618311		282971 (M22520/ 2-08)	3	282549029 (M81969/ 14-10)
	24	0.21							3	
	22	0.38							4	
20	24	0.21	0.035 (0.89) to 0.060 (1.52)		618210	618310			5	
	22	0.38							6	
	20	0.60							7	
16	20	0.60	0.048 (1.21) to 0.080 (2.03)	0.236 (6.0)	618230	618330	282291 (M22520/ 1-01)	282972 (M22520/ 1-02)	4	282515 (M81969/ 14-03)
	18	0.93							5	
	16	1.34							6	
12	14	3.18	0.091 (2.31) to 0.114 (2.90)		618240	618340		282579 (M22520/ 1-11)	7	282549004 (M81969/ 14-04)
	12	1.91							8	
12 Reduced Crimp Barrel	20	0.60	0.048 (1.21) to 080 (2.03)		-	618341			4	
	18	0.93							5	
	16	1.34							6	
12 Enlarged Crimp Barrel	10	5.0	0.234 (5.70)	0.354 (9.0)	-	618342	282296 (DANIELS M300 BT) [1]		1	
8 Non-Environmental	10	5.0	0.234 (5.70)	0.354 (9.0)	618270	618370		282586	6	282549001 (M81969/ 28-03)
8 Environmental					618270001	618370001				

Notes

1. DANIELS WA27-309-EP air pressure tool with crimp setting 5 can also be used
Crimp setting 5 is not adjustable and must be set by the factory
2. Contacts size 22, 20, 16 and 12 are M39029/94 & M39029/93 or EN3155/026 & EN3155/027 design

Introduction

SIGNAL & POWER PC TAIL CONTACTS
Front Release Front Removable

For details on A & B dimensions, refer to page 6-34.

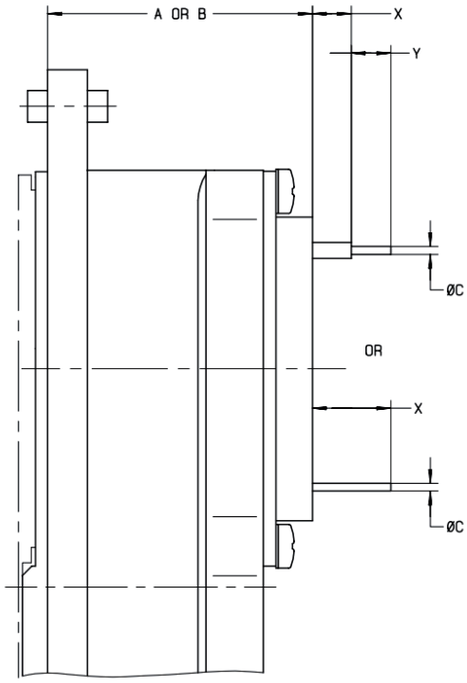

GOLD PC TAIL CONTACTS

CONTACT SIZE	CONTACT ARRANGEMENT	PIN	SOCKET	EXT. TOOL	X INCH (MM)	Y INCH (MM)	C INCH (MM)
22	618500061 and 618500081	-	618304001	282500	0.163/0.191 (4.15/4.85)	0.173/0.181 (4.40/4.60)	0.024/0.027 (0.60/0.70)
		-	618304002		0.085/0.112 (2.15/2.85)	0.232/0.240 (5.90/6.10)	
		-	618360		0.150/0.180 (3.80/4.60)	N/A	
		-	618361		0.252/0.283 (6.40/7.20)	N/A	
		-	618362		0.374/0.405 (9.50/10.3)	N/A	

PRE-TINNED PC TAIL CONTACTS

CONTACT SIZE	CONTACT ARRANGEMENT	PIN	SOCKET	EXT. TOOL	X INCH (MM)	Y INCH (MM)	C INCH (MM)
22	618500061 and 618500081	-	618304003	282500	0.163/0.191 (4.15/4.85)	0.173/0.201 (4.40/5.10)	0.031 (0.80) max
		-	618304004		0.085/0.112 (2.15/2.85)	0.232/0.260 (5.90/6.60)	
		-	618360001		0.150/0.201 (3.80/5.10)	N/A	
		-	618361001		0.252/0.303 (6.40/7.70)	N/A	
		-	618362001		0.374/0.425 (9.50/10.80)	N/A	

Introduction

SIGNAL & POWER PC TAIL CONTACTS
Rear Release Rear Removable

GOLD PC TAIL CONTACTS

CONTACT SIZE	CONTACT ARRANGEMENT	PIN	SOCKET	EXT. TOOL	X INCH (MM)	Y INCH (MM)	C INCH (MM)
22	150 126 70C12 100 62T2	-	618302	282885 (M81969/1-01) or 282522 (M81969/14-01)	0.059/0.087 (1.50/2.20)	0.145/0.154 (3.70/3.90)	0.024/0.027 (0.60/0.70)
		-	618303001		0.209/0.248 (5.30/6.30)	N/A	
		-	618303002		0.391/0.431 (9.95/10.95)	N/A	
		-	618303003		0.138/0.177 (3.50/4.50)	N/A	
		-	618303004		0.150/0.169 (3.80/4.30)	0.145/0.154 (3.70/3.90)	
		-	618303005		0.303/0.343 (7.70/8.70)	N/A	

PRE-TINNED PC TAIL CONTACTS

CONTACT SIZE	CONTACT ARRANGEMENT	PIN	SOCKET	EXT. TOOL	X INCH (MM)	Y INCH (MM)	C INCH (MM)
22	150 126 70C12 100 62T2	-	618302001	282885 (M81969/1-01) or 282522 (M81969/14-01)	0.059/0.107 (1.50/2.70)	0.145/0.174 (3.70/4.40)	0.031 (0.80) max
		-	618303007		0.209/0.268 (5.30/6.80)	N/A	
		-	618303008		0.391/0.451 (9.95/14.45)	N/A	
		-	618303009		0.138/0.197 (3.50/5.00)	N/A	
		-	618303010		0.150/0.189 (3.80/4.80)	0.145/0.174 (3.70/4.40)	
		-	618303011		0.303/0.363 (7.70/9.20)	N/A	

GOLD PC TAIL CONTACTS

CONTACT SIZE	CONTACT ARRANGEMENT	PIN	SOCKET	EXT. TOOL	X INCH (MM)	Y INCH (MM)	C INCH (MM)
20	11T2 11C2 34, 60 47T2 20T4	618213001	-	282886 (M81969/1-02) or 282549029 (M81969/14-02)	0.281/0.321 (7.15/8.15)	N/A	0.037/0.040 (0.95/1.01)
		618213002	-		0.137/0.177 (3.50/4.50)	N/A	
		618213005	-		0.517/0.557 (13.15/14.15)	N/A	0.032/0.034 (0.81/0.86)
		-	618316001		0.391/0.431 (9.95/10.95)	N/A	0.024/0.027 (0.60/0.70)

PRE-TINNED PC TAIL CONTACTS

CONTACT SIZE	CONTACT ARRANGEMENT	PIN	SOCKET	EXT. TOOL	X INCH (MM)	Y INCH (MM)	C INCH (MM)
20	11T2 11C2 34, 60 47T2 20T4	618213006	-	282886 (M81969/1-02) or 282549029 (M81969/14-02)	0.281/0.341 (7.15/8.65)	N/A	0.045 (1.15) max
		618213007	-		0.137/0.197 (3.50/5.00)	N/A	
		618213008	-		0.517/0.577 (13.15/14.65)	N/A	0.037 (0.95) max

Introduction

SIGNAL & POWER PC TAIL CONTACTS
Rear Release Rear Removable

GOLD PC TAIL CONTACTS

CONTACT SIZE	CONTACT ARRANGEMENT	PIN	SOCKET	EXT. TOOL	X INCH (MM)	Y INCH (MM)	C INCH (MM)
16	62T2 11C2 11T2 25, 34 35, 126	618233001	-	282546 (M81969/1-03) or 282515 (M81969/14-03)	0.281/0.321 (7.15/8.15)	N/A	0.057/0.061 (1.45/1.55)
		618233002	-		0.370/0.409 (9.40/10.40)	N/A	
		618233003	-		0.137/0.177 (3.50/4.50)	N/A	

PRE-TINNED PC TAIL CONTACTS

CONTACT SIZE	CONTACT ARRANGEMENT	PIN	SOCKET	EXT. TOOL	X INCH (MM)	Y INCH (MM)	C INCH (MM)
16	62T2 11C2 11T2 25, 34 35, 126	618233001	-	282546 (M81969/1-03) or 282515 (M81969/14-03)	0.281/0.321 (7.15/8.15)	N/A	0.057/0.061 (1.45/1.55)
		618233002	-		0.370/0.409 (9.40/10.40)	N/A	
		618233003	-		0.137/0.177 (3.50/4.50)	N/A	

GOLD PC TAIL CONTACTS

CONTACT SIZE	CONTACT ARRANGEMENT	PIN	SOCKET	EXT. TOOL	X INCH (MM)	Y INCH (MM)	C INCH (MM)
12	11C2 11T2, 6T4 24, C12T6 70C12	618243001	-	282547 (M81969/28-02) or 282549004 (M81969/14-04)	0.281/0.321 (7.15/8.15)	N/A	0.076/0.080 (1.95/2.05)
		618243002	-		0.137/0.177 (3.50/4.50)	N/A	
		618243003	-		0.076/0.120 (1.95/3.05)	N/A	

PRE-TINNED PC TAIL CONTACTS

CONTACT SIZE	CONTACT ARRANGEMENT	PIN	SOCKET	EXT. TOOL	X INCH (MM)	Y INCH (MM)	C INCH (MM)
12	11C2 11T2, 6T4 24, C12T6 70C12	618243001	-	282547 (M81969/28-02) or 282549004 (M81969/14-04)	0.281/0.321 (7.15/8.15)	N/A	0.076/0.080 (1.95/2.05)
		618243002	-		0.137/0.177 (3.50/4.50)	N/A	
		618243003	-		0.076/0.120 (1.95/3.05)	N/A	

Introduction

COAXIAL CRIMP CONTACTS
Rear Release Rear Removable
DESIGN AS PER EN3155-028 & 029 [1]

CONTACT SIZE	CONTACT ARRANGEMENT	CABLE	PIN	SOCKET	CENTER CONTACT			OUTER BODY		
					CRIMPING TOOL	POSITIONER TOOL	SEL	CRIMPING TOOL	POSITIONER TOOL	SEL
16	126 62T2 11C2 11T2 34 25 35	RG179 RG316 KX22DS ASNE0752WS ASNE0632WK	618150	618050	282281 (M22520/2-01)	282555	4	282292 (M22520/4-01)	282556	-
		ASNE0639XY					1			
		F1703-134 AXON P813859 & P822817 ASNE0690WL	618151	618051			2			
		KX21DS	-	618053						
		RG178 KX21	618154	618054						
		ASNE0633WG					1			

DESIGN AS PER EN3155-030 & 031/M39029/73 & 74

CONTACT SIZE [2]	CONTACT ARRANGEMENT	CABLE	PIN	SOCKET	CENTER CONTACT			OUTER BODY		
					CRIMPING TOOL	POSITIONER TOOL	SEL	CRIMPING TOOL	POSITIONER TOOL	SEL
12	11C2 11T2 24 6T4 C12T6 70C12	RG179 RG316 ASNE0639XY	618140	618040	282281 (M22520/2-01)	282580	4	282297 (M22520/31-01)	282581	-
		ASNE0690WL	618140003	618040003			3			
		BUS 3910 AXON P503031	618141	618041			5			
		ASNE0633WG RG178 KX21	618142	618042			4			

DESIGN AS PER EN3155-032 & 033 M39029/99 & 100

CONTACT SIZE	CONTACT ARRANGEMENT	CABLE	PIN	SOCKET	CENTER CONTACT			OUTER BODY	
					CRIMPING TOOL	POSITIONER TOOL	SEL	CRIMPING TOOL	POSITIONER TOOL
5	11C2	RG58 KX15	618120 [3]	618020 [3]	282281 (M22520/2-01)	282550	6	282293 (M22520/5-01)	282246 (M22520/ 5-05 hex A)
		RG141 ASNE0293XF					8		282246 (M22520/ 5-05 hex B)
		RG142 RG223	-	618021001			8		
		RG400					6		
		ASNE0691WM	618124001	618024001			8		
		ASNE0639XY RG179 RG187	618123 [3]	618023 [3]			7		

Notes

1. Ins/ext tool: 282546 (M81696/1-03)
2. Ins/ext tool: 282547 (M81696/28-02)
3. Ins/Ext tool: 282946 (M81969/28-01)

Introduction

A RADIALL DESIGN

Non-environmental size 8 pin contacts are delivered with an alignment boot (p/n: 618920) to reduce the play at the contact extremity.

CONTACT SIZE	CONTACT ARRANGEMENT	CABLE	PIN	SOCKET	CENTER CONTACT			OUTER BODY	
					CRIMPING TOOL	POSITIONER TOOL	SEL	CRIMPING TOOL	POSITIONER TOOL
8	62T220T4 11T2 T6 47T2 C12T6 6T4	RG58 KX15 RG316 RG141	-	618030 [1]	282281 (M22520/2-01)	282572	6	282293 (M22520/5-01)	282236 (M22520/5-45 hex A)
							7		
							8		
		KX22 RG316 RG174	-	618032 [1]			7		
		RG400	-	618033 [1]			8		
		ASNE0691WM	618135	618035 [1]	Solder				

PC TAIL COAX CONTACTS

Rear Release Rear Removable

SIZE 16 PC TAIL MATING INTERFACE AS PER EN3155-028 & 029

CONTACT TYPE	PART NUMBER [2]	CONTACT DRAWING [3]	REAR EXTENSION FROM ALL INSERT INCH (MM)	REAR EXTENSION FROM 126 & 62T2 INSERTS ONLY INCH (MM)
Pin	618153	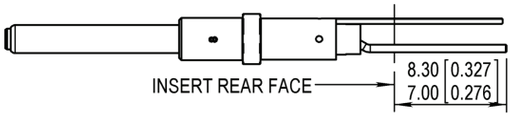	0.275/0.327 (7.00/8.30)	0.297/0.349 (7.55/8.85).
Pin	618153001	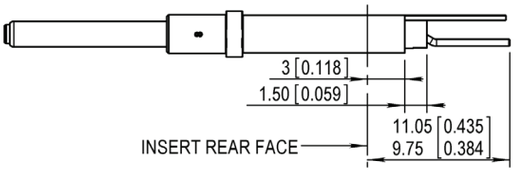	0.383/0.435 (9.75/11.05)	0.405/0.457 (10.30/11.60).

Notes

1. Ins/Ext tool: 282549001 (M81969/28-03)
2. Contacts Ins/ext tool: 282546 (M81969/1-03).
3. For PC drill patern please contact Radiall.

Introduction

SIZE 16 PRE-TINNED PC TAIL

CONTACT TYPE	PART NUMBER [1]	CONTACT DRAWING [2]	REAR EXTENSION FROM ALL INSERT INCH (MM)	REAR EXTENSION FROM 126 & 62T2 INSERTS ONLY INCH (MM)
Pin	618153002	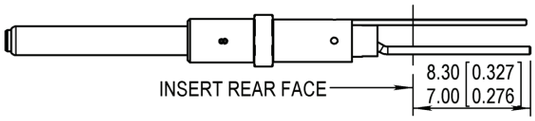	0.275/0.346 (7.00/8.80)	0.297/0.368 (7.55/9.35)
Pin	618153003	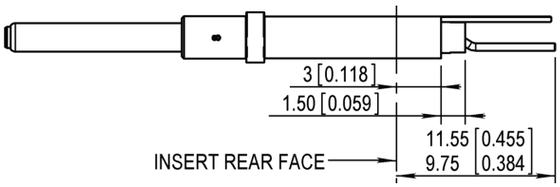	0.383/0.455 (9.75/11.55)	0.405/0.476 (10.30/12.10)

Notes

1. Contacts Ins/ext tool: 282546 (M81969/1-03).

2. For PC drill patern please contact Radiall.

Introduction

QUADRAX CONTACTS
Rear Release Rear Removable
SIZE 8 QUADRAX CONTACTS DESIGN AS PER EN3155-072 & 073

CABLE	CONTACT TYPE	PART NUMBER [1] NON-ENVIRONMENTAL	PART NUMBER [1] ENVIRONMENTAL	INS/EXT TOOL
ABS972 ABS1503KD24	Pin	620175010	620175011	282549001 M81969/14.06
	Socket	620075010	620075011	
TENSOLITE NF24Q100 (100Ω)	Pin	620175050	620175051	
	Socket	620075050	620075051	
GORE RCN8487-1 (110Ω)	Pin	620175021	620175020	
	Socket	620075021	620075020	
THERMAX 956S-4T200 GORE RCN8422 (110Ω)	Pin	620179002	620179001	
	Socket	620079002	620079001	

CONCENTRIC TWINAX CONTACTS
Rear Release Rear Removable
SIZE 8 CRIMP CONTACTS

Design as per EN3155-034 & 035 interchangeable with 042 & 043 interface in accordance with M39029/95.

CONTACT SIZE [1 & 3]	CONTACT ARRANGEMENT	CABLE	PIN CONTACT [2]	SOCKET CONTACT [2]
8	6T4 62T2 20T4 11T2 T6 47T2 C12T6	EN 3375-004 EN 3375-005	618160	618060
		EN 3375-003 M17/176-00002	618161	618061
		EN 3375-003 EN 3375-004 EN 3375-005 M17/176-00002	618162	618062
		ECS 700	618166	618066
		M17/176-00002	618180	-

Notes

1. Ins/Ext tool: 282549001 (M81969/28-03).
2. Add 001 at the end of the contact part number to be provided with a sealing boot with the contact.
3. Non-environmental size 8 pin contacts are delivered with an alignment boot (p/n: 618920) to reduce the play at the contact extremity.

Introduction

CONCENTRIC TWINAX CONTACTS
Rear Release Rear Removable
SIZE 8 PC TAIL CONTACTS MATING INTERFACE DESIGN AS PER EN3155-034 & 035

CONTACT TYPE	PART NUMBER [1]	CONTACT DRAWING	REAR EXTENSION FROM ALL INSERT INCH (MM)	PC TAIL LENGTH INCH (MM)	REAR EXTENSION FROM 62T2 INSERT ONLY INCH (MM)
Pin	618 163	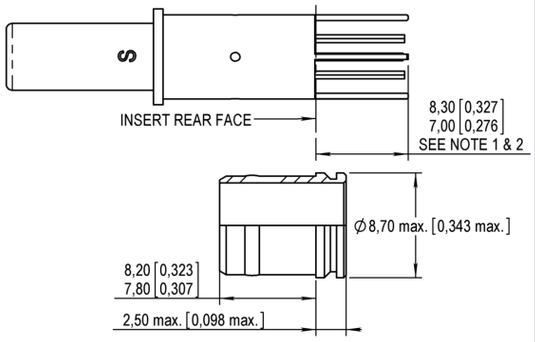	0.275/0.327 (7.00/8.30)	0.275/0.327 (7.00/8.30)	0.199/0.250 (5.05/6.35)
Pin	618 164	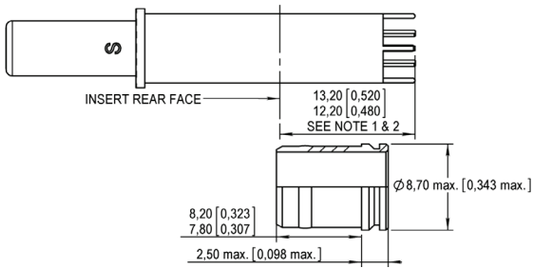	0.480/0.520 (12.20/13.20)	0.098/0.138 (2.50/3.50)	0.403/0.443 (10.25/11.25)
Pin	618164001	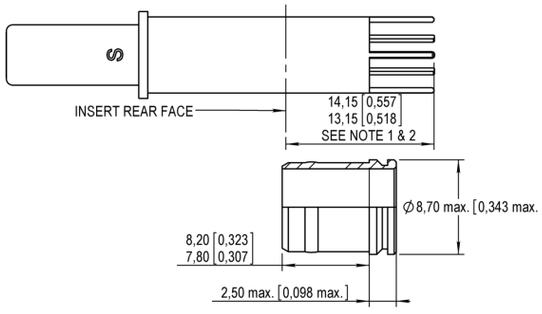	0.518/0.557 (13.15/14.15)	0.234/0.238 (5.95/6.05)	0.441/0.480 (11.20/12.20)

Notes

1. Non-environmental size 8 pin contacts are delivered with an alignment boot (p/n: 618920) to reduce the play at the contact extremity.
2. This alignment boot protrudes 2.5 mm max from the rear face of the insert; these 2.5 mm are taken into account in the dimensions listed above.

Introduction

CONCENTRIC TWINAX CONTACTS
Rear Release Rear Removable
SIZE 8 PRE-TINNED PC TAIL CONTACTS

CONTACT TYPE	PART NUMBER [1]	CONTACT DRAWING	REAR EXTENSION FROM ALL INSERT INCH (MM)	PC TAIL LENGTH INCH (MM)	REAR EXTENSION FROM 62T2 INSERT ONLY INCH (MM)
Pin	618163005	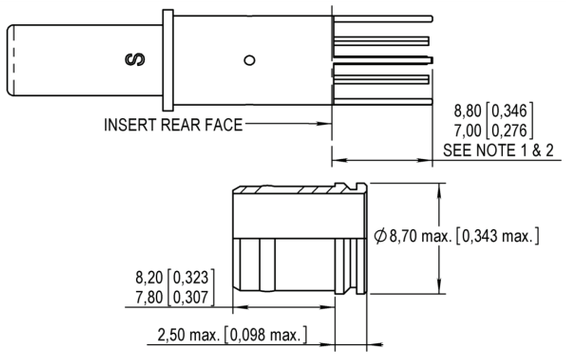	0.275/0.347 (7.00/8.80)	0.297/0.347 (7.55/8.80)	0.199/0.270 (5.05/6.85)
Pin	618164002	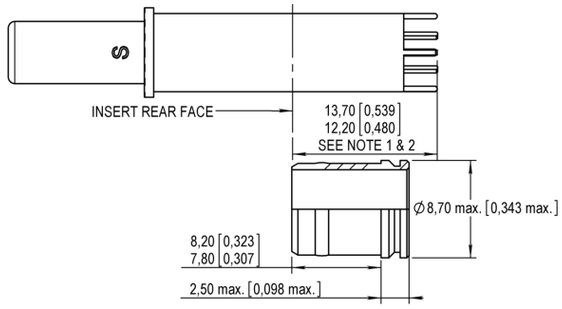	0.480/0.540 (12.20/13.70)	0.098/0.157 (2.50/4.00)	0.403/0.463 (10.25/11.75)
Pin	618164003	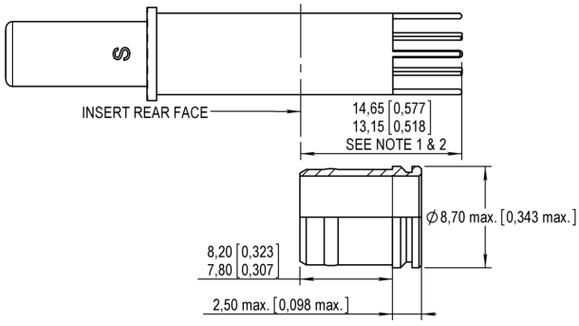	0.518/0.577 (13.15/14.65)	0.234/0.258 (5.95/6.55)	0.441/0.500 (11.20/12.70)

Notes

1. Non-environmental size 8 pin contacts are delivered with an alignment boot (p/n: 618920) to reduce the play at the contact extremity.
2. This alignment boot protrudes 2.5 mm max from the rear face of the insert; these 2.5 mm are taken into account in the dimensions listed above.

Introduction

ACCESSORIES

FILLER PLUGS

CAVITY SIZE	FILLER PLUG P/N	COLOR
22	620920 + 620926	Black
20	620921	Red
16	620922	Blue
12	620923	Yellow
5	618910 for Pin 618912 for Socket	White
8	618911 for Pin 618913 for Socket	Red

SEALING PLUGS

CAVITY SIZE	SEALING PLUG P/N	COLOR
22	616910	Black
20	616911	Red
16	616912	Blue
12	616913	Yellow
5	618915	White
8	618911 + 618913 + 618915	Red

CAVITY REDUCERS

The cavity reducers are not removable from the insert once installed. They are made of copper alloy and are nickel plated to allow contact cavity grounding.

CAVITY REDUCER TYPE	PART NUMBER
From Pin Size 8 to Size 12	Environmental: 618940001 Non-Environmental: 618940
From Socket Size 8 to Size 12	Environmental: 618941001 Non-Environmental: 618941

OUTER DIAMETER BACKSHELLS

Backshells are made of aluminium alloy and are cadmium yellow chromate plated. To order one complete backshell you must order separately an EMI backshell plus a combination of backshell terminations (i.e. one complete backshell for cavity A = 4x 618802011 + 1x 618802010 + 1x 618801002)

DESCRIPTION	PART NUMBER
EMI Backshell for Cavities A, C and E	618801002
EMI Backshell for Cavities B, D and F	618800002
Backshell Termination	618802010
Backshell Blank Termination	618802011

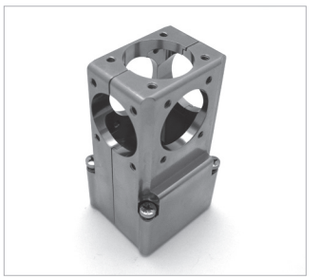

Introduction

DUST CAPS

DESCRIPTION	PART NUMBER
Conductive Dust Cap for Receptacle Shell	618953001
Conductive Dust Cap for Plug Shell	618953002
Non Conductive Dust Cap for Plug Shell	618953

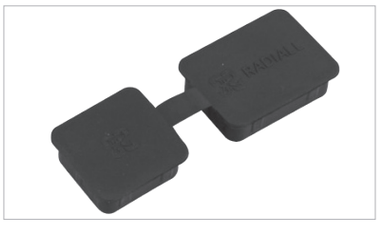

O-RING FOR INSERTS

DESCRIPTION	PART NUMBER
O-Ring for Inserts for A,C and E Cavities	618953020
O-Ring for Inserts for B,D and F Cavities	618953021

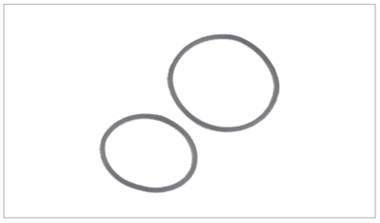

COUPLING SEALS

DESCRIPTION	PART NUMBER
Coupling Seals for A,C and E Shell Cavities	618953010
Coupling Seals for B,D and F Shell Cavities	618953011

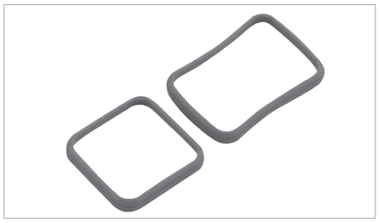

EMI SPRING

DESCRIPTION	PART NUMBER
Kit Made of One EMI Spring for A,C and E Shell Cavities and of One EMI Spring for B, D and F	618810
EMI Spring for A,C and E Shell Cavities	618810001
EMI Spring for B,D and F Shell Cavities	618810002

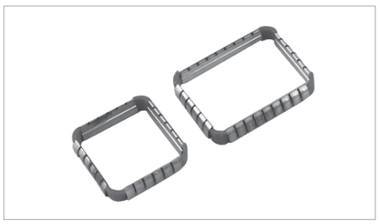

DUMMY INSERTS

- **MPXE10:** dummy insert for A, C and E shell cavities
- **MPXE20:** dummy insert for B, D and F shell cavities

POLARIZATION KIT & SCREWS

A kit of 2 screws that are used to fix the polarization posts or keys retention plate is available under P/N: 618985

A polarization kit for receptacle is P/N 618811002 and for plug it is P/N 618811001. Torque is 0.7 N.m

Dimensions

PLUG & RECEPTACLE OVERVIEW

The table below gives A and B dimension values (A and B = distance between the front flange of the connector and the rear face of the insert.

See drawings pages 6-35 to 6-40 for A and B description.

PLUG

INSERT DESCRIPTION	A AND/OR B DIMENSION FOR ENVIRONMENTAL PLUG INCH (MM)	A AND/OR B DIMENSION FOR NON-ENVIRONMENTAL PLUG INCH (MM)
60, T6, 11C2, 34 C12T6, 24, 35, 47T2,13T4 6T4, 11T2, 25, 20T4, 20Q4, Q6, Q11	0.386/0.449 (9.80/11.40)	No Rear Extension of Inserts from Shell
150, 100	0.228/0.295 (5.80/7.50)	
62T2, 68Q4	A: Signal Contacts 0.228/0.295 (5.80/7.50) B: Power Contacts 0.468/0.512 (11.90/13.00)	
70C12, 126, 118Q2	A: Signal Contacts 0.228/0.295 (5.80/7.50) B: Power Contacts 0.386/0.449 (9.80/11.40)	

RECEPTACLE

INSERT DESCRIPTION	A AND/OR B DIMENSION FOR ENVIRONMENTAL RECEPTACLE INCH (MM)	A AND/OR B DIMENSION FOR NON-ENVIRONMENTAL RECEPTACLE INCH (MM)
60, T6, 11C2, 34 C12T6, 24, 35, 47T2, 13T4 6T4, 11T2, 25, 20T4, 20Q4, Q6, Q11	1.610/1.657 (40.90/42.10)	1.275/1.313 (32.40/33.35)
150, 100, 126	1.441/1.492 (36.60/37.90)	1.171/1.215 (29.75/30.85)
62T2, 68Q4, 118Q2	A: Signal Contacts 1.441/1.492 (36.60/37.90) B: Power Contacts 1.512/1.557 (38.40/39.55)	1.171/1.215 (29.75/30.85)
70C12	1.457/1.518 (37/38.55)	

Dimensions

SHELL 2 DIMENSIONS – RECEPTACLE

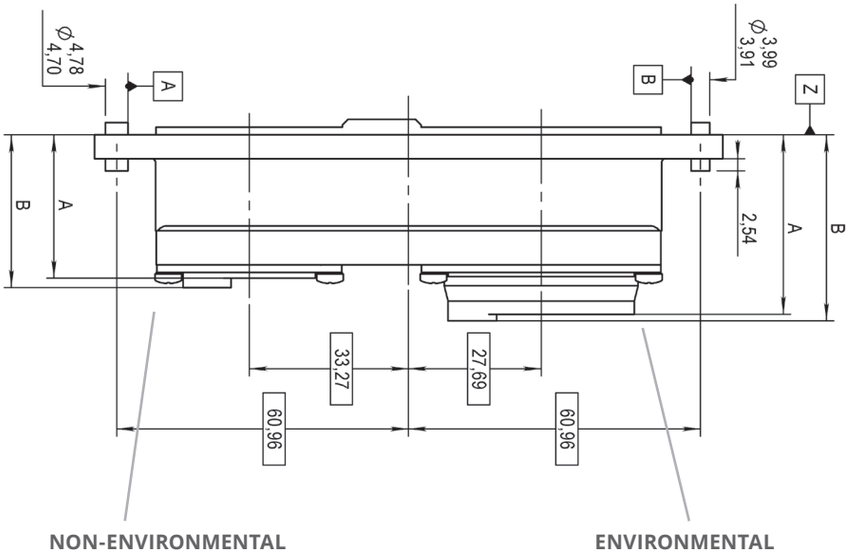

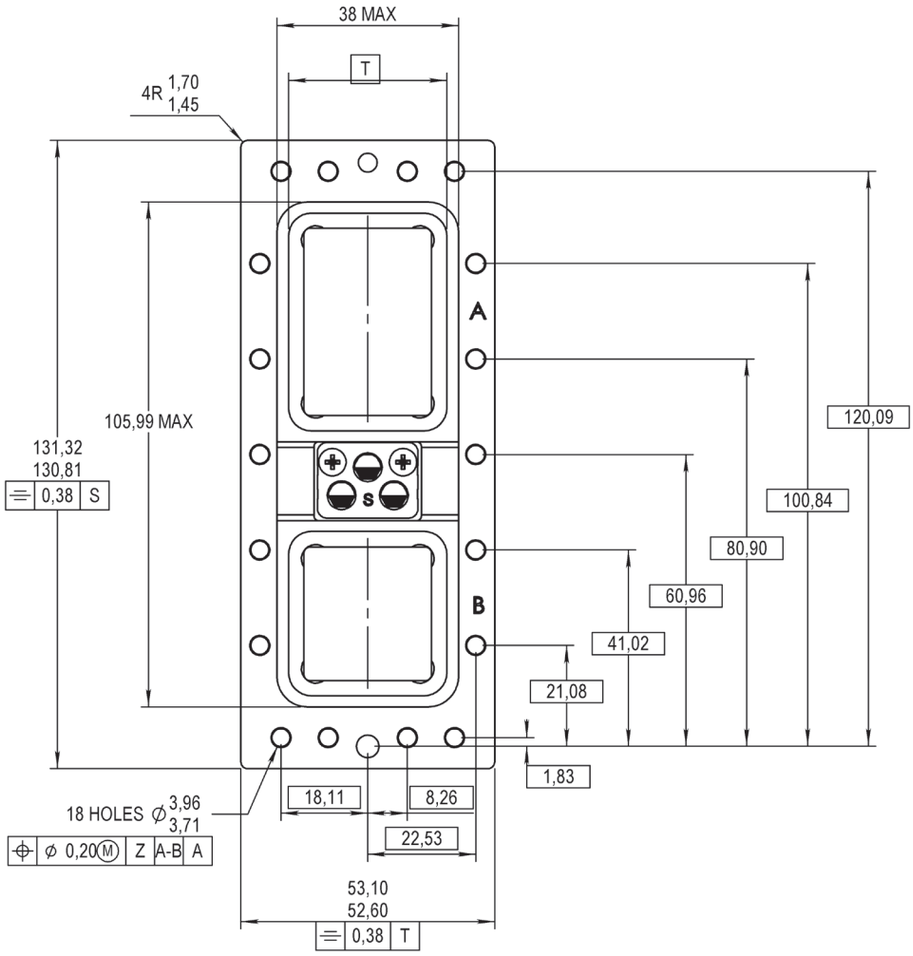

Dimensions

SHELL 2 DIMENSIONS – PLUG

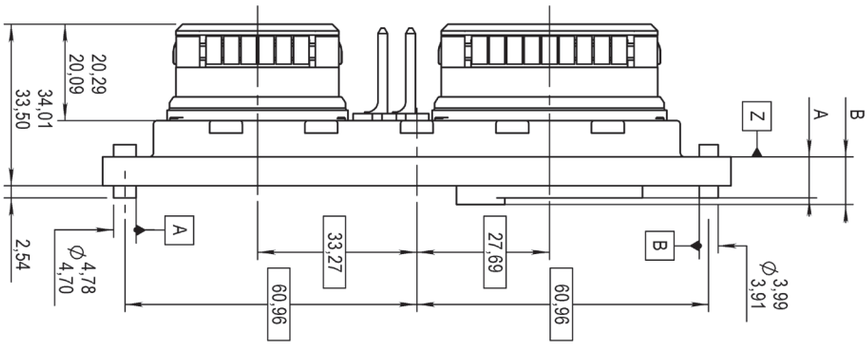

NON-ENVIRONMENTAL ENVIRONMENTAL

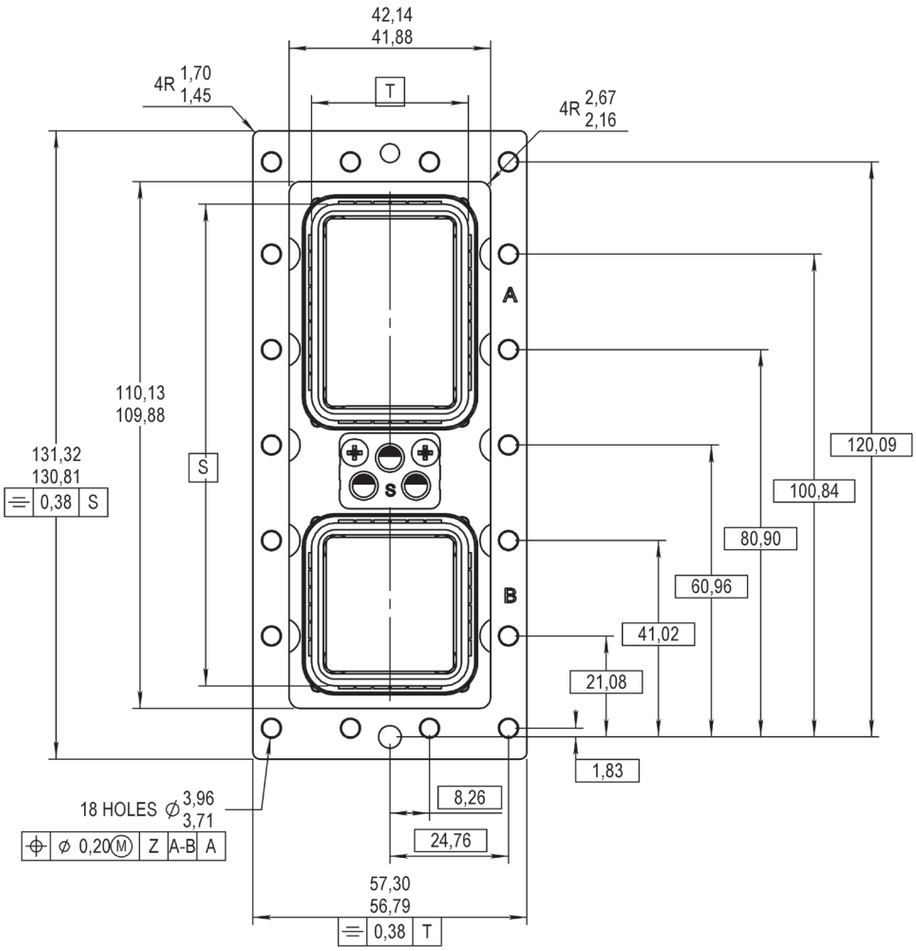

Dimensions

SHELL 3 DIMENSIONS – RECEPTACLE

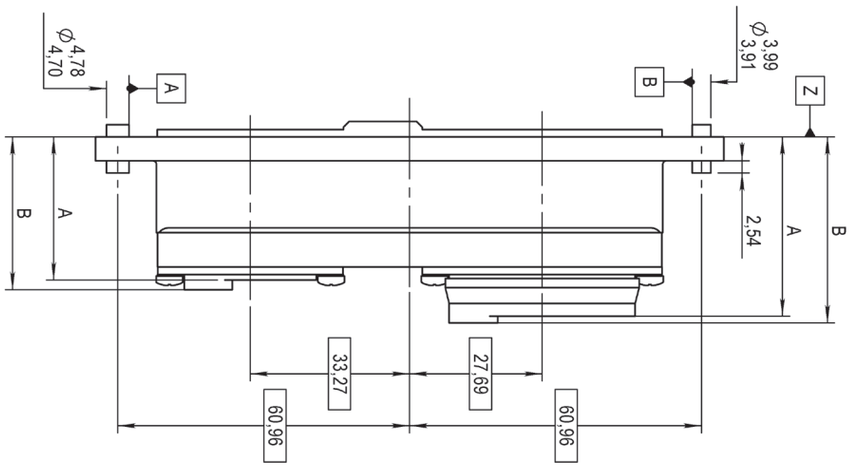

NON-ENVIRONMENTAL ENVIRONMENTAL

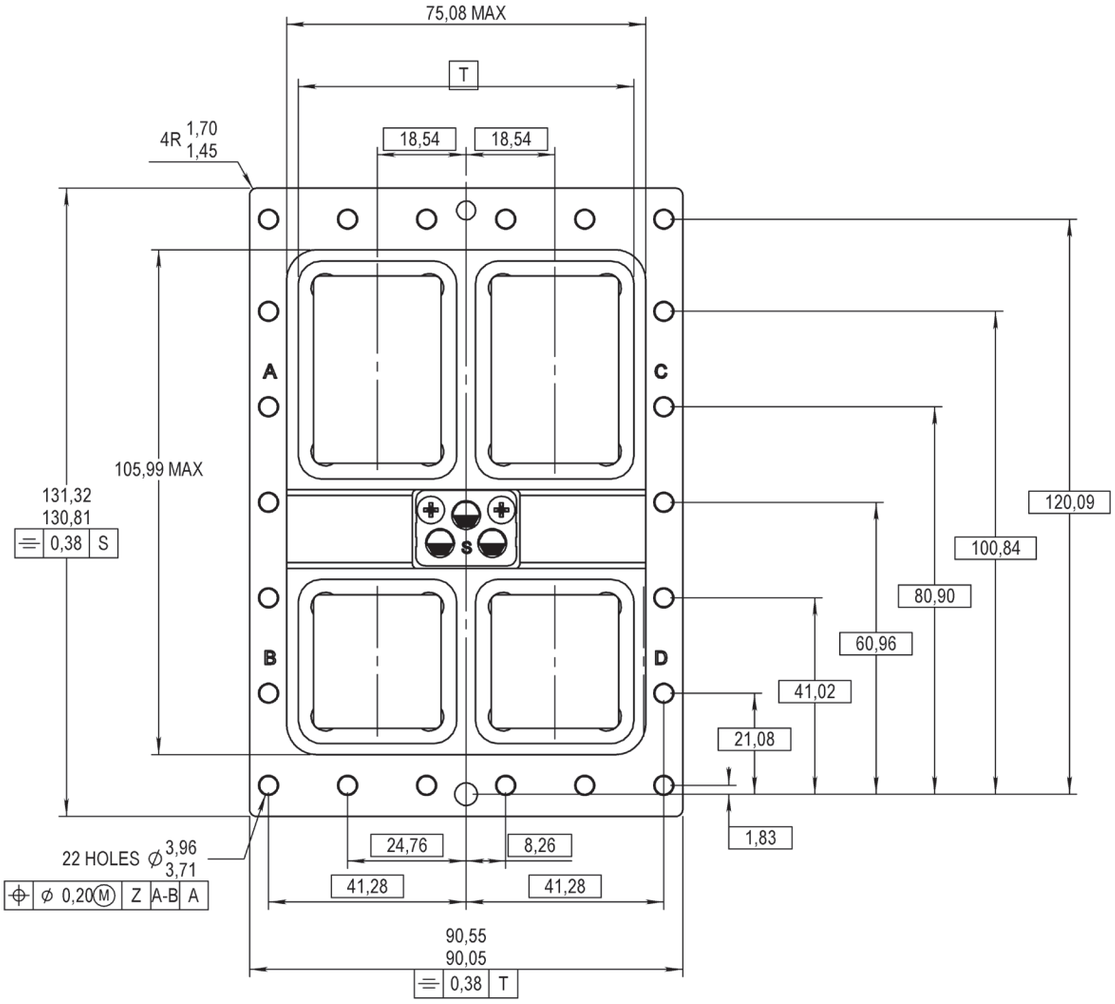

Dimensions

SHELL 3 DIMENSION – PLUG

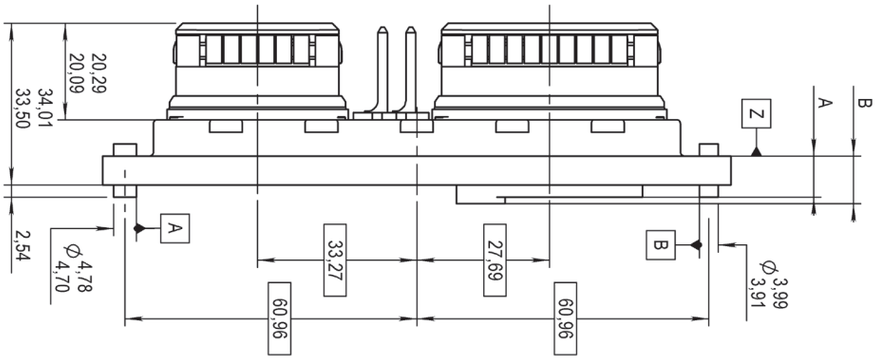

NON-ENVIRONMENTAL ENVIRONMENTAL

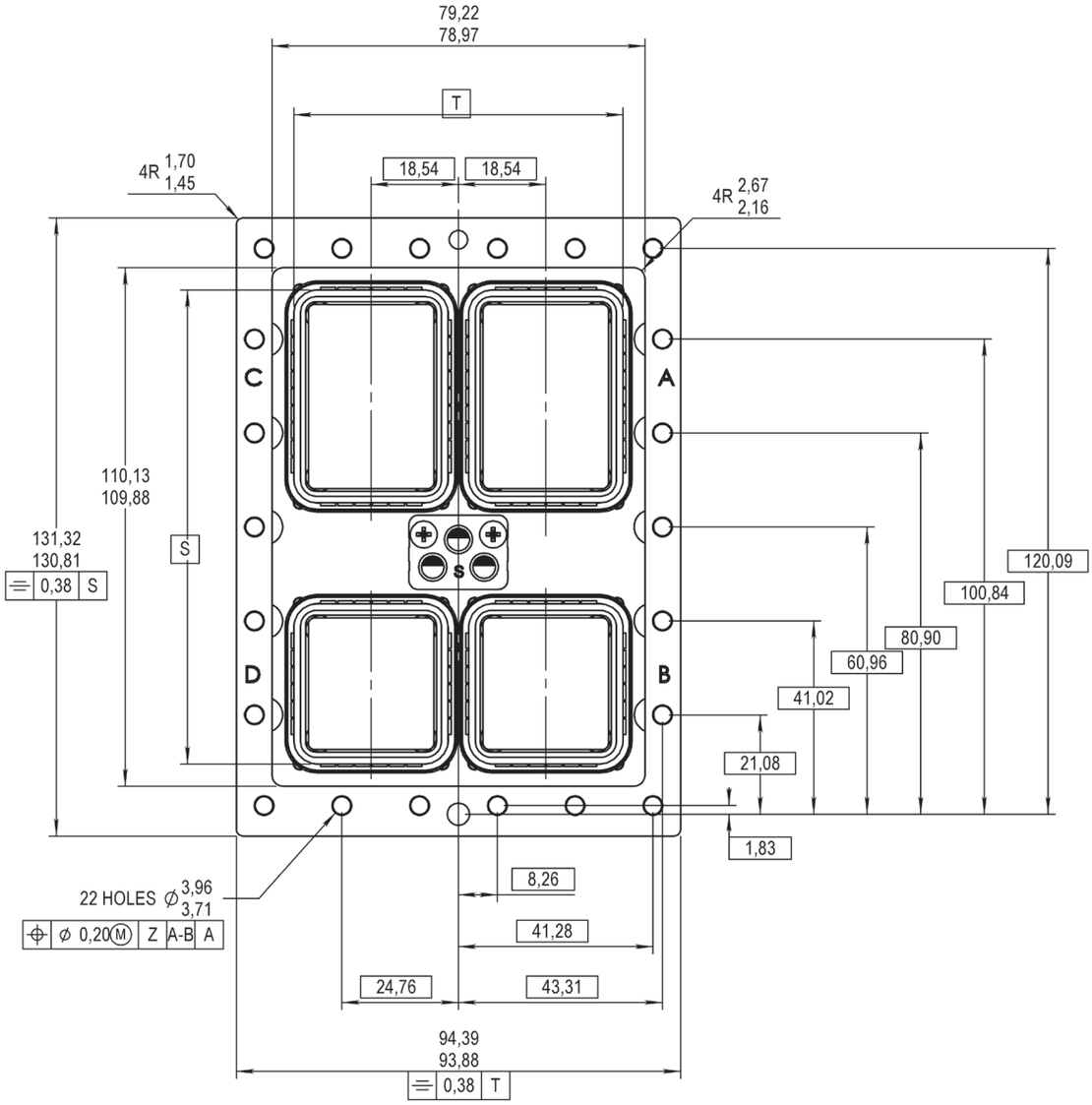

Dimensions

SHELL 4 DIMENSIONS – RECEPTACLE

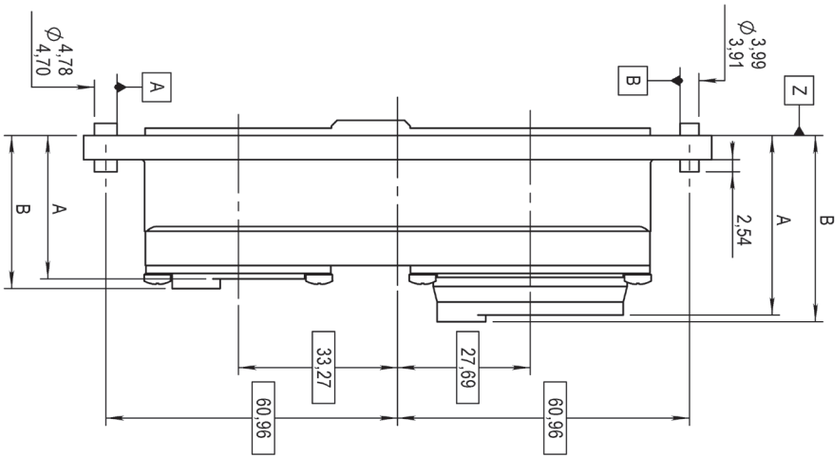

NON-ENVIRONMENTAL ENVIRONMENTAL

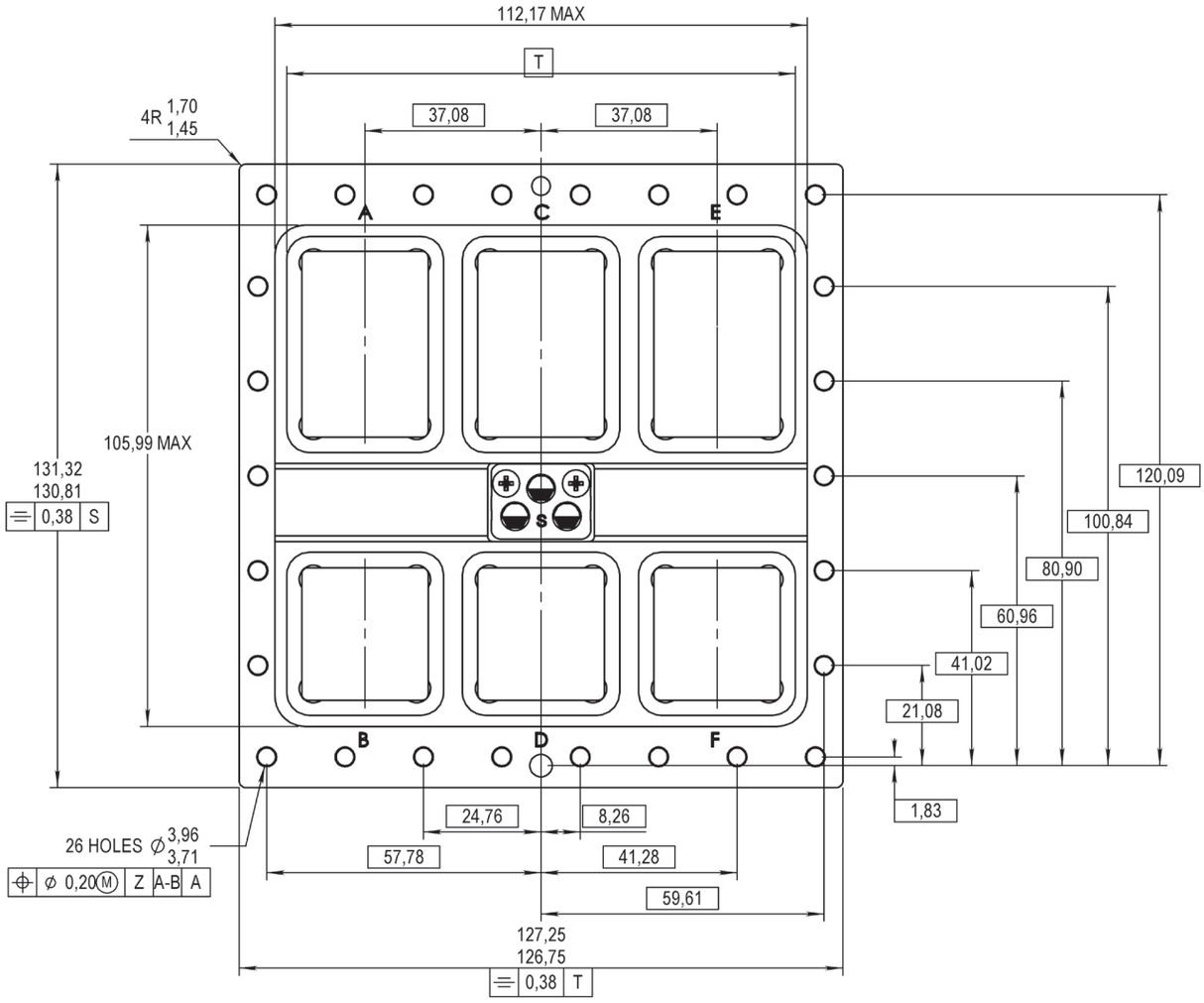

Dimensions

SHELL 4 DIMENSIONS – PLUG

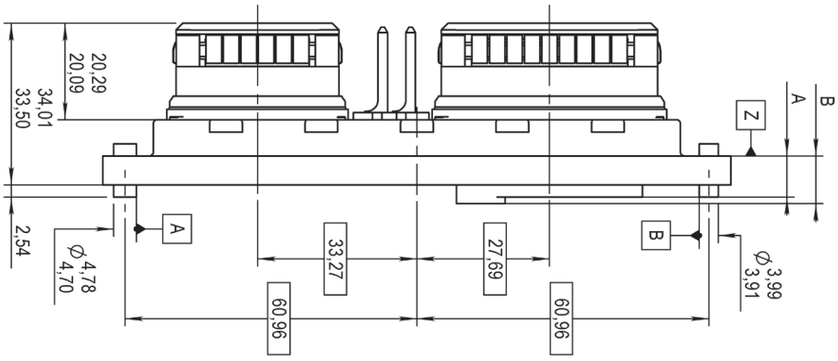

NON-ENVIRONMENTAL ENVIRONMENTAL

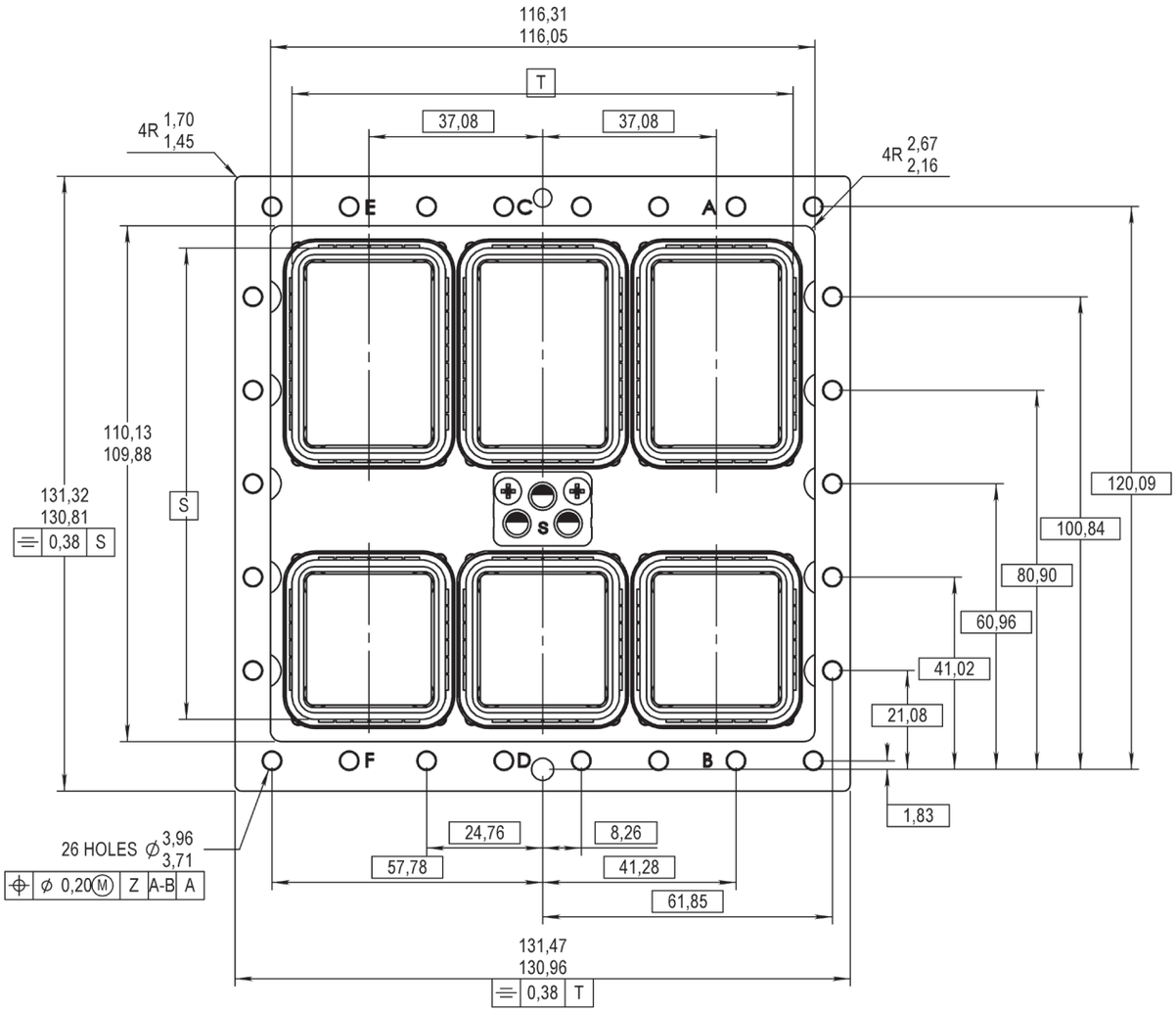

Dimensions

RACK PLUG PANEL CUT-OUT

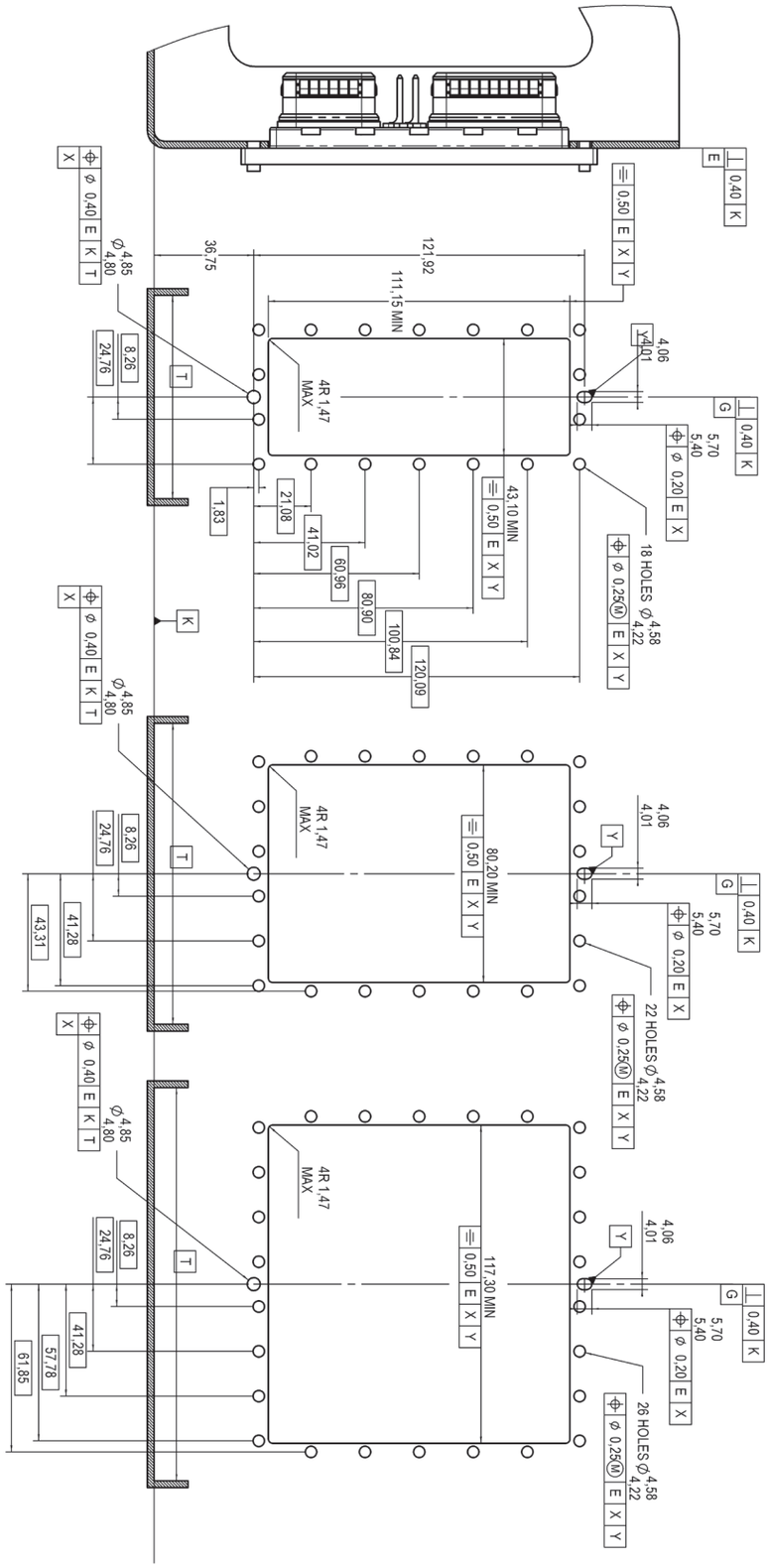

Dimensions

EQUIPMENT RECEPTACLE PANEL CUT-OUT

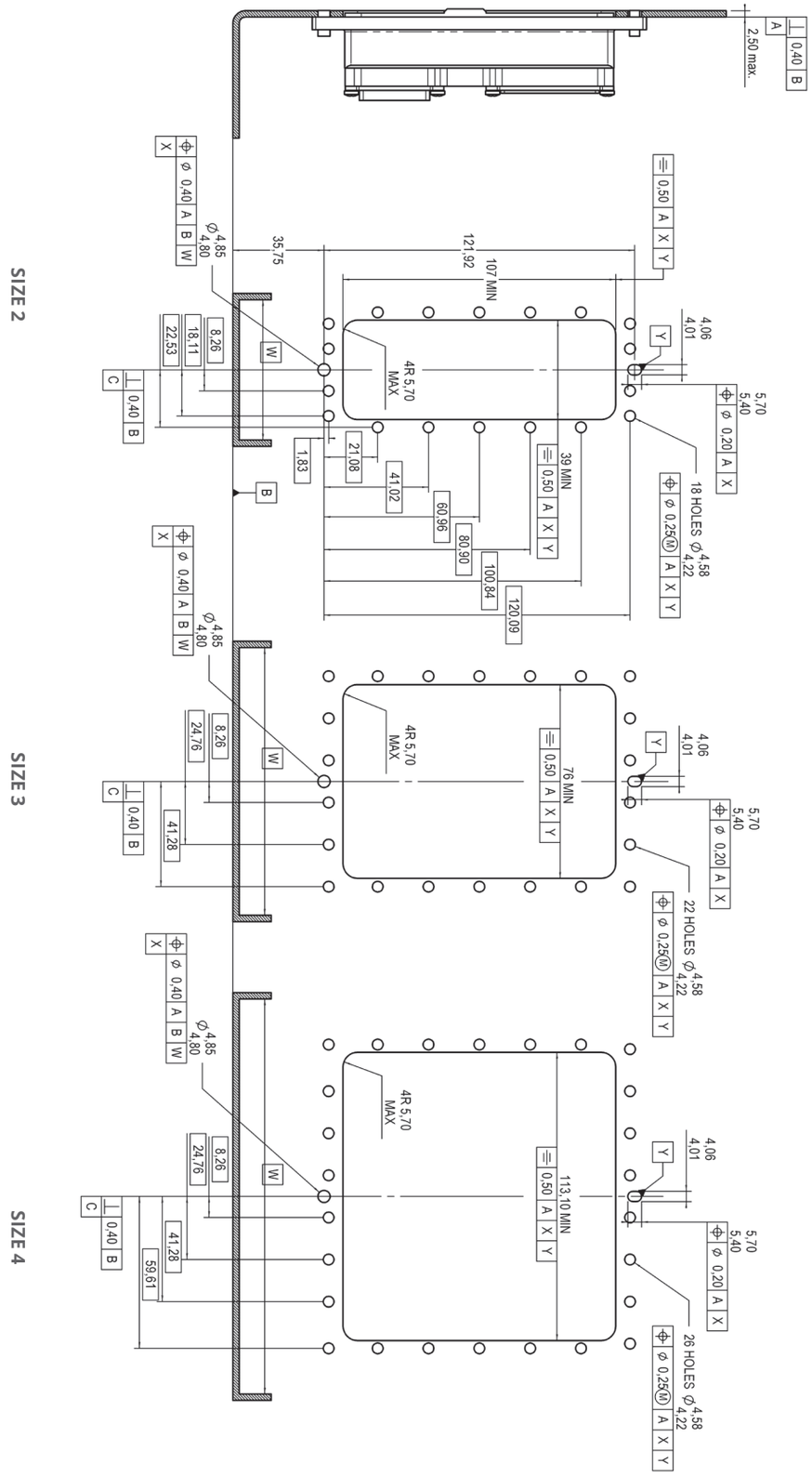

DSX SERIES

SAE AS81659, Arinc 404

Section 7 Table of Contents

INTRODUCTION

Introduction ..... 7-2 to 7-3
Application 7-3

DSX-SAE AS81659

Product Overview 7-4
Technical Characteristics ..... 7-5 to 7-6
Electrial Characteristics 7-5
Mechanical & Environmental Characteristics 7-5
Materials 7-6
Masses 7-6
How To Order 7-7
Contact Arrangement ..... 7-8 to 7-10
Modification Code ..... 7-11 to 7-16
Polarization Code 7-17
Polarization Code Table ..... 7-17 to 7-20
Contacts ..... 7-21 to 7-28
Signal & Power Contacts 7-21
Thermocouple Contacts 7-21
Contacts with PC Tail 7-22
Contacts with Wire Wrap Post 7-23
Coaxial Crimp Contacts ..... 7-23 to 7-25
Concentric Twinax Crimp Contact 7-26
Triax Crimp Contacts 7-26
Triax Contact with PC Tail 7-27
Fiber Optic Contacts & Accessories 7-28
Accessories ..... 7-28 to 7-30
Dimensions ..... 7-31 to 7-34
Panel Cut-Out 7-35
Cross Reference ..... 7-36 to 7-40

DSX-F

How To Order 7-41
Contacts 7-42
Contacts with PC Tail 7-42
Contacts with Wire Wrap Post 7-42
Coaxial Crimp Contacts 7-42

DSX-DATA BUS

How To Order 7-43
Technical Characteristics 7-43
Contact Arrangment 7-44
Dimensions ..... 7-45 to 7-46
Twinax Contacts 7-46

DSX-ARINC 404 SHELL TYPE B

How To Order 7-47
Technical Characteristics 7-48
Materials 7-48
Electrical 7-48
Mechanical & Environmental 7-48
Contact Arrangments ..... 7-49 to 7-50
Contacts ..... 7-51 to 7-54
Signal & Power Crimp Contacts 7-51
Contacts with PC Tail 7-51
Contacts with Wire Wrap Post 7-52
Solder Cup Contacts 7-52
Thermocouple Contacts 7-53
Fiber Optic Contacts 7-53
Coaxial Crimp Contacts ..... 7-53 to 7-54
Accessories 7-54
Dimensions ..... 7-55 to 7-56

DSX-EMI/RFI

Introduction 7-57
Part Numbering 7-57
Technical Characteristics 7-57
Materials 7-57

DSX-ARINC 404 SHELL TYPE A

Technical Characteristics 7-58
Electrial Characteristics 7-58
Mechanical & Environmental Characteristics 7-58
Materials 7-58
How To Order 7-59
Contact Arrangement 7-59
Modification Code 7-60
Contacts 7-61
Accessories 7-61
Dimensions 7-61
Panel Cut-Out 7-61
Tools 7-62

INTRODUCTION

The Radiall DSX rack and panel series are multipin rectangular connectors used to electrically interface avionics equipment to equipment rack. Usually the plug is installed on the avionics rack and the receptacle on the equipment box. The mated locking mechanism is provided for the equipment and cabinet and is not a part of the connector pair.

These connectors are widely used in applications such as:

- Commercial/military aircraft and helicopters
- Radar systems
- Power circuits
- In-flight electronic instrumentation
- Flight simulators, etc.

The following versions are offered:

- **DSX-SAE AS81659:** connectors conforming to SAE AS81659 including connectors listed on the QPL81659
- **DSX-ARINC 404 Shell Type B:** connectors conforming to ARINC 404 shell type B-polarized shells
- **DSX-ARINC 404 Shell Type A:** connectors conforming to ARINC 404 shell type A-single shell (without polarization)
- **DSX-F:** connectors for front release front removable contacts (receptacle only)
- **DSX-DATA BUS:** connectors for interconnection of multiplexed digital links
- **DSX-EMI/RFI:** shielded connectors

DSX-SAE AS81659

These connectors fully conform to SAE AS81659 specifications and are listed on the associated Qualified Product List. They are available in four shell sizes (1, 2, 3 and 4) which can respectively accept 1, 2, 3 and 4 inserts. Inserts are offered in various contact arrangements accommodating rear release rear removable signal (size 22), power (sizes 5, 12, 16 and 20HD), coaxial (sizes 1, 3, 5, 7, 9 and 15), concentric twinax (sizes 5 and 9), triax (sizes 5 and 9) contacts in crimp, wire wrap or PC tail termination. Radiall's 29504 fiber optic termini are also available. Both environmental and non-environmental connectors are offered.

Mismating is prevented by a polarizing system which provides 216 polarizing positions. For military part numbers, applicable polarizing positions range goes from 00 through 99 only.

DSX-ARINC 404 SHELL TYPE B

Arinc 404 shell type B are the commercial version. Here are the commercial features compared to the military version:

- They use both size 20HD and size 20 contacts.
- They are non-environmental. Inserts are fitted with a rubber separator on the back of their wiring which does not provide sealing but provides wire protection.
- Removable size 5 and 9 coaxial contacts are not interchangeable with those of the military type.
- Insert retention plate is yellow anodized instead of blue anodized on the military version.

DSX-ARINC 404 SHELL TYPE A

DSX-ARINC 404 shell type A connectors are only available in shell size 1. They use ARINC 404 shell type B inserts; only one insert can be installed in the connector shell. Shell type A has no polarization system, mismating is prevented by keystone shaped shells. DSX-ARINC 404 shell type A connectors cannot be fitted with any backshell.

Introduction

DSX-F

DSX-F receptacle connectors are available in four shell sizes (1, 2, 3 and 4) and are designed to be fitted with front release front removable contacts offered in pc tail and wire wrap termination. Inserts are offered with or without an interfacial seal (in both cases they are not and are fitted with a separator) and are available in the following contact arrangements: 106, 67, 57, 45, 40, 33C4, 26.

DSX-F connectors are fully intermateable with connectors of the ARINC 404 shell type B and SAE AS81659 versions.

DSX-DATA BUS

These connectors have been designed to ensure the interconnection of multiplexed digital links used in military equipment.

DSX-EMI/RFI

In response to the continuing development of electronic systems used in ever harsher environments, these connectors have been designed to improve the shielding effectiveness against electromagnetic and radio frequency interferences (EMI/RFI) as well as electromagnetic pulses (EMP).

APPLICATIONS

These connectors are used to form the electrical interface between avionics equipment to rack equipment.

© Eurocopter/photo Patrick PENNA

DSX-SAE AS81659

PRODUCT OVERVIEW

Detailed view of the various parts of this series connector.

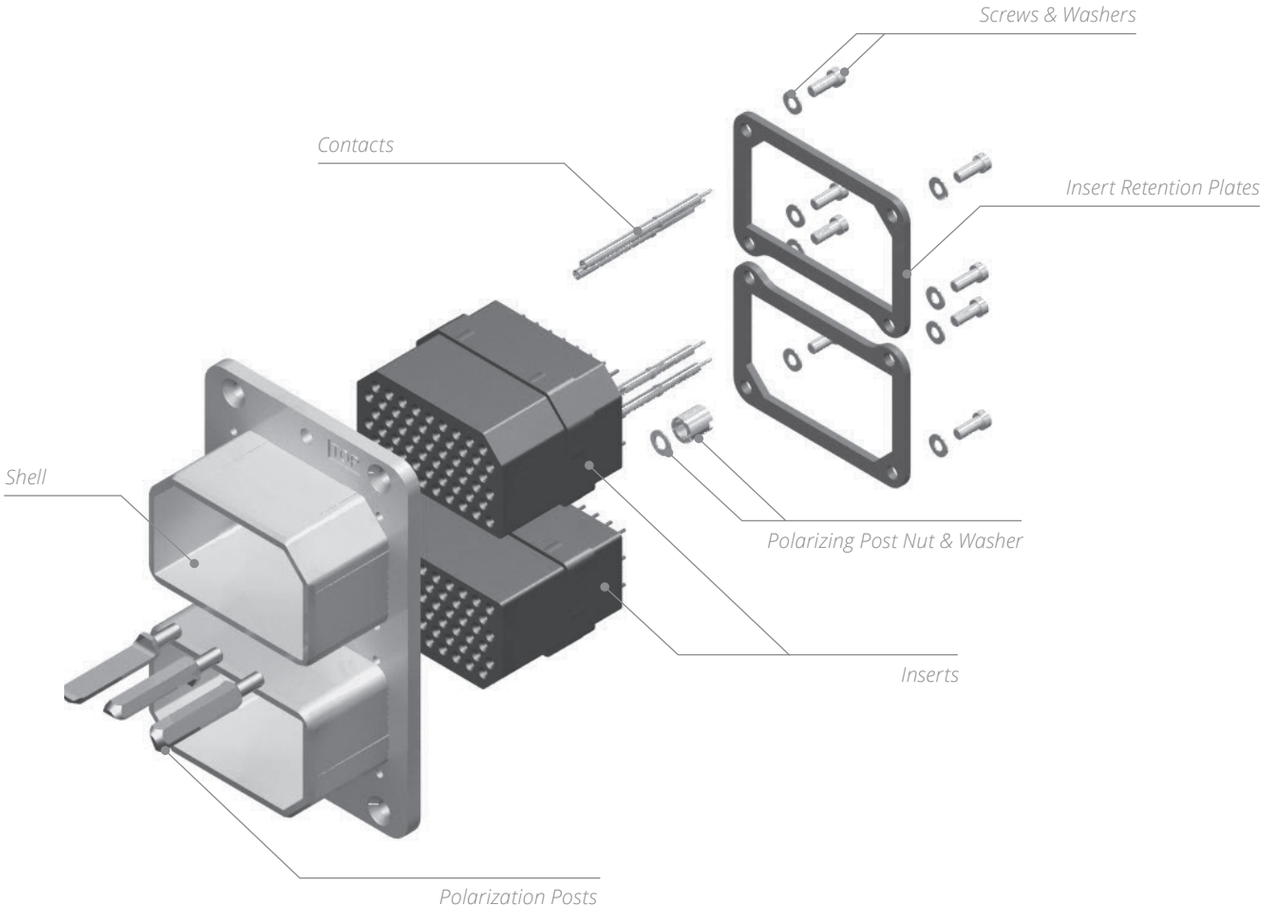

DSX-SAE AS81659

TECHNICAL CHARACTERISTICS

ELECTRICAL

- **Magnetic Permeability:** <2 µ
- **Insulation Resistance:** >5,000 MΩ
- **Dielectric Withstanding Voltage:** See Contact Arrangement on pages 7-8 to 7-10
- **Contact Resistance:** According to Requirements of SAE AS39029

COAX CONTACTS ELECTRICAL CHARACTERISTICS

- **Nominal Impedance:** 50 Ω VSWR
  - Sizes 5, 7 and 9: 1.3 from DC to 1,500 MHz
  - Sizes 1 and 3: 1.3 from DC to 5,000 MHz

CONTACT SIZE	AWG	CROSS SECTION MM2 (SQ.IN)	MIN. OUTSIDE DIA. MM (INCH)	MAX. OUTSIDE DIA. MM (INCH)	MAX CURRENT (A)
22	22	0.38 (0.015)	0.76 (0.030)	1.4 (0.055)	5
	24	0.21 (0.008)			3
	26	0.14 (0.006)			2
20HD	20	0.60 (0.024)	1 (0.039)	1.8 (0.071)	7.5
	22	0.38 (0.015)			5
	24	0.21 (0.008)			3
16	16	1.34 (0.053)	1.70 (0.067)	2.6 (0.102)	13
	18	0.93 (0.037)			10
	20	0.60 (0.024)			7.5
12	12	3.18 (0.125)	2.4 (0.094)	3.4 (0.134)	23
	14	1.91 (0.075)			17
	16	1.34 (0.052)			13
For Cavity 5	8	9.00 (0.354)	3.4 (0.134)	6.48 (0.255)	46
	10	5.00 (0.197)			33
	12	3.18 (0.125)			23
	14	1.91 (0.075)			17

MECHANICAL & ENVIRONMENTAL

- **Temperature Range:** -65 °C (-85 °F)/+125 °C (+257 °F)
- **Temperature Life:** 1,000 hours at +125 °C (+257 °F)
- **Salt Spray:** EIA 364-26 (MIL-STD-1344A Method 1001.1 Test Condition B (48 hours))
- **Altitude Moisture Injection:** Insulation Resistance > 100 M Ω altitude 50,000 ft
- **Fluid Resistance:** Resistance to 20 hours Immersion in Fluids MIL PRF 5606 & MIL PRF 23699
- **Durability:** 500 Matings and Unmating Cycles
- **Vibration:** EIA 364-28 (MIL-STD-1344A Method 2005 Test Condition IV (20 g–10-2,000 Hz))
- **Shock:** EIA 364-27 (MIL-STD-1344A Method 2004 Test Condition A (50 g -11 ms–half sine))
- **Mating Force:** < 200 N (45 lbs) per Insert
- **Insert Retention Force:** > 534 N (120 lbs) in each Direction
- **Contact Retention Force:** Max Axial Displacement = 0.3 mm (0.012 in.)

CONTACT SIZE	22	20HD	16	12
Axial Load N (lbs)	66 N (15)	89 N (20)	111 N (25)	133.5 N (30)

DSX-SAE AS81659

TECHNICAL CHARACTERISTICS

MATERIALS

DESCRIPTION	MATERIAL	PLATING
Shell	Aluminium Alloy	Cadmium Yellow Chromate [1]
Insert	Thermosetting Resin	-
Metallic Insert	Aluminium Alloy	Cadmium Clear Chromate [1]
Interfacial Seal & Grommet	Silicone Rubber	-
Retention Clip	Copper Alloy	-
Contact	Copper Alloy	Gold Over Nickel Under Plate
Insert Retention Plate	Aluminium Alloy	Blue Snodised [1]
Polarizing Posts	Stainless Steel	-
Polarizing Keys	Zinc Alloy	Cadmium Yellow Chromate
Polarizing Keys Retention Plate	Aluminium Alloy	Cadmium Yellow Chromate [1]
Screws, Washers, Clinch-Nuts	Corrosion Resistant Steel	-
Sealing Plugs & Filler Plugs	PTFE	-
Sealing Boots & Sleeves	Fluorinated Silicon Rubber	-
Sealing Bushing	PEI	-
Junction Shells	Aluminium Alloy	Yellow Anodized or Nickel-Plated

MASSES (ESTIMATES)

DESCRIPTION	WEIGHT G (OZ)
Plug Shell Size 1	30 (1.05)
Plug Shell Size 2	45 (1.60)
Plug Shell Size 3	60 (2.15)
Plug Shell Size 4	85 (3)
Receptacle Shell 1	30 (1.05)
Receptacle Shell 2	50 (1.75)
Receptacle Shell 3	85 (3)
Receptacle Shell 4	115 (4.05)
Plastic Insert	20 (0.70)
Metallic Insert	35 (1.25)
Junction Shells	25 (0.88)

Notes

1. More platings are available, see descriptions in modification codes

DSX-SAE AS81659

HOW TO ORDER CONNECTORS

DSX

SERIES PREFIX

CLASS
N: Non-environmental (without grommet and interfacial seal)
E: Environmental (with grommet and interfacial seal)
T: Connector with interfacial seal on insert with protruding contacts only

SHELL SIZE
1: One gang shell
2: Two gang shell
3: Three gang shell
4: Four gang shell

SHELL TYPE
R: Receptacle shell
P: Plug shell

GROUNDING EMI/RFI
G: With grounding spring (only for plug connector)

TERMINATION STYLE [5]
X: Without contacts (for crimp contacts only)
S: Crimp [1]
V: Wire wrap two levels [4]
W: Wire wrap three levels [4]
Y: PC tail contact [4]

CONTACT ARRANGEMENT [2 & 5]
See available contact arrangements on pages 7-8 to 7-10

CONTACT TYPE [5]
S: Socket
P: Pin

GANG B

GANG C

GANG D

MODIFICATION CODE
See pages 7-11 to 7-16 for selection.
Modification code will help in choosing the appropriate plating for your application.

POLARIZATION CODE [3]
See pages 7-17 to 7-20 for selection.

Notes

Important Note: If you want to get connectors marked with the military part number (i.e. M81659/66A2-0083) you must order by using the military part number. Radiall part numbers qualified to SAE AS81659 versus military part numbers are listed from pages 7-36 to 7-40.

1. For reduced crimp barrel, thermocouple or fiber optic contacts, use code X and order contact separately.
2. For contact arrangements which include coax or quadrax contacts, use termination code X. Quadrax and coax contacts must be ordered separately.
3. Without polarization code the connector is delivered with the polarizing system unassembled. With polarization code 00: the connector is delivered without polarizing system. With polarization code from 01 to 216: the connector is delivered with polarization hardware assembled as defined by code. Polarization codes for connector qualified to SAE AS81659 are ranging from 00 to 99 only.
4. PC tail and wire wrap contacts must be used only with non-environmental version. PC tail and wire wrap contacts are delivered installed. For 67, 32C4 and 33C4 contact arrangements, size 16 contacts are delivered not installed and in crimp termination.
5. Gang A

DSX-SAE AS81659

CONTACT ARRANGEMENTS

Pin insert mating side shown

Class N for non-environmental insert
Class E for environmental insert
Class T for insert with interfacial seal only

INSERT NAME	NUMBER OF CONTACTS	DIELECTRIC WITHSTANDING VOLTAGE (DWV)	CLASS			INSERT NAME	NUMBER OF CONTACTS	DWV	CLASS		
			N	E	T				N	E	T
C5 [1]	5 × #5 (Power)	2,500 V–60 Hz This Insert is Available in Class N Only	✓	-	-	57 [1]	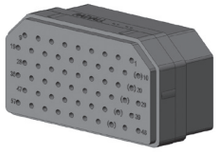 57 × #20 HD	1,500 V–60 Hz	✓	✓	✓
8	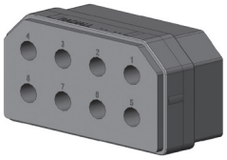 8 × #12	1,500 V–60 Hz	✓	✓	✓	67	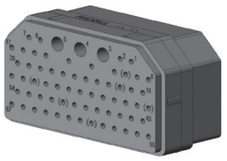 64 × #20 HD 3 × #16	1,000 V-60 Hz	✓	✓	✓
D8	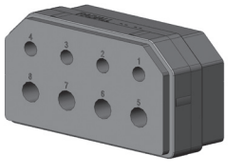 4 × #16 4 × #12	1,500 V–60 Hz	✓	✓	✓	106	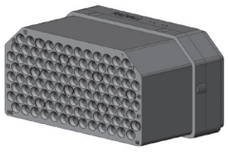 106 × #22	1,000 V-60 Hz	✓	✓	✓ [2]
26	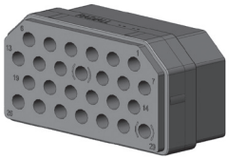 26 × #16	1,500 V–60 Hz	✓	✓	✓	40C1	1 × #5 (Coax) 39 × #20 HD	1,500 V–60 Hz	✓	✓	-
40	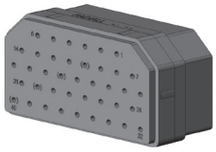 40 × #20 HD	1500V–60Hz	✓	✓	✓	40T1 [1]	1 × #5 (Coax) 39 × #20 HD	1,500 V–60 Hz Size 5 Contact Cavity Grounded to the Shell	✓	✓	-
45	45 × #20 HD	1,500 V–60 Hz	✓	✓	✓	32C2	2 × #5 (Coax) 30 × #20 HD	1,000 V-60 Hz	✓	✓	-

Notes

1. Contact arrangements are not referenced in the MS3157 and SAE AS81659 standards.
2. Class T insert are for pin contacts only except insert arrangement 106; 36C7 and 36T7 which are for socket contacts only.

DSX-SAE AS81659

Pin insert mating side shown

INSERT NAME	NUMBER OF CONTACTS	DWV	CLASS			INSERT NAME	NUMBER OF CONTACTS	DWV	CLASS		
			N	E	T				N	E	T
32T2 [1]	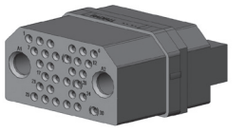 2 × #5 (Coax) 30 × #20 HD	1,000 V – 60 Hz Size 5 Contact Cavities Grounded to the Shell	✓	✓	-	36C7 [1]	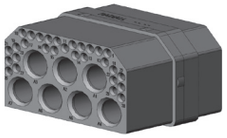 7 × #5 (Coax) 29 × #22	1,000 V – 60 Hz	✓	✓	✓ [2]
32C4	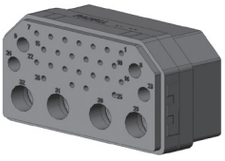 4 × #9 (Coax) 4 × #16 24 × #20 HD	1,500 V – 60 Hz	✓	✓	✓	36T7 [1]	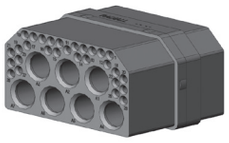 7 x #5 (Coax) 29 x #22	1,000 V – 60Hz Size 5 Contact Cavities Grounded to the Shell	✓	✓	✓ [2]
32T4 [1]	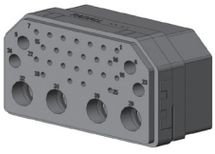 4 × #9 (Coax) 4 × #16 24 × #20 HD	1,500 V – 60 Hz Size 9 Contact Cavities Grounded to the Shell	✓	✓	-	MC2	2 × #1 (Coax)	This Insert is Metallic	✓	-	-
33C4	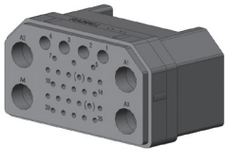 4 × #5 (Coax) 4 × #1625 × #20 HD	1,000 V – 60 Hz	✓	✓	✓	MC3	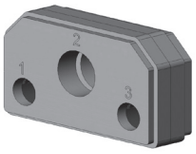 2 × #7 (Coax) 1 × #3 (Coax)	This Insert is Metallic	✓	-	-
33T4 [1]	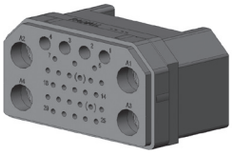 4 × #5 (Coax) 4 × #16 25 × #20 HD	1,000 V – 60 Hz Size 5 Contact Cavities Grounded to the Shell	✓	✓	✓	C8	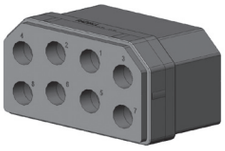 8 × #9 (Coax)	1,000 V – 60 Hz	✓	✓	✓

Notes

1. Contact arrangements are not referenced in the MS3157 and SAE AS81659 standards.

2. Class T insert are for pin contacts only except insert arrangement 106; 36C7 and 36T7 which are for socket contacts only.

DSX-SAE AS81659

Pin insert mating side shown

INSERT NAME	NUMBER OF CONTACTS	DWV	CLASS		
			N	E	T
T8*	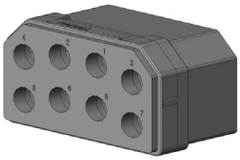 8 × #9 (Coax)	Size 9 Contact Cavities Grounded to the Shell. Pin Contact Available Only	✓	✓	✓
6CU	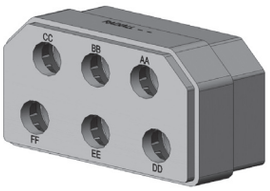 6 × #8 Quadrax	Size 8 Contact Cavities Grounded to the Shell. Non-Environmental Only	✓	✓	-
81C3	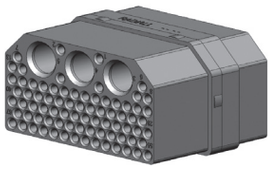 78 × # 22 3 × #5 (Coax)	1,000 V-60 Hz	✓ For Pin Contact Only	-	-
00*	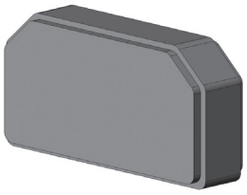	Dummy Insert	-	-	-

DSX-SAE AS81659

MODIFICATION CODE

Connectors can be front or rear mount. It should be noted that:

- There is only 4 mm between the connector flange when fully mated. Please note that the modification code and screw type should be selected accordingly.
- The modification code with floating eyelets can be mated with the fixed modification.

CODE	RECEPTACLE SHELL		PLUG SHELL	
00	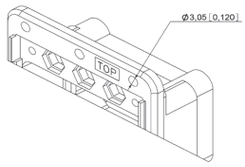	Sizes 1,2 and 3: 6 Holes Ø3,05 (0.120) Size 4: 10 Holes Ø3,05 (0.120)	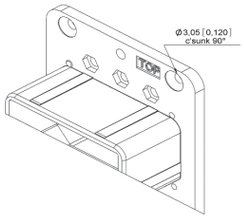	Sizes 1 and 2: 4 Holes Ø3,05 (0.120) c'sunk 90° Size 3: 6 Holes Ø3,05 (0.120) c'sunk 90° Size 4: 10 Holes Ø3,05 (0.120) c'sunk 90°
01	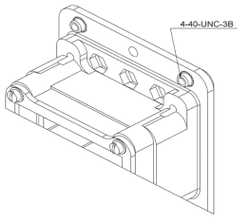	Sizes 1 and 2: 4 Clinch Nuts 4.40 UNC 3B Size 3: 6 Clinch Nuts 4.40 UNC 3B Size 4: 10 Clinch Nuts 4.40 UNC 3B	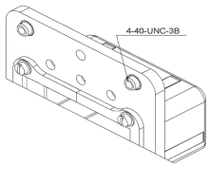	Sizes 1 and 2: 4 Clinch Nuts 4.40 UNC 3B Size 3: 6 Clinch Nuts 4.40 UNC 3B Size 4: 10 Clinch Nuts 4.40 UNC 3B
02	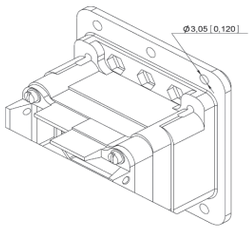	Sizes 1, 2 and 3: 6 Holes Ø3,05 (0.120) with Attaching Tabs for Radiall Backshell Not Available in Size 4	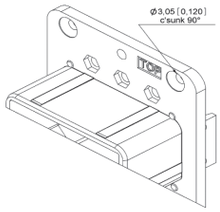	Sizes 1 and 2: 4 Holes Ø3,05 (0.120) c'sunk 90° with Attaching Tabs for Radiall Backshell Size 3: 6 Holes Ø3,05 (0.120) c'sunk 90° with Attaching Tabs for Radiall backshell Not Available in Size 4
03	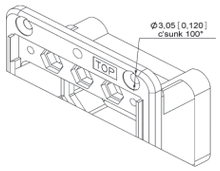	Sizes 1 and 2: 4 Holes Ø3,05(0.120) c'sunk 100° Size 3: 6 Holes Ø3,05(0.120) c'sunk 100° Size 4: 10 Holes Ø3,05(0.120) c'sunk 100°	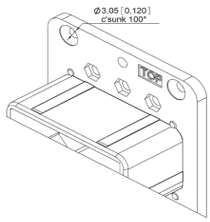	Sizes 1 and 2: 4 Holes Ø3,05(0.120) c'sunk 100° Size 3: 6 Holes Ø3,05(0.120) c'sunk 100° Size 4: 10 Holes Ø3,05(0.120) c'sunk 100°
04	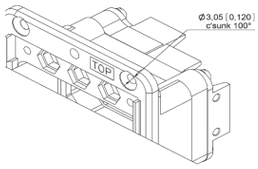	Sizes 1 and 2: 4 Holes Ø3,05(0.120) c'sunk 100° with Attaching Tabs for Radiall Backshell Size 3: 6 Holes Ø3,05(0.120) c'sunk 100° with Attaching Tabs for Radiall Backshell Not Available in Size 4	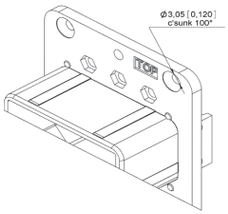	Sizes 1 and 2: 4 Holes Ø3,05(0.120) c'sunk 100° with Attaching Tabs for Radiall Backshell Size 3: 6 Holes Ø3,05(0.120) c'sunk 100° with Attaching Tabs for Radiall Backshell Not Available in Size 4

DSX-SAE AS81659

CODE	RECEPTACLE SHELL		PLUG SHELL	
05	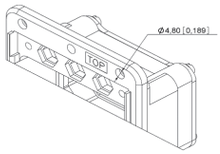	Sizes 1,2 and 3: 4 Holes Ø4,80 (0.189) Size 4: 10 Holes Ø4,80 (0.189)	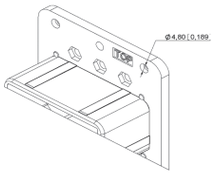	Sizes 1,2 and 3: 4 Holes Ø4,80 (0.189) Size 4: 10 Holes Ø 4,80 (0.189)
08	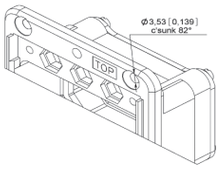	Sizes 1 and 2: 4 Holes Ø3,53 (0.139) c'sunk 82° Size 3: 6 Holes Ø3,53 (0.139) c'sunk 82°	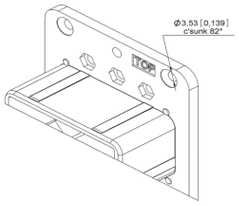	Sizes 1 and 2: 4 Holes Ø3,53 (0.139) c'sunk 82° Size 3: 6 Holes Ø3,53 (0.139) c'sunk 82°
12	-	-	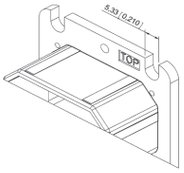	Sizes 1, 2 and 3: 4 Mounting Slots 5,33 (0.210) Wide
13	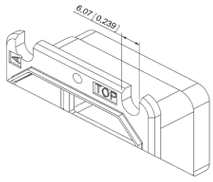	Sizes 1, 2 and 3: 4 Mounting Slots 6,07 (0.239) Wide	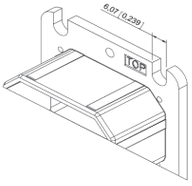	Sizes 1, 2 and 3: 4 Mounting Slots 6,07 (0.239) Wide
17	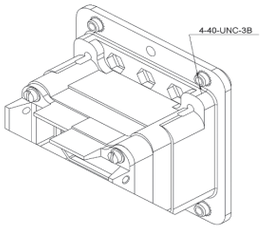	Sizes 1 and 2: 4 Clinch Nuts 4.40 UNC 3B with Attaching Tabs for Radiall Backshell Size 3: 6 Clinch Nuts 4.40 UNC 3B with Attaching Tabs for Radiall Backshell Not Available in Size 4	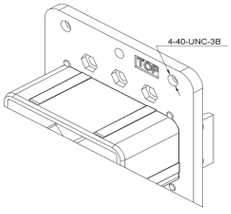	Sizes 1 and 2: 4 Clinch Nuts 4.40 UNC 3B with Attaching Tabs for Radiall Backshell Size 3: 6 Clinch Nuts 4.40 UNC 3B with Attaching Tabs for Radiall Backshell Not Available in Size 4
18	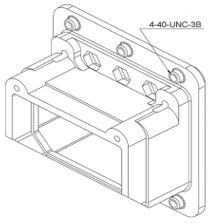	Sizes 1, 2 and 3: 6 Clinch Nuts 4.40 UNC 3B Not Available in Size 4	-	-

DSX-SAE AS81659

CODE	RECEPTACLE SHELL		PLUG SHELL	
19	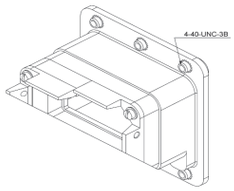	Sizes 1, 2 and 3: 6 Clinch Nuts 4.40 UNC 3B with Attaching Tabs for Radiall Backshell Not Available in Size 4	-	-
22	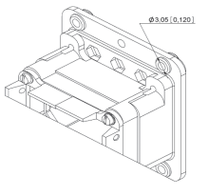	Sizes 1 and 2: 4 Floating Eyelets Ø3,05 (0.120) with Attaching Tabs for Radiall Backshell Size 3: 6 Floating Eyelets Ø3,05 (0.120) with Attaching Tabs for Radiall Backshell Not Available in Size 4	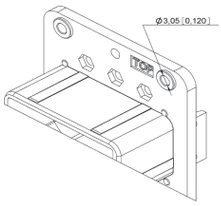	Sizes 1 and 2: 4 Floating Eyelets Ø3,05 (0.120) with Attaching Tabs for Radiall Backshell Size 3: 6 Floating Eyelets Ø3,05 (0.120) with Attaching Tabs for Radiall Backshell Not Available in Size 4
23	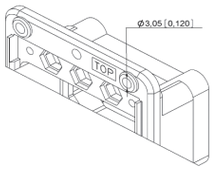	Sizes 1 and 2: 4 Floating Eyelets Ø3,05(0.120 Size 3: 6 Floating Eyelets Ø3,05 (0.120) Size 4: 10 Floating Eyelets Ø3,05 (0.120)	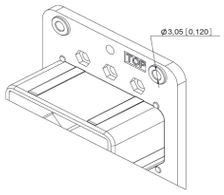	Sizes 1 and 2: 4 Floating Eyelets Ø3,05 (0.120) Size 3: 6 Floating Eyelets Ø3,05 (0.120) Size 4: 10 Floating Eyelets Ø3,05 (0.120)
24	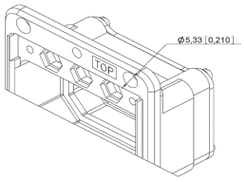	Sizes 1, 2 and 3: 6 Holes Ø5,33 (0.210)	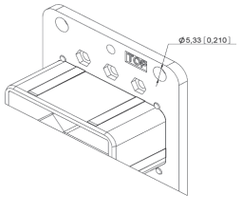	Sizes 1, 2 and 3: 6 Holes Ø5,33 (0.210)
26	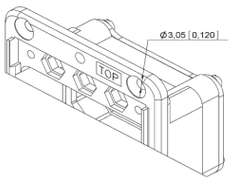	Sizes 1 and 2: 4 Holes Ø3,05(0.120) c'sunk 90° Size 3: 6 Holes Ø3,05(0.120) c'sunk 90° Size 4: 10 Holes Ø3,05(0.120) c'sunk 90°	-	-
33	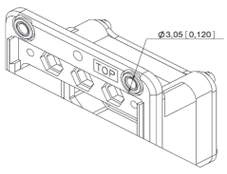	Sizes 1 and 2: 4 Flush Front Embedded Floating Eyelets Ø3,05 (0.120) Size 3: 6 Flush Front Embedded Floating Eyelets Ø3,05 (0.120) Size 4: 10 Flush Front Embedded Floating Eyelets Ø3,05 (0.120)	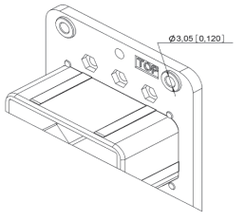	Sizes 1 and 2: 4 Flush Rear Embedded Floating Eyelets Ø3,05 (0.120) Size 3: 6 Flush Rear Embedded Floating Eyelets Ø3,05 (0.120) Size 4: 10 Flush Rear Embedded Floating Eyelets Ø3,05 (0.120)

DSX-SAE AS81659

CODE	RECEPTACLE SHELL		PLUG SHELL	
34	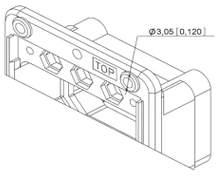	Sizes 1 and 2: 4 Flush Rear Embedded Floating Eyelets Ø3,05 (0.120) Size 3: 6 Flush Rear Embedded Floating Eyelets Ø3,05 (0.120) Size 4: 10 Flush Rear Embedded Floating Eyelets Ø3,05 (0.120)	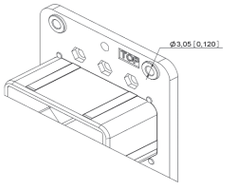	Sizes 1 and 2: 4 Flush Front Embedded Floating Eyelets Ø3,05 (0.120) Size 3: 6 Flush Front Embedded Floating Eyelets Ø3,05 (0.120) Size 4: 10 Flush Front Embedded Floating Eyelets Ø3,05 (0.120)
35	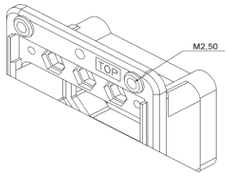	Sizes 1 and 2: 4 Flush Front Embedded Floating Eyelets M2.5 Threaded Size 3: 6 Flush Rear Embedded Floating Eyelets M2.5 Threaded	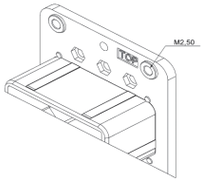	Sizes 1 and 2: 4 Flush Rear Embedded Floating Eyelets M2.5 Threaded Size 3: 6 Flush Rear Embedded Floating Eyelets M2.5 Threaded
36	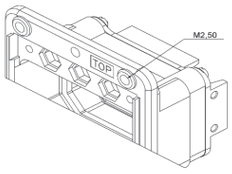	Sizes 1 and 2: 4 Flush Front Embedded Floating Eyelets M2.5 Threaded with Attaching Tabs for Radiall Backshell Size 3: 6 Flush Front Embedded Floating Eyelets M2.5 Threaded with Attaching Tabs for Radiall Backshell Not Available in Size 4	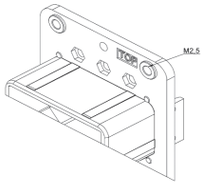	Sizes 1 and 2: 4 Flush Front Embedded Floating Eyelets M2.5 Threaded with Attaching Tabs for Radiall Backshell Size 3: 6 Flush Front Embedded Floating Eyelets M2.5 Threaded with Attaching Tabs for Radiall Backshell Not Available in Size 4
55	-	-	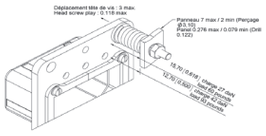	Sizes 1, 2 and 3: Spring Loaded Shell 6 Places
60	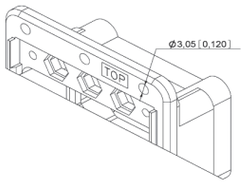	Similar to Modification Code 00 except that the Shell, Keys and Keys Retention Plate are Nickel-Plated.	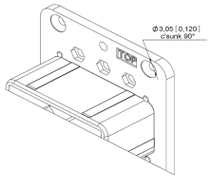	Similar to Modification Code 00 except that the Shell, Keys and Keys Retention Plate are Nickel-Plated.
61	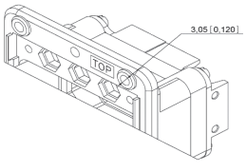	Similar to Modification Code 22 except that the Shell, Keys and Keys Retention Plate are Nickel-Plated. Not Available in Size 4	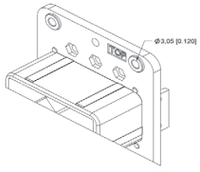	Similar to Modification Code 22 except that the Shell, Keys and Keys Retention Plate are Nickel-Plated. Not Available in Size 4

DSX-SAE AS81659

CODE	RECEPTACLE SHELL		PLUG SHELL	
62	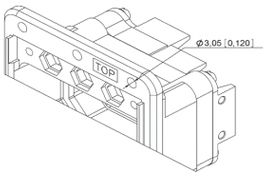	Similar to Modification Code 02 except that the Shell, Keys and Keys Retention Plate are Nickel-Plated. Not Available in Size 4	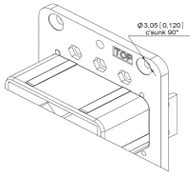	Similar to Modification Code 02 except that the Shell, Keys and Keys Retention Plate are Nickel-Plated. Not Available in Size 4
63	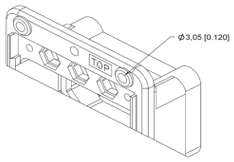	Similar to Modification Code 23 except that the Shell, Keys and Keys Retention Plate are Nickel-Plated.	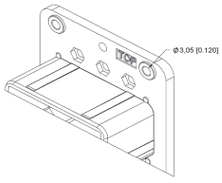	Similar to Modification Code 23 except that the Shell, Keys and Keys Retention Plate are Nickel-Plated.
64	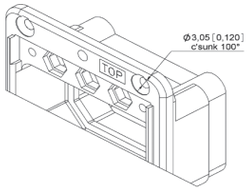	Similar to Modification Code 03 except that the Shell, Keys and Keys Retention Plate are Nickel-Plated.	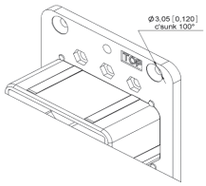	Similar to Modification Code 03 except that the Shell, Keys and Keys Retention Plate are Nickel-Plated.
66	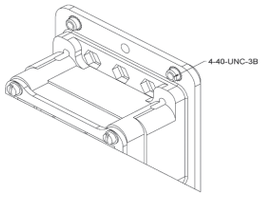	Similar to Modification Code 01 except that the Shell, Keys and Keys Retention Plate are Nickel-Plated.	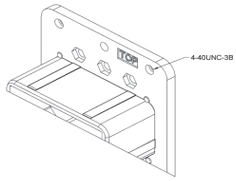	Similar to Modification Code 01 except that the Shell, Keys and Keys Retention Plate are Nickel-Plated.
67	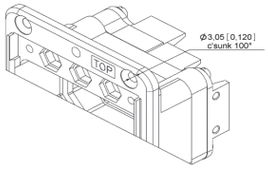	Sizes 1 and 2: 4 Holes Ø3,05 (0.120) c'sunk 100° with Attaching Tabs for Radiall Backshell Size 3: 6 Holes Ø3,05 (0.120) c'sunk 100° with Attaching Tabs for Radiall Backshell Shells are Nickel-Plated. Not Available in Size 4	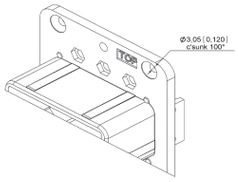	Sizes 1 and 2: 4 Holes Ø3,05 (0.120) c'sunk 100° with Attaching Tabs for Radiall Backshell Size 3: 6 Holes Ø3,05 (0.120) c'sunk 100° with Attaching Tabs for Radiall Backshell. Shells are Nickel-Plated Not Available for Size 4
73	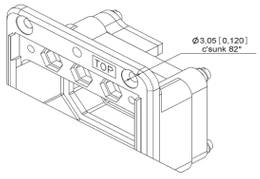	Sizes 1 and 2: 4 Holes Ø3,05 (0.120) c'sunk 82° Size 3: 6 Holes Ø3,05 (0.120) c'sunk 82° Size 4: 10 Holes Ø3,05 (0.120) c'sunk 82°	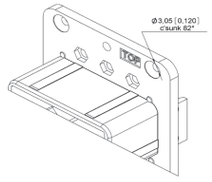	Sizes 1 and 2: 4 Holes Ø3,05 (0.120) c'sunk 82° Size 3: 6 Holes Ø3,05 (0.120) c'sunk 82° Size 4: 10 Holes Ø3,05 (0.120) c'sunk 82°

DSX-SAE AS81659

CODE	RECEPTACLE SHELL		PLUG SHELL	
77	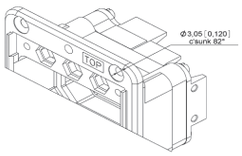	Sizes 1 and 2: 4 Holes Ø3,05 (0.120) c'sunk 82° with Attaching Tabs for Radiall Backshell Size 3: 6 Holes Ø3,05 (0.120) c'sunk 82° with Attaching Tabs for Radiall Backshell Not Available for Size 4	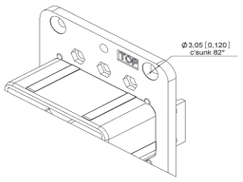	Sizes 1 and 2: 4 Holes Ø3,05 (0.120) c'sunk 82° with Attaching Tabs for Radiall Backshell Size 3: 6 Holes Ø3,05 (0.120) c'sunk 82° with Attaching Tabs for Radiall Backshell Not Available for Size 4
79	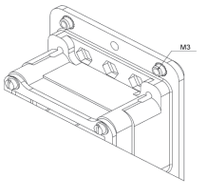	Sizes 1 and 2: 4 M3 Clinch Nuts Size 3: 6 M3 Clinch Nuts Size 4: 10 M3 Clinch Nuts	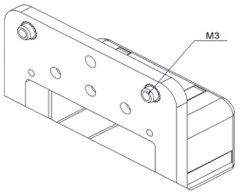	Sizes 1 and 2: 4 M3 Clinch Nuts Size 3: 6 M3 Clinch Nuts Size 4: 10 M3 Clinch Nuts

DSX-SAE AS81659

POLARIZATION CODE

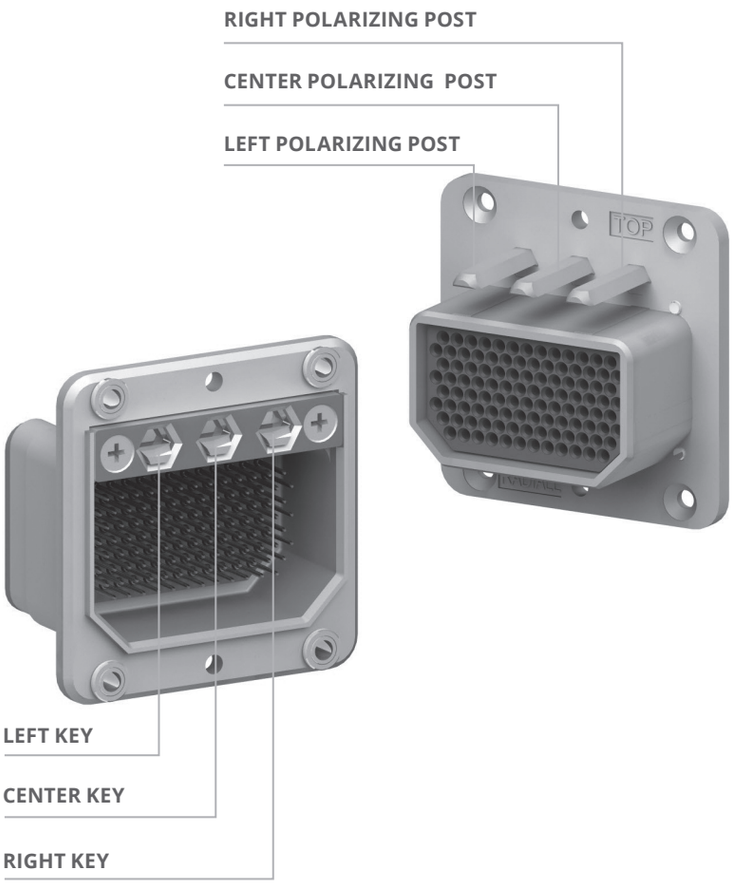

POSITION OF POLARIZATION KEYS AND POSTS.
Connectors are shown front side, with "TOP" upwards.

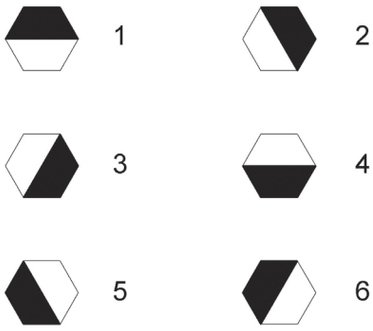

POSITION CODING

Dark area represents the polarizing post.
Clear position represents the key hole.

POLARIZATION CODE	RECEPTACLE SHELL			PLUG SHELL		
	LEFT KEY	CENTER KEY	RIGHT KEY	LEFT POST	CENTER POST	RIGHT POST
00	-	-	-	-	-	-
01	4	4	4	1	1	1
02	4	4	3	2	1	1
03	4	4	2	3	1	1
04	4	4	1	4	1	1
05	4	4	6	5	1	1
06	4	4	5	6	1	1
07	5	4	4	1	1	6
08	5	4	3	2	1	6
09	5	4	2	3	1	6
10	5	4	1	4	1	6
11	5	4	6	5	1	6

POLARIZATION CODE TABLE

POLARIZATION CODE	RECEPTACLE SHELL			PLUG SHELL		
	LEFT KEY	CENTER KEY	RIGHT KEY	LEFT POST	CENTER POST	RIGHT POST
12	5	4	5	6	1	6
13	6	4	4	1	1	5
14	6	4	3	2	1	5
15	6	4	2	3	1	5
16	6	4	1	4	1	5
17	6	4	6	5	1	5
18	6	4	5	6	1	5
19	1	4	4	1	1	4
20	1	4	3	2	1	4
21	1	4	2	3	1	4
22	1	4	1	4	1	4
23	1	4	6	5	1	4
24	1	4	5	6	1	4
25	2	4	4	1	1	3

DSX-SAE AS81659

POLARIZATION CODE	RECEPTACLE SHELL			PLUG SHELL		
	LEFT KEY	CENTER KEY	RIGHT KEY	LEFT POST	CENTER POST	RIGHT POST
26	2	4	3	2	1	3
27	2	4	2	3	1	3
28	2	4	1	4	1	3
29	2	4	6	5	1	3
30	2	4	5	6	1	3
31	3	4	4	1	1	2
32	3	4	3	2	1	2
33	3	4	2	3	1	2
34	3	4	1	4	1	2
35	3	4	6	5	1	2
36	3	4	5	6	1	2
37	4	3	4	1	2	1
38	4	3	3	2	2	1
39	4	3	2	3	2	1
40	4	3	1	4	2	1
41	4	3	6	5	2	1
42	4	3	5	6	2	1
43	5	3	4	1	2	6
44	5	3	3	2	2	6
45	5	3	2	3	2	6
46	5	3	1	4	2	6
47	5	3	6	5	2	6
48	5	3	5	6	2	6
49	6	3	4	1	2	5
50	6	3	3	2	2	5
51	6	3	2	3	2	5
52	6	3	1	4	2	5
53	6	3	6	5	2	5
54	6	3	5	6	2	5
55	1	3	4	1	2	4
56	1	3	3	2	2	4
57	1	3	2	3	2	4
58	1	3	1	4	2	4
59	1	3	6	5	2	4
60	1	3	5	6	2	4
61	2	3	4	1	2	3
62	2	3	3	2	2	3
63	2	3	2	3	2	3
64	2	3	1	4	2	3
65	2	3	6	5	2	3
66	2	3	5	6	2	3

POLARIZATION CODE	RECEPTACLE SHELL			PLUG SHELL		
	LEFT KEY	CENTER KEY	RIGHT KEY	LEFT POST	CENTER POST	RIGHT POST
67	3	3	4	1	2	2
68	3	3	3	2	2	2
69	3	3	2	3	2	2
70	3	3	1	4	2	2
71	3	3	6	5	2	2
72	3	3	5	6	2	2
73	4	2	4	1	3	1
74	4	2	3	2	3	1
75	4	2	2	3	3	1
76	4	2	1	4	3	1
77	4	2	6	5	3	1
78	4	2	5	6	3	1
79	5	2	4	1	3	6
80	5	2	3	2	3	6
81	5	2	2	3	3	6
82	5	2	1	4	3	6
83	5	2	6	5	3	6
84	5	2	5	6	3	6
85	6	2	4	1	3	5
86	6	2	3	2	3	5
87	6	2	2	3	3	5
88	6	2	1	4	3	5
89	6	2	6	5	3	5
90	6	2	5	6	3	5
91	1	2	4	1	3	4
92	1	2	3	2	3	4
93	1	2	2	3	3	4
94	1	2	1	4	3	4
95	1	2	6	5	3	4
96	1	2	5	6	3	4
97	2	2	4	1	3	3
98	2	2	3	2	3	3
99	2	2	2	3	3	3
100	2	2	1	4	3	3
101	2	2	6	5	3	3
102	2	2	5	6	3	3
103	3	2	4	1	3	2
104	3	2	3	2	3	2
105	3	2	2	3	3	2
106	3	2	1	4	3	2
107	3	2	6	5	3	2

DSX-SAE AS81659

POLARIZATION CODE	RECEPTACLE SHELL			PLUG SHELL		
	LEFT KEY	CENTER KEY	RIGHT KEY	LEFT POST	CENTER POST	RIGHT POST
108	3	2	5	6	3	2
109	4	1	4	1	4	1
110	4	1	3	2	4	1
111	4	1	2	3	4	1
112	4	1	1	4	4	1
113	4	1	6	5	4	1
114	4	1	5	6	4	1
115	5	1	4	1	4	6
116	5	1	3	2	4	6
117	5	1	2	3	4	6
118	5	1	1	4	4	6
119	5	1	6	5	4	6
120	5	1	5	6	4	6
121	6	1	4	1	4	5
122	6	1	3	2	4	5
123	6	1	2	3	4	5
124	6	1	1	4	4	5
125	6	1	6	5	4	5
126	6	1	5	6	4	5
127	1	1	4	1	4	4
128	1	1	3	2	4	4
129	1	1	2	3	4	4
130	1	1	1	4	4	4
131	1	1	6	5	4	4
132	1	1	5	6	4	4
133	2	1	4	1	4	3
134	2	1	3	2	4	3
135	2	1	2	3	4	3
136	2	1	1	4	4	3
137	2	1	6	5	4	3
138	2	1	5	6	4	3
139	3	1	4	1	4	2
140	3	1	3	2	4	2
141	3	1	2	3	4	2
142	3	1	1	4	4	2
143	3	1	6	5	4	2
144	3	1	5	5	4	2
145	4	6	4	1	5	1
146	4	6	3	2	5	1
147	4	6	2	3	5	1
148	4	6	1	4	5	1

POLARIZATION CODE	RECEPTACLE SHELL			PLUG SHELL		
	LEFT KEY	CENTER KEY	RIGHT KEY	LEFT POST	CENTER POST	RIGHT POST
149	4	6	6	5	5	1
150	4	6	5	6	5	1
151	5	6	4	1	5	6
152	5	6	3	2	5	6
153	5	6	2	3	5	6
154	5	6	1	4	5	6
155	5	6	6	5	5	6
156	5	6	5	6	5	6
157	6	6	4	1	5	5
158	6	6	3	2	5	5
159	6	6	2	3	5	5
160	6	6	1	4	5	5
161	6	6	6	5	5	5
162	6	6	5	6	5	5
163	1	6	4	1	5	4
164	1	6	3	2	5	4
165	1	6	2	3	5	4
166	1	6	1	4	5	4
167	1	6	6	5	5	4
168	1	6	5	6	5	4
169	2	6	4	1	5	3
170	2	6	3	2	5	3
171	2	6	2	3	5	3
172	2	6	1	4	5	3
173	2	6	6	5	5	3
174	2	6	5	6	5	3
175	3	6	4	1	5	2
176	3	6	3	2	5	2
177	3	6	2	3	5	2
178	3	6	1	4	5	2
179	3	6	6	5	5	2
180	3	6	5	6	5	2
181	4	5	4	1	6	1
182	4	5	3	2	6	1
183	4	5	2	3	6	1
184	4	5	1	4	6	1
185	4	5	6	5	6	1
186	4	5	5	6	6	1
187	5	5	4	1	6	6
188	5	5	3	2	6	6
189	5	5	2	3	6	6

DSX-SAE AS81659

POLARIZATION CODE	RECEPTACLE SHELL			PLUG SHELL		
	LEFT KEY	CENTER KEY	RIGHT KEY	LEFT POST	CENTER POST	RIGHT POST
190	5	5	1	4	6	6
191	5	5	6	5	6	6
192	5	5	5	6	6	6
193	6	5	4	1	6	5
194	6	5	3	2	6	5
195	6	5	2	3	6	5
196	6	5	1	4	6	5
197	6	5	6	5	6	5
198	6	5	5	6	6	5
199	1	5	4	1	6	4
200	1	5	3	2	6	4
201	1	5	2	3	6	4
202	1	5	1	4	6	4
203	1	5	6	5	6	4
204	1	5	5	6	6	4
205	2	5	4	1	6	3
206	2	5	3	2	6	3
207	2	5	2	3	6	3
208	2	5	1	4	6	3
209	2	5	6	5	6	3
210	2	5	5	6	6	3
211	3	5	4	1	6	2
212	3	5	3	2	6	2
213	3	5	2	3	6	2
214	3	5	1	4	6	2
215	3	5	6	5	6	2
216	3	5	5	6	6	2

DSX-SAE AS81659

CONTACTS

SIGNAL & POWER CRIMP CONTACTS SIZES 22, 20 HD, 16, 12 & 5

CONTACT SIZE	AWG	CROSS SECTION (MM²)	WIRE OUTSIDE DIA MM (INCH)	STRIPING LENGTH MM (INCH)	PIN	SOCKET	CRIMPING TOOL	POSITIONNER	SEL.	INS/EXT TOOL
22	22 24 26	0.38 0.21 0.14	1.4 (0.055)	3.5 (0.138)	616200 (M39029/ 11-144)	616300 (M39029/ 12-148)	282281 (M22520/ 2-01)	282970 (M22520/ 2-23)	4 3 3	282885 (M81969/ 1-01
22 Reduced Crimp Barrel	28 30	0.093 0.055	1.2 (0.047)	3.5	616201	616301			5 4	
20 HD	20 22 24	0.60 0.38 0.21	1.8 (0.071)	4.0 (0.157)	616210 (M39029/ 11-145)	616310 (M39029/ 12-149)		282971 (M22520/ 2-08)	7 6 5	282886 (M81969/ 1-02)
20 HD Reduced Crimp Barrel	26 28 30	0.14 0.093 0.055	1.25 (0.049)	4.0 (0.157)	616211	616311			6 5 4	
16	16 18 20	1.34 0.93 0.60	2.6 (0.236)	6.0 (0.236)	616230 (M39029/ 11-146)	616330 (M39029/ 12-150)	282291 (M22520/ 1-01)	282972 (M22520/ 1-02)	6 5 4	282546 (M81969/ 1-03)
16 Reduced Crimp Barrel	20 22 24	0.60 0.38 0.21	1.80 (0.071)	6.0 (0.236)	616231	616331			5 4	
12	12 14 16	3.18 1.91 1.34	3.4 (0.134)	6.0 (0.236)	616240 (M39029/ 11-147)	616340 (M39029/ 11-151)		282579 (M22520/ 1-11)	8 7 6	282547 (M81969/ 28-02)
For Cavity 5	12 14	3.18 1.91	3.4 (0.134)	8.0 (0.315)	616261	616361	282296 (DANIELS M300BT) [1]		1 1	282946 (M81969/ 28-01)
	10 8	5.0 9.0	5.7 (0.234)		616266	616366		282557	5 8	

THERMOCOUPLE CONTACTS SIZES 22 & 20 HD-MADE OF CHROMEL

CONTACT SIZE	AWG	CROSS SECTION (MM²)	WIRE OUTSIDE DIA MM (INCH)	STRIPING LENGTH MM (INCH)	PIN	SOCKET	CRIMPING TOOL	POSITIONNER	SEL.	INS/EXT TOOL
22	22 24 26	0.38 0.21 0.14	1.4 (0.055)	3.5 (0.138)	620280	620380	282281 (M22520/ 2-01)	282970 (M22520/ 2-23)	4 3 3	282885 (M81969/ 1-01)
20 HD	20 22 24	0.60 0.38 0.21	1.8 (0.071)	4.0 (0.157)	620290	620390		282971 (M22520/ 2-08)	7 6 5	282886 (M81969/ 1-02)

THERMOCOUPLE CONTACTS SIZES 22 & 20 HD-MADE OF ALUMEL

CONTACT SIZE	AWG	CROSS SECTION (MM²)	WIRE OUTSIDE DIA MM (INCH)	STRIPING LENGTH MM (INCH)	PIN	SOCKET	CRIMPING TOOL	POSITIONNER	SEL.	INS/EXT TOOL
22	22 24 26	0.38 0.21 0.14	1.4 (0.055)	3.5 (0.138)	620281	620381	282281 (M22520/ 2-01)	282970 (M22520/ 2-23)	4 3 3	282885 (M81969/ 1-01)
20 HD	20 22 24	0.60 0.38 0.21	1.8 (0.071)	4.0 (0.157)	620291	620391		282971 (M22520/ 2-08)	7 6 5	282886 (M81969/ 1-02)

Notes

1. Daniels WA27-309-EP air pressure tool with crimp setting 5 can also be used. Crimp setting 5 is not adjustable and must be set by the factory.

DSX-SAE AS81659

SIZES 22 & 20 HD-PC TAIL CONTACTS

CONTACT SIZE	CONTACT ARRANGEMENT	PIN	SOCKET	EXT. TOOL	DIMENSIONS MM (INCH)				
					A	B	C	D	E
22	106	-	616379	282890	6.1/5.3 (0.240/0.209)	6.5 (0.256)	0.6 (0.023)	25.25/25.75 (0.994/1.013)	1.55/1.75 (0.061/0.069)
			616303		14.4/13.6 (0.567/0.535)	9.4 (0.370)			
		616206 [1]	616306 [1]		5.9/6.7 (0.232/0.263)	3.8 (0.149)			
	36C7 for Pin Contacts		-		0.82/0.10 (0.032/0.004)			-	7.85/7.44 (0.293/0.309)
	36C7 for Socket Contacts	-	616306		4/3.3 (0.157/0.130)				-
		-	616303		11.72/11 (0.461/0.433)	9.4 (0.370)			
20 HD	40-45-57-32C2-32C4-40C1	616216 [1]	-	282891	6.6/7.6 (0.259/0.299)	-	0.8 (0.031)	31.25/31.75 (1.23/1.25)	7.45/7.75 (0.293/0.305)
	67-33C4				6.3/7.3 (0.248/0.287)				
	40-45-57-32C2-32C4-40C1	616223	616323 [1]		3.5/4.3 (0.138/0.169)	3.2 (0.126)	0.6 (0.023)		
	67-33C4				3.2/4 (0.126/0.157)				

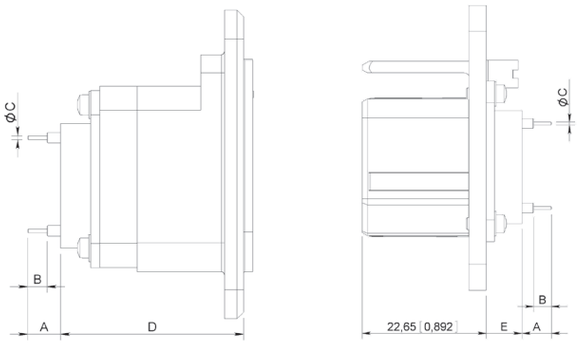

Notes

1. Connectors delivered in the "Y" termination style will be fitted with contacts marked by "[1]" (see above table). If another style of pc tail contact is desired, use termination style "x" when ordering the connector and order contacts separately.

DSX-SAE AS81659

SIZES 22 & 20 HD-WIRE WRAP CONTACTS

CONTACT SIZE	AWG	CONTACT ARRANGEMENT	PIN	SOCKET	EXT. TOOL	DIMENSIONS MM (INCH)		
						A	B	C
22	26 28 30	106	610203 (2 Wrap Levels)	610303 (2 Wrap Levels)	282527	10/11 (0.393/0.433)	25.25/25.75 (0.994/1.013)	1.55/1.75 (0.061/0.069)
			610204 (3 Wrap Levels)	610304 (3 Wrap Levels)		12.5/13.5 (0.492/0.531)		
20	26 28 30	40-45-57-32C2-32C4-40C1-67-33C4	610214 (2 Wrap Levels)	610314 (2 Wrap Levels)		10.3/11.3 (0.405/0.445)	31.25/31.75 (1.203/1.250)	7.45/7.75 (0.293/0.305)
						9.85/10.95 (0.387/0.431)		

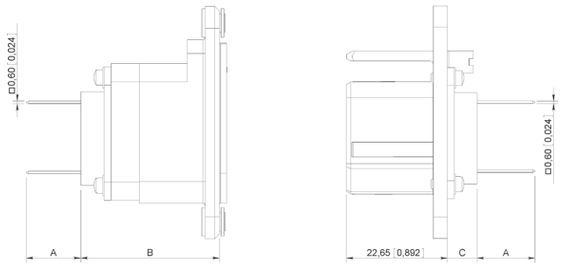

COAXIAL CRIMP CONTACTS SIZE 1

(DESIGN AS PER MS3168-3169 SPECIFICATIONS)

CONTACT SIZE	CONTACT ARRANGEMENT	CABLE [1]	PIN	SOCKET	CENTER CONTACT			OUTER BODY		
					CRIMPING TOOL	POSITIONER	SEL.	CRIMPING TOOL	DIE	HEX
1	MC2	UT 141 RG 402	616005	-	Solder Contact			282293 (M22520/5-01)	282246 (M22520/5-05)	A
		RG 58 RG 141 KX 15	616006 Right Angle	-	Solder Contact					
		RG 213 KX 4	-	616102001	282291 (M22520/1-01)	282997 (M22520/1-13)	8		282247 (M22520/5-61)	A
		RG 214 RG 225	- 616003	616103001 -						
		RG 142	616007 Right Angle	-	Solder Contact					A
		RG 142 RG 223	-	616107001	282291 (22520/1-01)	282997 (M22520/1-13)	7			
		RG 174 KX 22	-	616100	Solder Contact					
		RD 316	616004 Right Angle	-	Solder Contact					B
		-	616009	-	SMA Termination					

PART NUMBER	616004–616006-616007	616009–616100–616103001 616106-616102001	616003–616005 616107001
Dielectric Withstanding Voltage at Sea Level (Vrms)	1,000	1,500	2,500

Notes

1. For other cable, please contact Radiall.

DSX-SAE AS81659

COAXIAL CRIMP CONTACTS SIZE 3

CONTACT SIZE	CONTACT ARRANGEMENT	CABLE [1]	PIN	SOCKET	CENTER CONTACT			OUTER BODY		
					CRIMPING TOOL	POSITIONER	SEL.	CRIMPING TOOL	DIE	HEX
3	MC3	RG 142 RG 223	616013	-	Solder			282293 (M22520/5-01)	282246 (M22520/5-05)	A
			-	616113	282291 (M22520/1-01)	282997 (M22520/5-05)	7			
		RG 316	616015 Right Angle [1]	-	Solder					B
		UT 141 RG 402	616014	-	Solder					
		RG 214 RG 225	-	616111	282291 (M22520/1-01)	282997 (M22520/5-05)	8	282293 (M22520/5-01)	282247 (M22520/5-61)	A
		RG 213 KX 4	-	616112						

COAXIAL CRIMP CONTACTS SIZE 5

(DESIGN AS PER MS3172 SPECIFICATIONS)

The following contacts have to be fitted with a sealing boot when used in DSX E connectors (see page 7-29). Coaxial cavities without any contact can be fitted with sealing plugs when used in DSX E connectors.

CONTACT SIZE	CONTACT ARRANGEMENT	CABLE [1]	PIN [3 & 4]	SOCKET [3 & 4]	CENTER CONTACT			OUTER BODY		
					CRIMPING TOOL	POSITIONER	SEL.	CRIMPING TOOL	DIE	HEX
5	32C2 32T2 33C4 33T4 36C7 36T7 40C1 40T1	RG 58 KX 15	616120	616020	282281 (M22520/2-01)	282974	6	282293 (M22520/5-01)	282246 (M22520/5-05)	A
		RG 141	616120	616020			8			
		RG 142 RG 223 KX 23	616121	616021			8			
		RG 179 RG 188 RG 174 RG316 KX 22	616122	616022			7			B
		RG 179 RG 187	-	616022002		282550 DANIELS K345				
		RG 196 RG 178 KX 21	616123	616023		282974	6			
		RG 195 RG 180	616124	616024						
		RG 316 DS	616163	616026			7			
		UT .085	616125	-	Solder					
		UT .141	616128	616028						

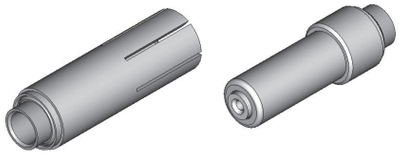

Notes

1. For other cable, please contact Radiall
2. Dielectric withstanding voltage at sea level: 1,500 Vrms. Except 1,000 Vrms for 616015
3. Dielectric withstanding voltage at sea level: 750 Vrms
4. Extraction tool: 282946 (M81969/28-01)

DSX-SAE AS81659

COAXIAL CRIMP CONTACTS SIZE 7

CONTACT SIZE	CONTACT ARRANGEMENT	CABLE [1]	PIN [2 & 3]	SOCKET [2 & 3]	CENTER CONTACT			OUTER BODY		
					CRIMPING TOOL	POSITIONER	SEL.	CRIMPING TOOL	DIE	HEX
7	MC3	RG 58 RG 141 KX 15	610120	-	Solder			282293 (M22520/5-01)	282246 (M22520/5-05)	A
		RG 174 RG 316 KX 22 RG 188	610126	-						B
		RG 58 KX 15	-	616030	282281 (M22520/2-01	282550 (DANIELS K345)	6			A
		RG 141	-	616030			8			A
		RG 142 RG 223 KX 23	-	616031			8			A
		RG 174 RG 316 KX 22	-	616032			7			B

COAXIAL CRIMP CONTACTS SIZE 9

Add 001 at the end of each part number pin or socket to order environmental size 9 coax contacts. Coaxial cavities without any contact can be fitted with sealing plugs when used in DSX E connectors.

CONTACT SIZE	CONTACT ARRANGEMENT	CABLE [1]	PIN [2 & 3]	SOCKET [2 & 3]	CENTER CONTACT			OUTER BODY		
					CRIMPING TOOL	POSITIONER	SEL.	CRIMPING TOOL	DIE	HEX
9	C8 T8 32C4 32T4	RG 58 KX 15	616140	616040	282281 (M22520/2-01)	282974	6	282293 (M22520/5-01)	282246 (M22520/5-05)	A
		RG 141	-	-			8			
		RG 142 RG 223 KX 23	616141	616041			8			
		RG 174 RG 179 RG 188 RG 316 KX 22	616142	616042			7			B
		RG 178 RG196 KX 21	616143	616043			6			
		RG 180 RG 195	616144	616044			6			

COAXIAL CRIMP CONTACTS SIZE 15

CONTACT SIZE	CONTACT ARRANGEMENT	CABLE [1]	PIN [2 & 3]	SOCKET [2 & 3]	CENTER CONTACT			OUTER BODY		
					CRIMPING TOOL	POSITIONER	SEL.	CRIMPING TOOL	DIE	HEX
15	D8 26 67 32C4 32T4 33C4 33T4	RG 316 RG 179	616154	618050	282281 (M22520/2-01)	282555	2	282292 (M22520/4-01)	282556	-
		KX 22 DS	616150							
		KX 21 DS	616151	618053						
		RG 178 KX 21	616153	618054						

Notes

1. For other cable, please contact Radiall
2. Dielectric withstanding voltage at sea level: 750 Vrms
3. Extraction tool: 282946 (M81969/28-01)
4. Dielectric withstanding voltage at sea level: 350 Vrms

DSX-SAE AS81659

CONCENTRIC TWINAX CRIMP CONTACTS SIZE 5

(DESIGN AS PER 17B9E4005 SPECIFICATIONS)

CONTACT SIZE	CONTACT ARRANGEMENT	CABLE	PIN	SOCKET
The Following Contacts have to be Installed in the Non-Environmental Inserts				
5	32C3 32T2 40C1 40T1 36C7 36T7 33C4 33T4	MIL-C-17/176-00002	616195001	616095001
		PAN 6421	616195005	616095005
The Following Contacts have to be Installed in the Environmental Inserts				
5	32C3 32T2 40C1 40T1 33C4 33T4	MIL-C-17/176-00002	616195009	616095009
	36C7 36T7		616195012	-

CONCENTRIC TWINAX CRIMP CONTACTS SIZE 9

(DESIGN AS PER 17B9E4005 SPECIFICATIONS)

CONTACT SIZE	CONTACT ARRANGEMENT	CABLE	PIN	SOCKET
The Following Contacts have to be Installed in the Non-Environmental Inserts				
9	C8 T8 32C4 32T4	MIL-C-17/176-00002	616196003	616096003
The Following Contacts have to be Installed in the Environmental Inserts				
9	C8 T8	MIL-C-17/176-00002	-	616096006
	32C4 32T4		616196004	616096004

TRIAX CRIMP CONTACTS SIZE 5

CONTACT SIZE	CONTACT ARRANGEMENT	CABLE	PIN	SOCKET
The Following Contacts have to be Installed in the Non-Environmental Inserts				
5	33C4 33T4 32C2 32T2 40C1 40T1 36C7 36T7	RGX 179	616195004	616095004
		ST5M 1323-1	616195007	616095007
		HS4863-1 HS4863-2	616195000	616095000
The Following Contacts have to be Installed in the Environmental Inserts				
5	36C7 36T7	RGX 179	-	616095010

TRIAX CRIMP CONTACTS SIZE 9

CONTACT SIZE	CONTACT ARRANGEMENT	CABLE	PIN	SOCKET
The Following Contacts have to be Installed in the Non-Environmental Inserts				
9	C8 T8 32C4 32T4	RGX 179	616196001	616096001
The Following Contacts have to be Installed in the Environmental Inserts				
9	32C4 32T4	RGX 179	/	616096002

DSX-SAE AS81659

TRIAX CONTACTS WITH PC TAIL SIZE 5

The contacts shown in the table below are rear release rear removable contacts

CONTACT TYPE	PART NUMBER	CONTACT DRAWING	REAR EXTENSION FROM THE INSERT MM (INCH)
Pin	616195003	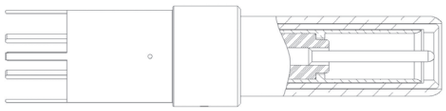	32C2, 32T2, 33C4,33T4 40C1 and 40T1 = 3.2/4.0 (0.125/0.158) 36C7 and 36T7 = 5.40/6.10 (0.212/0.240)
	616195008	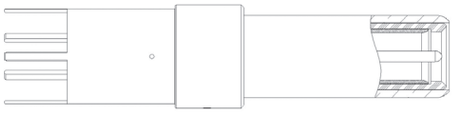	

CONTACT TYPE	PART NUMBER	CONTACT DRAWING	REAR EXTENSION FROM THE INSERT MM (INCH)
Pin	616196005		C8 and T8 = 1.30/2.15 (0.051/0.085) 32C4 and 32T4 = 6.45/7.30 (0.253/0.288)
	616196007	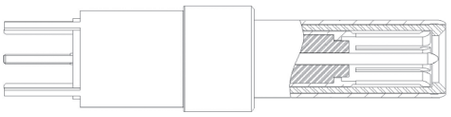	C8 & T8 = 0 32C4 & 32T4 = 3.70/4.35 (0.145/0.172)

SIZE 8 QUADRAX CONTACTS

WIRE	TYPE	PART NUMBER (NON-ENVIRONMENTAL)	PART NUMBER (ENVIRONMENTAL)	INS/EXT TOOL
ABS1503KD24 (110 Ω)	Pin	620175010	620175011	282549001 (M81969/28.03 or M81969/14.06)
	Socket	620075010	620075011	
THERMAX 956S-4T200 GORE RCN8422 (110 Ω)	Pin	620179002	620179001	
	Socket	620079002	620079001	
TENSOLITE NF24Q100 (100 Ω)	Pin	620175050	620175051	
	Socket	620075050	620075051	
TENSOLITE NF26Q100 JSFY 18	Pin	620175021	620175020	
	Socket	620075021	620075020	

DSX-SAE AS81659

FIBER OPTIC CONTACTS & ACCESSORIES

MIL-PRF-29504 fiber optic termini were developed several decades ago and are described into several MIL standard documents. They fit into standard electrical cavities and do not require specific inserts. They can replace MIL-PRF-29504/10 pin and MIL-PRF-29504/11 socket termini.

MIL-PRF-29504 CONTACTS

PIN CONTACT PART NUMBER	SOCKET CONTACT PART NUMBER	CONTACT SIZE	FIBER DIAMETER (MM)	CABLE DIAMETER (MM)	FERRULE MATERIAL
F724 005 000	F724 104 000	16	125	1.5	Ceramic
F724 011 000	F724 111 000	16	125	1.8	Ceramic
F724 009 000	F724 109 000	16	125	2	Ceramic
F724 002 000	F724 101 000	16	140	1.5	Ceramic
F724 041 000	F724 140 000	16	230	2	Metallic
F724 007 000	F724 107 000	16	280	1.6	Ceramic

Size 12 MIL-T-29504 contacts can be available upon request, please contact your Radiall sales representative.
Note that Radiall can support you with your cable and harness assemblies. Please contact your sales representative.

ACCESSORIES

Radiall offers you a unique solution to equip your DSX connectors with EN4531 fiber optic contacts.

This solution offers the following characteristics and advantages:

- It turns a ARINC 404 size 5 or size 8 cavity into a fiber optic link
- It accepts any EN4531-101 fiber optic contacts

EN4531-101 (ABS 1379) ADAPTER FOR QUADRAX SIZE 8 CAVITY

	PART NUMBER	DESCRIPTION
	620946005	Pin Quadrax Adapter for EN4531 Contact
	620946006	Socket Quadrax Adapter for EN4531 Contact

EN4531-101 (ABS 1379) ADAPTER FOR SIZE 5 CAVITY

EN4531-101 adapter for size 5 cavity is available for DSX F connectors with inserts 33C4 and 81C3 only, see DSX F connectors page 7-42.

	PART NUMBER	DESCRIPTION
	616925001	Pin Adapter for #5 Cavity
	616925002	Socket Adapter for #5 Cavity

DSX-SAE AS81659

SEALING PLUGS & FILLER PLUGS

Filler plugs are used in non-environmental connectors and sealing plugs are used in environmental connectors and conform to MS27488

CONTACT SIZE	SEALING PLUGS	FILLER PLUGS
Size 22	616910	620920
Size 20 HD	616911	610941
Size 16	616912	620922
Size 12	616913	616923
Size 5	See Notes	620924, 616923 [1] or 616917 [2] for Pin Contact Cavity 620925 for Socket Contact Cavity
Size 9	See Notes	616915 [2]

SEALING BOOTS

The sealing boots in table 1 are to be used in all inserts with size 5 contact cavities except 36C7 and 36T7 inserts which use the sealing bushing plus one in the sealing sleeves in table 2.

TABLE 1

CABLE	X DIA. MM (INCH)	PART NUMBER	DRAWING
RG58, RG142	4.3 (0.169)	92505490	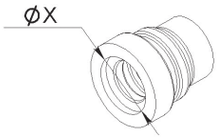
RG 174	2 (0.079)	92505470	
RG 178	1.4 (0.055)	92505460	
RG180	3.1 (0.122)	92505480	
-	0	92505450	

TABLE 2

CABLE	X DIA. MM (INCH)	SEALING BUSHING	SEALING SLEEVE	PART NUMBER
RG58, RG141, RG142, RG223, KX15, KX23	4.7 (0.185)	92505590	92505591	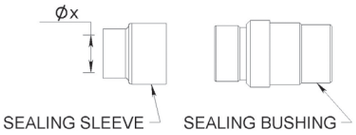
RG174, RG179, RG187, RG188, RG316, KX22, UT.085	2.15 (0.085)		92505593	
RG178, RG196	1.5 (0.059)		92505594	
RG180, RG195, UT.141	3.05 (0.120)		92505592	
-	0	616914010 [3]		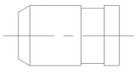

DUST CAPS

Conductive dust caps are made of thermoplastic and non conductive dust caps are made of polyethylene.

	CONDUCTIVE (BLACK)	NON CONDUCTIVE (RED)	DRAWING
Plug	610804	610803	
Receptacle	610806	610805	

Notes

1. 616923 is made of aluminium and is nickel-plated
2. 616917 and 616915 provide interfacial sealing on class T connectors
3. 616914010 is made of PTFE

DSX-SAE AS81659

BACKSHELLS

The following backshells are only for use with SAE AS81659 and ARINC 404 shell type B connectors for the following modification codes 02-04-17-19-22-36-61-67 and 77.

Backshells do not ensure EMI functions and cannot be installed on size 4 connectors as there is limited access to screws.

ENTRY TYPE	PLATING	PART NUMBER	DRAWING
Top Entry	Yellow Anodized	610902	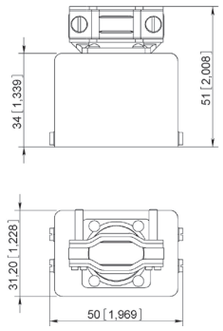
	Nickel	610906	
Right Entry	Yellow Anodized	610900	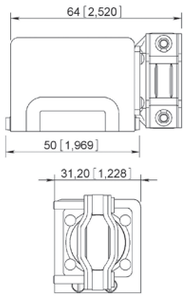
	Nickel	610910	
Left Entry	Yellow Anodized	610901	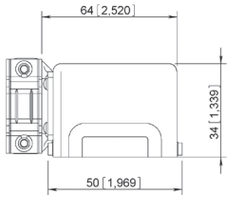
	Nickel	610911	

DSX-SAE AS81659

DIMENSIONS

SHELL SIZE 1 NON-ENVIRONMENTAL (WITHOUT GROMMET SEAL)

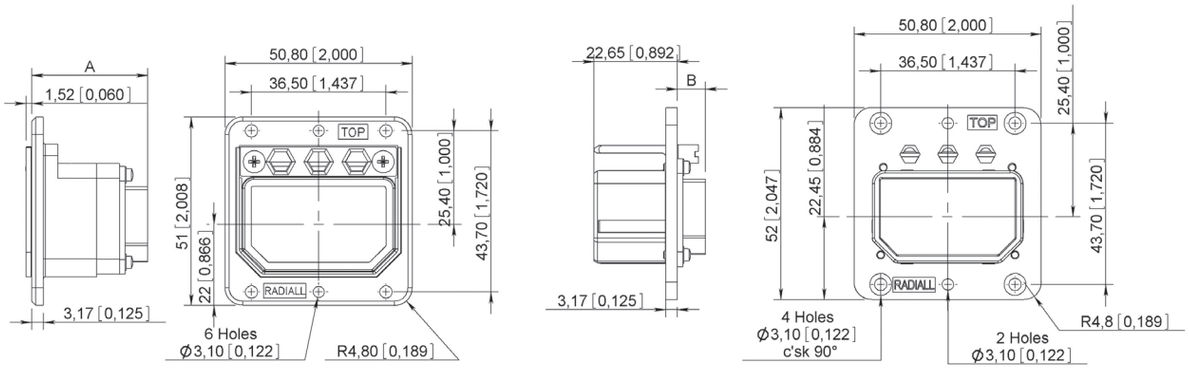

MAX DIMENSION MM (INCH)	ALL CRIMP CONTACT ARRANGEMENTS EXCEPT 106	CONTACT ARRANGEMENT 106	ARRANGEMENTS WITH COAX CONTACTS SIZE 1 & 3	CONTACT ARRANGEMENT 36C7 & 36T7	ARRANGEMENTS WITH COAX CONTACTS SIZE 5 & 9 EXCEPT 36C7
A	32 (1.260)	25.8 (1.016)	26.85 (1.057)	28.5 (1.122)	37.42 (1.473)
B	7.9 (0.311)	1.9 (0.075)	3 (0.118)	7.85 (0.309)	13.5 (0.531)

SHELL SIZE 1 ENVIRONMENTAL (WITH GROMMET SEAL)

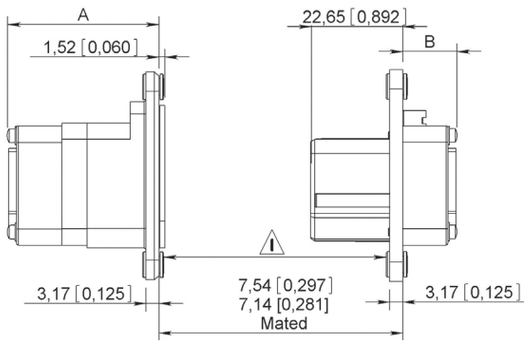

MAX DIMENSION MM (INCH)	ALL CRIMP CONTACT ARRANGEMENTS EXCEPT MC2–MC3-106	CONTACT ARRANGEMENT 106	CONTACT ARRANGEMENT 36C7 & 36T7
A	38.5 (1.516)	33.5 (1.319)	39.05 (1.537)
B	14.2 (0.559)	9.5 (0.374)	18.55 (0.730)

⚠ *Important Note: Only 4 mm of space is available on the modification code selection.*

DSX-SAE AS81659

SHELL SIZE 2 NON-ENVIRONMENTAL (WITHOUT GROMMET SEAL)

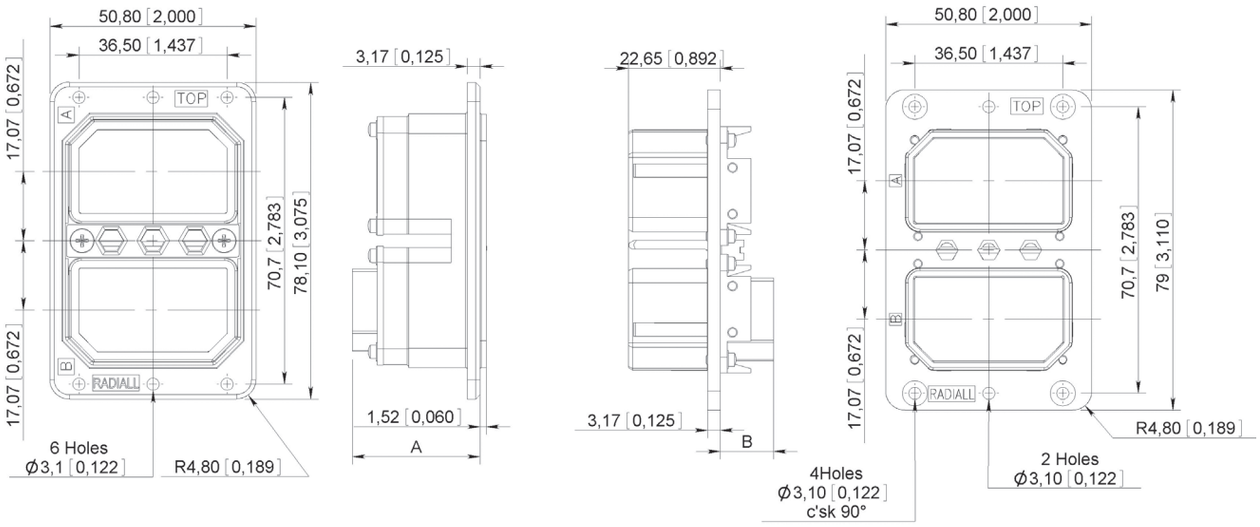

MAX DIMENSION MM (INCH)	ALL CRIMP CONTACT ARRANGEMENTS EXCEPT 106	CONTACT ARRANGEMENT 106	ARRANGEMENTS WITH COAX CONTACTS SIZE 1 & 3	CONTACT ARRANGEMENT 36C7 & 36T7	ARRANGEMENTS WITH COAX CONTACTS SIZE 5 & 9 EXCEPT 36C7
A	32 (1.260)	25.8 (1.016)	26.85 (1.057)	28.5 (1.122)	37.42 (1.473)
B	7.9 (0.311)	1.9 (0.075)	3 (0.118)	7.85 (0.309)	13.5 (0.531)

SHELL SIZE 2 ENVIRONMENTAL (WITH GROMMET SEAL)

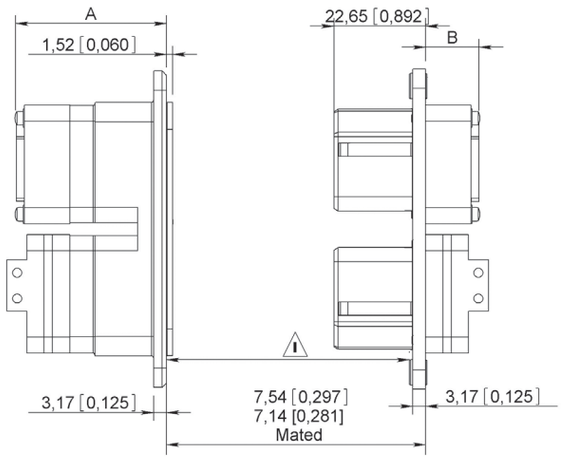

MAX DIMENSION MM (INCH)	ALL CRIMP CONTACT ARRANGEMENTS EXCEPT MC2–MC3-106	CONTACT ARRANGEMENT 106	CONTACT ARRANGEMENT 36C7 & 36T7
A	38.5 (1.516)	33.5 (1.319)	39.05(1.537)
B	14.2 (0.559)	9.5 (0.374)	18.55 (0.730)

⚠ *Important Note: Only 4 mm of space is available on the modification code selection.*

DSX-SAE AS81659

SHELL SIZE 3 NON-ENVIRONMENTAL (WITHOUT GROMMET SEAL)

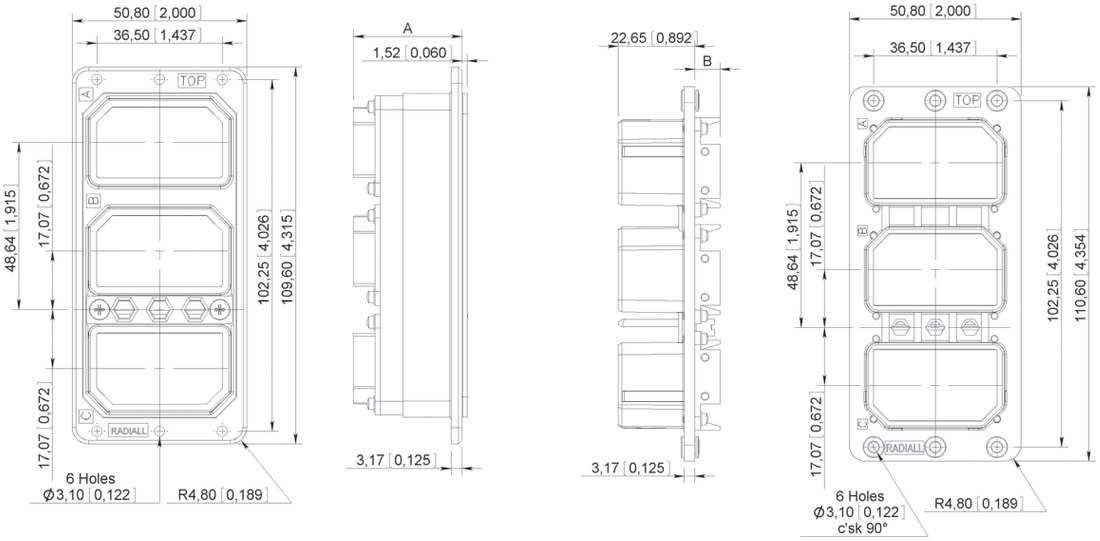

MAX DIMENSION MM (INCH)	ALL CRIMP CONTACT ARRANGEMENTS EXCEPT 106	CONTACT ARRANGEMENT 106	ARRANGEMENTS WITH COAX CONTACTS SIZE 1 & 3	CONTACT ARRANGEMENT 36C7 & 36T7	ARRANGEMENTS WITH COAX CONTACTS SIZE 5 & 9 EXCEPT 36C7
A	32 (1.260)	25.8 (1.016)	26.85 (1.057)	28.5 (1.122)	37.42 (1.473)
B	7.9 (0.311)	1.9 (0.075)	3 (0.118)	7.85 (0.309)	13.5 (0.531)

SHELL SIZE 3 ENVIRONMENTAL (WITH GROMMET SEAL)

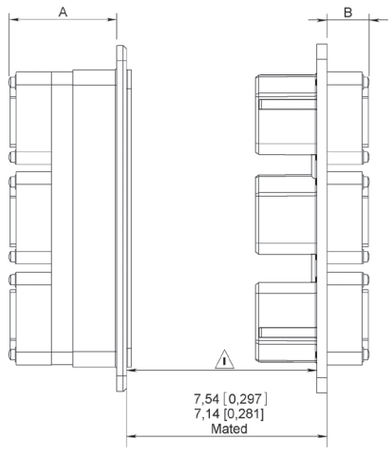

MAX DIMENSION MM (INCH)	ALL CRIMP CONTACT ARRANGEMENTS EXCEPT MC2–MC3-106	CONTACT ARRANGEMENT 106	CONTACT ARRANGEMENT 36C7 & 36T7
A	38.5 (1.516)	33.5 (1.319)	39.05(1.537)
B	14.2 (0.559)	9.5 (0.374)	18.55 (0.730)

⚠ *Important Note: Only 4 mm of space is available on the modification code selection.*

DSX-SAE AS81659

SHELL SIZE 4 NON-ENVIRONMENTAL (WITHOUT GROMMET SEAL)

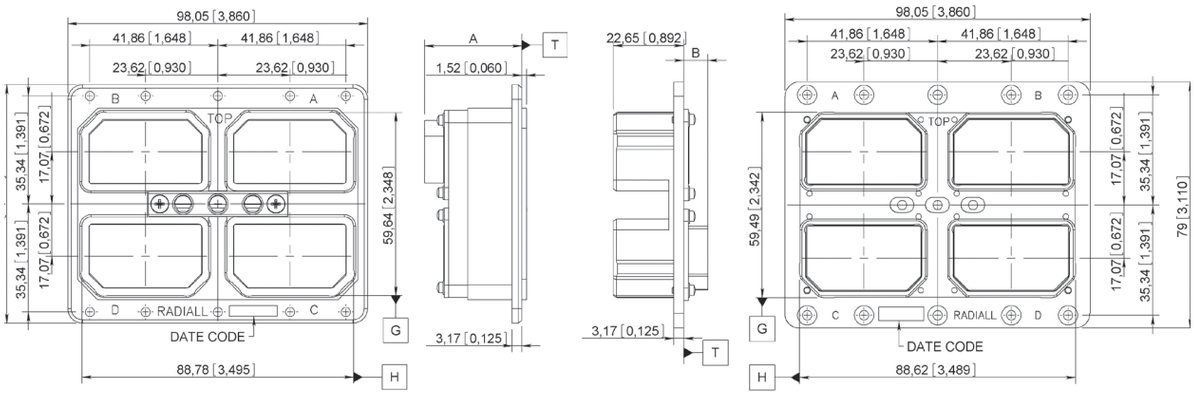

MAX DIMENSION MM (INCH)	ALL CRIMP CONTACT ARRANGEMENTS EXCEPT 106	CONTACT ARRANGEMENT 106	ARRANGEMENTS WITH COAX CONTACTS SIZE 1 & 3	CONTACT ARRANGEMENT 36C7 & 36T7	ARRANGEMENTS WITH COAX CONTACTS SIZE 5 & 9 EXCEPT 36C7
A	32 (1.260)	25.8 (1.016)	26.85 (1.057)	28.5 (1.122)	37.42 (1.473)
B	7.9 (0.311)	1.9 (0.075)	3 (0.118)	7.85 (0.309)	13.5 (0.531)

SHELL SIZE 4 ENVIRONMENTAL (WITH GROMMET SEAL)

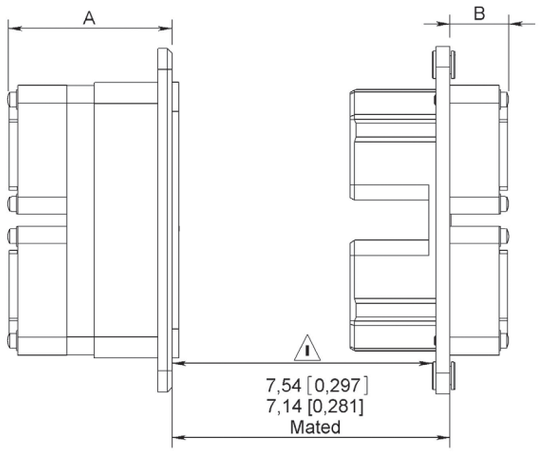

MAX DIMENSION MM (INCH)	ALL CRIMP CONTACT ARRANGEMENTS EXCEPT MC2–MC3-106	CONTACT ARRANGEMENT 106	CONTACT ARRANGEMENT 36C7 & 36T7
A	38.5 (1.516)	33.5 (1.319)	39.05(1.537)
B	14.2 (0.559)	9.5 (0.374)	18.55 (0.730)

⚠ *Important Note: Only 4 mm of space is available on the modification code selection.*

DSX-SAE AS81659

PANEL CUT-OUTS

SHELL SIZE 1

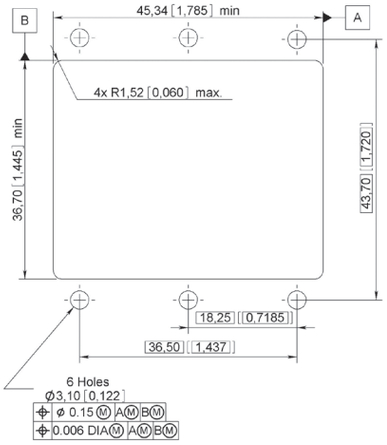

SHELL SIZE 2

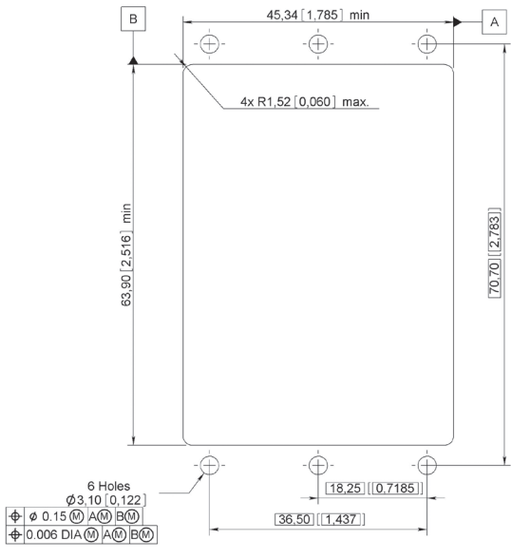

SHELL SIZE 3

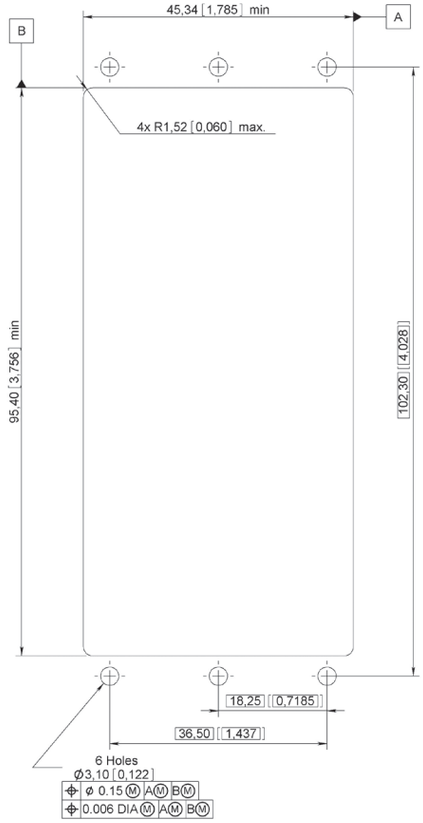

SHELL SIZE 4

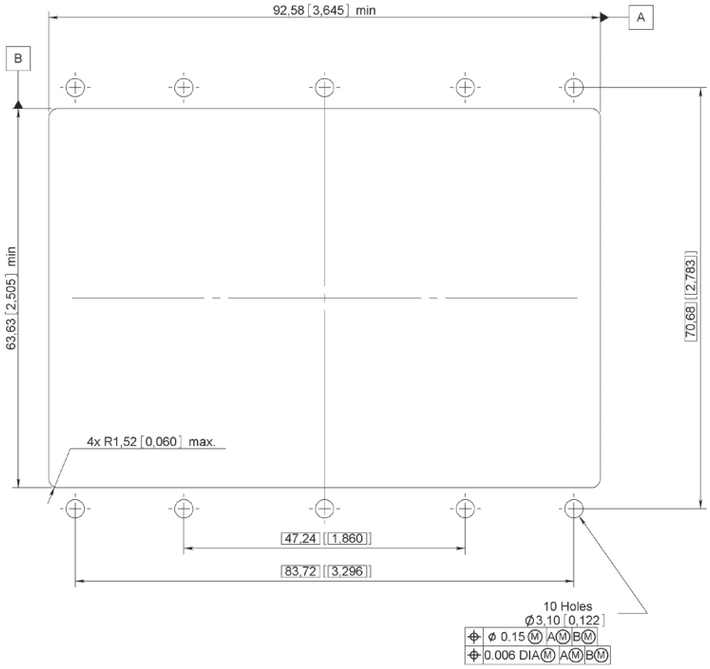

DSX-SAE AS81659

CROSS REFERENCE

FROM RADIALL TO MILITARY P/N

RADIALL PART NUMBER	MIL PART NUMBER
616200	M3902911144
616210	M3902911145
616230	M3902911146
616240	M3902911147
616300	M3902912148
616310	M3902912149
616330	M3902912150
616340	M3902912151
616910	MS2748822
616911	MS2748820
616912	MS2748816
616913	MS2748812
DSXE1PS106P73	M8165929A20041
DSXE1PS26S73	M8165929A20002
DSXE1PS32C2S73	M8165929A20140
DSXE1PS32C4S73	M8165929A20150
DSXE1PS33C4S73	M8165929A20104
DSXE1PS40C1S73	M8165929A20142
DSXE1PS40S73	M8165929A20010
DSXE1PS45S73	M8165929A20018
DSXE1PS57P73	M8165929A20025
DSXE1PS57S73	M8165929A20026
DSXE1PS67S73	M8165929A20034
DSXE1PSD8S73	M8165929A20084
DSXE1PXC8S73	M8165929A20136
DSXE1R32C4P00	M8165931A20149
DSXE1R33C4P00	M8165931A20103
DSXE1RS106S00	M8165931A20042
DSXE1RS26P00	M8165931A20001
DSXE1RS32C2P00	M8165931A20139
DSXE1RS40C1P00	M8165931A20141
DSXE1RS40P00	M8165931A20009
DSXE1RS45P00	M8165931A20017
DSXE1RS57P00	M8165931A20025
DSXE1RS57S00	M8165931A20026
DSXE1RS67P00	M8165931A20035
DSXE1RSD8P00	M8165931A20083
DSXE2PS106PS106P73	M8165933A20043
DSXE2PS106PS26S73	M8165933A20058
DSXE2PS106PS67S73	M8165933A20090
DSXE2PS106PXC8S73	M8165933A20088

RADIALL PART NUMBER	MIL PART NUMBER
DSXE2PS26SS106P73	M8165933A20060
DSXE2PS26SS26S73	M8165933A20004
DSXE2PS32C2SS106P73	M8165933A20130
DSXE2PS32C2SS40C1S73	M8165933A20122
DSXE2PS32C2SS45S73	M8165933A20124
DSXE2PS32C2SS57S73	M8165933A20126
DSXE2PS32C2SS67S73	M8165933A20128
DSXE2PS32C4SS106P73	M8165933A20152
DSXE2PS32C4SXC8S73	M8165933A20160
DSXE2PS33C4SS106P73	M8165933A20106
DSXE2PS33C4SXC8S73	M8165933A20108
DSXE2PS40C1SS40C1S73	M8165933A20132
DSXE2PS40SS40S73	M8165933A20012
DSXE2PS45SS45S73	M8165933A20020
DSXE2PS57SS106P73	M8165933A20134
DSXE2PS57SS26S73	M8165933A20148
DSXE2PS57SS57S73	M8165933A20028
DSXE2PS67SS106P73	M8165933A20072
DSXE2PS67SS67S73	M8165933A20036
DSXE2PXC8SS106P73	M8165933A20118
DSXE2PXC8SS32C4S73	M8165933A20156
DSXE2PXC8SS57S73	M8165933A20146
DSXE2PXMC2SS40C1S73	M8165933A20110
DSXE2PXMC2SS57S73	M8165933A20112
DSXE2PXMC3SS106P73	M8165933A20116
DSXE2PXMC3SS67S73	M8165933A20114
DSXE2RS106SS106S00	M8165935A20044
DSXE2RS106SS26P00	M8165935A20057
DSXE2RS106SS67P00	M8165935A20089
DSXE2RS106SXC8P00	M8165935A20087
DSXE2RS26PS106S00	M8165935A20059
DSXE2RS26PS26P00	M8165935A20003
DSXE2RS32C2PS106S00	M8165935A20129
DSXE2RS32C2PS40C1P00	M8165935A20121
DSXE2RS32C2PS45P00	M8165935A20123
DSXE2RS32C2PS57P00	M8165935A20125
DSXE2RS32C2PS67P00	M8165935A20127
DSXE2RS32C4PS106S00	M8165935A20151
DSXE2RS32C4PXC8P00	M8165935A20159
DSXE2RS33C4PS106S00**	M8165935A20105
DSXE2RS33C4PXC8P00**	M8165935A20107

DSX-SAE AS81659

RADIALL PART NUMBER	MIL PART NUMBER
DSXE2RS40C1PS40C1P00	M8165935A20131
DSXE2RS40PS40P00	M8165935A20011
DSXE2RS45PS45P00	M8165935A20019
DSXE2RS57PS106S00	M8165935A20133
DSXE2RS57PS26P00	M8165935A20147
DSXE2RS57PS57P00	M8165935A20027
DSXE2RS67PS106S00	M8165935A20071
DSXE2RS67PS67P00	M8165935A20035
DSXE2RXC8PS106S00	M8165935A20117
DSXE2RXC8PS32C4P00	M8165935A20155
DSXE2RXC8PS57P00	M8165935A20145
DSXE2RXMC2PS40C1P00	M8165935A20109
DSXE2RXMC2PS57P00	M8165935A20111
DSXE2RXMC3PS106S00	M8165935A20115
DSXE2RXMC3PS67P00	M8165935A20113
DSXE3PS106PS106PS106P73	M8165937A20045
DSXE3PS106PS106PS32C4S73	M8165937A20158
DSXE3PS106PS106PS67S73	M8165937A20092
DSXE3PS26SS26SS26S73	M8165937A20006
DSXE3PS40SS40SS40S73	M8165937A20014
DSXE3PS45SS45SS45S73	M8165937A20022
DSXE3PS57SS57SS57S73	M8165937A20030
DSXE3PS67SS106PS67S73	M8165937A20080
DSXE3PS67SS67SS106P73	M8165937A20076
DSXE3PS67SS67SS67S73	M8165937A20038
DSXE3PS67SS67SXC8S73	M8165937A20074
DSXE3PXC8SXC8SS106P73	M8165937A20068
DSXE3PXC8SXC8SXC8S73	M8165937A20066
DSXE3RS106SS106SS106S00	M8165939A20046
DSXE3RS106SS106SS32C4P00	M8165939A20157
DSXE3RS106SS106SS67P00	M8165939A20091
DSXE3RS26PS26PS26P00	M8165939A20005
DSXE3RS40PS40PS40P00	M8165939A20013
DSXE3RS45PS45PS45P00	M8165939A20021
DSXE3RS57PS57PS57P00	M8165939A20029
DSXE3RS67PS106SS67P00	M8165939A20079
DSXE3RS67PS67PS106S00	M8165939A20075
DSXE3RS67PS67PS67P00	M8165939A20037
DSXE3RS67PS67PXC8P00	M8165939A20073
DSXE3RXC8PXC8PS106S00	M8165939A20067
DSXE3RXC8PXC8PXC8P00	M8165939A20065
DSXE4PS106PS106PS106PS106P73	M8165941A20047
DSXE4PS106PS106PS67SS67S73	M8165941A20102

RADIALL PART NUMBER	MIL PART NUMBER
DSXE4PS106PS67SS106PSC8S73	M8165941A20098
DSXE4PS106PS67SSC8SSC8S73	M8165941A20100
DSXE4PS26SS26SS26SS26S73	M8165941A20008
DSXE4PS40SS40SS40SS40S73	M8165941A20016
DSXE4PS45SS45SS45SS45S73	M8165941A20024
DSXE4PS57SS57SS57SS57S73	M8165941A20032
DSXE4PS67SS67SS33C4SS33C4S73	M8165941A20082
DSXE4PS67SS67SS67SS67S73	M8165941A20040
DSXE4PSC8SSC8SS67SS67S73	M8165941A20086
DSXE4RS106SS106SS106SS106S00	M8165943A20048
DSXE4RS106SS106SS67PS67P00	M8165943A20101
DSXE4RS106SS67PS106SSC8P00	M8165943A20097
DSXE4RS106SS67PSC8PSC8P00	M8165943A20099
DSXE4RS106SSC8PS106SS106S00	M8165943A20095
DSXE4RS26PS26PS26PS26P00	M8165943A20007
DSXE4RS26PS26PS26S00	M8165943A20061
DSXE4RS40PS40PS40PS40P00	M8165943A20015
DSXE4RS45PS45PS45PS45P00	M8165943A20023
DSXE4RS57PS57PS57PS57P00	M8165943A20031
DSXE4RS67PS67PS67PS67P00	M8165943A20039
DSXE4RSC8PSC8PSC8PSC8P00	M8165943A20085
DSXN1PS106P73**	M8165965A20041
DSXN1PS26S73	M8165965A20002
DSXN1PS32C2S73	M8165965A20140
DSXN1PS32C4P73	M8165965A20149
DSXN1PS32C4S73	M8165965A20150
DSXN1PS33C4S73	M8165965A20104
DSXN1PS40C1S73	M8165965A20142
DSXN1PS40S73	M8165965A20010
DSXN1PS45P73	M8165965A20017
DSXN1PS45S73	M8165965A20018
DSXN1PS57P73	M8165965A20025
DSXN1PS57S73	M8165965A20026
DSXN1PS67S73	M8165965A20034
DSXN1PSD8S73	M8165965A20084
DSXN1PXC8S73	M8165965A20136
DSXN1RS106S00	M8165966A20042
DSXN1RS106S01	M8165967A20042
DSXN1RS106S23	M8165968A20042
DSXN1RS26P00	M8165966A20001
DSXN1RS26P01	M8165967A20001
DSXN1RS26P23	M8165968A20001
DSXN1RS32C2P00	M8165966A20139

DSX-SAE AS81659

RADIALL PART NUMBER	MIL PART NUMBER
DSXN1RS32C2P01	M8165967A20139
DSXN1RS32C2P23	M8165968A20139
DSXN1RS32C4P00	M8165966A20149
DSXN1RS32C4P01	M8165967A20149
DSXN1RS32C4P23	M8165968A20149
DSXN1RS33C4P00**	M8165966A20103
DSXN1RS33C4P01	M8165967A20103
DSXN1RS33C4P23	M8165968A20103
DSXN1RS40C1P00	M8165966A20141
DSXN1RS40C1P01	M8165967A20141
DSXN1RS40C1P23	M8165968A20141
DSXN1RS40P00	M8165966A20009
DSXN1RS40P01	M8165967A20009
DSXN1RS40P23	M8165968A20009
DSXN1RS45P00	M8165966A20017
DSXN1RS45P01	M8165967A20017
DSXN1RS45P23	M8165968A20017
DSXN1RS57P00	M8165966A20025
DSXN1RS57P01	M8165967A20025
DSXN1RS57P23	M8165968A20025
DSXN1RS57S00	M8165966A20026
DSXN1RS67P00	M8165966A20033
DSXN1RS67P01	M8165967A20033
DSXN1RS67P23	M8165968A20033
DSXN1RSD8P00	M8165966A20083
DSXN1RSD8P01	M8165967A20083
DSXN1RSD8P23	M8165968A20083
DSXN1RXC8P00	M8165966A20135
DSXN1RXC8P01	M8165967A20135
DSXN1RXC8P23	M8165968A20135
DSXN2PS106PS106P73	M8165969A20043
DSXN2PS106PS26S73	M8165969A20058
DSXN2PS106PS67S73	M8165969A20090
DSXN2PS106PXC8S73	M8165969A20088
DSXN2PS26SS106P73	M8165969A20060
DSXN2PS26SS26S73	M8165969A20004
DSXN2PS32C2SS106P73	M8165969A20130
DSXN2PS32C2SS40C1S73	M8165969A20122
DSXN2PS32C2SS45S73	M8165969A20124
DSXN2PS32C2SS57S73	M8165969A20126
DSXN2PS32C2SS67S73	M8165969A20128
DSXN2PS32C4SS106P73	M8165969A20152
DSXN2PS32C4SXC8S73	M8165969A20160

RADIALL PART NUMBER	MIL PART NUMBER
DSXN2PS33C4SS106P73**	M8165969A20106
DSXN2PS33C4SXC8S73**	M8165969A20108
DSXN2PS40C1SS40C1S73	M8165969A20132
DSXN2PS40SS40S73	M8165969A20012
DSXN2PS45SS45S73	M8165969A20020
DSXN2PS57SS106P73	M8165969A20134
DSXN2PS57SS26S73	M8165969A20148
DSXN2PS57SS57S73	M8165969A20028
DSXN2PS67SS106P73	M8165969A20072
DSXN2PS67SS67S73	M8165969A20036
DSXN2PXC8SS106P73	M8165969A20118
DSXN2PXC8SS32C4S73	M8165969A20156
DSXN2PXC8SS57S73	M8165969A20146
DSXN2PXMC2SS40C1S73	M8165969A20110
DSXN2PXMC2SS57S73	M8165969A20112
DSXN2PXMC3SS106P73	M8165969A20116
DSXN2PXMC3SS67S73	M8165969A20114
DSXN2RS106SS106S00	M8165970A20044
DSXN2RS106SS106S01	M8165971A20044
DSXN2RS106SS106S23	M8165972A20044
DSXN2RS106SS26P00	M8165970A20057
DSXN2RS106SS26P01	M8165971A20057
DSXN2RS106SS26P23	M8165972A20057
DSXN2RS106SS67P00	M8165970A20089
DSXN2RS106SS67P01	M8165971A20089
DSXN2RS106SS67P23	M8165972A20089
DSXN2RS106SXC8P00	M8165970A20087
DSXN2RS106SXC8P01	M8165971A20087
DSXN2RS106SXC8P23	M8165972A20087
DSXN2RS26PS106S00	M8165970A20059
DSXN2RS26PS106S01	M8165971A20059
DSXN2RS26PS106S23	M8165972A20059
DSXN2RS26PS26P00	M8165970A20003
DSXN2RS26PS26P01	M8165971A20003
DSXN2RS26PS26P23	M8165972A20003
DSXN2RS32C2PS106S00	M8165970A20129
DSXN2RS32C2PS106S01	M8165971A20129
DSXN2RS32C2PS106S23	M8165972A20129
DSXN2RS32C2PS40C1P00	M8165970A20121
DSXN2RS32C2PS40C1P01	M8165971A20121
DSXN2RS32C2PS40C1P23	M8165972A20121
DSXN2RS32C2PS45P00	M8165970A20123
DSXN2RS32C2PS45P01	M8165971A20123

DSX-SAE AS81659

RADIALL PART NUMBER	MIL PART NUMBER
DSXN2RS32C2PS45P23	M8165972A20123
DSXN2RS32C2PS57P00	M8165970A20125
DSXN2RS32C2PS57P01	M8165971A20125
DSXN2RS32C2PS57P23	M8165972A20125
DSXN2RS32C2PS67P00	M8165970A20127
DSXN2RS32C2PS67P01	M8165971A20127
DSXN2RS32C2PS67P23	M8165972A20127
DSXN2RS32C4PS106S00	M8165970A20151
DSXN2RS32C4PS106S01	M8165971A20151
DSXN2RS32C4PS106S23	M8165972A20151
DSXN2RS32C4PXC8P00	M8165970A20159
DSXN2RS32C4PXC8P01	M8165971A20159
DSXN2RS32C4PXC8P23	M8165972A20159
DSXN2RS33C4PS106S00	M8165970A20105
DSXN2RS33C4PS106S01	M8165971A20105
DSXN2RS33C4PS106S23	M8165972A20105
DSXN2RS33C4PXC8P00	M8165970A20107
DSXN2RS33C4PXC8P01	M8165971A20107
DSXN2RS33C4PXC8P23	M8165972A20107
DSXN2RS40C1PS40C1P00	M8165970A20131
DSXN2RS40C1PS40C1P01	M8165971A20131
DSXN2RS40C1PS40C1P23	M8165972A20131
DSXN2RS40PS40P00	M8165970A20011
DSXN2RS40PS40P01	M8165971A20011
DSXN2RS40PS40P23	M8165972A20011
DSXN2RS45PS45P00	M8165970A20019
DSXN2RS45PS45P01	M8165971A20019
DSXN2RS45PS45P23	M8165972A20019
DSXN2RS57PS106S00	M8165970A20133
DSXN2RS57PS106S01	M8165971A20133
DSXN2RS57PS106S23	M8165972A20133
DSXN2RS57PS26P00	M8165970A20147
DSXN2RS57PS26P01	M8165971A20147
DSXN2RS57PS26P23	M8165972A20147
DSXN2RS57PS57P00	M8165970A20027
DSXN2RS57PS57P01	M8165971A20027
DSXN2RS57PS57P23	M8165972A20027
DSXN2RS67PS106S00	M8165970A20071
DSXN2RS67PS106S01	M8165971A20071
DSXN2RS67PS106S23	M8165972A20071
DSXN2RS67PS67P00	M8165970A20035
DSXN2RS67PS67P01	M8165971A20035
DSXN2RS67PS67P23	M8165972A20035

RADIALL PART NUMBER	MIL PART NUMBER
DSXN2RXC8PS106S00	M8165970A20117
DSXN2RXC8PS106S01	M8165971A20117
DSXN2RXC8PS106S23	M8165972A20117
DSXN2RXC8PS32C4P00	M8165970A2-0155
DSXN2RXC8PS32C4P01	M8165971A20155
DSXN2RXC8PS32C4P23	M8165972A20155
DSXN2RXC8PS57P00	M8165970A20145
DSXN2RXC8PS57P01	M8165971A20145
DSXN2RXC8PS57P23	M8165972A20145
DSXN2RXMC2PS40C1P01	M8165971A20109
DSXN2RXMC2PS40C1P23	M8165972A20109
DSXN2RXMC2PS57P00	M8165970A20111
DSXN2RXMC2PS57P01	M8165971A20111
DSXN2RXMC2PS57P23	M8165972A20111
DSXN2RXMC2S40C1P00	M8165970A20109
DSXN2RXMC3PS106S00	M8165970A20115
DSXN2RXMC3PS106S01	M8165971A20115
DSXN2RXMC3PS106S23	M8165972A20115
DSXN2RXMC3PS67P00	M8165970A20113
DSXN2RXMC3PS67P01	M8165971A20113
DSXN2RXMC3PS67P23	M8165972A20113
DSXT1RS106S00	M8165961A20042
DSXT1RS26P00	M8165961A20001
DSXT1RS32C2P00	M8165961A20139
DSXT1RS32C4P00	M8165961A20149
DSXT1RS33C4P00	M8165961A20103
DSXT1RS40C1P00	M8165961A20141
DSXT1RS40P00	M8165961A20009
DSXT1RS45P00	M8165961A20017
DSXT1RS57P00	M8165961A20025
DSXT1RS67P00	M8165961A20033
DSXT1RSD8P00	M8165961A20083
DSXT1RXC8P00	M8165961A20135
DSXT2RS106SS106S00	M8165962A20044
DSXT2RS106SS26P00	M8165962A20057
DSXT2RS106SS67P00	M8165962A20089
DSXT2RS106SXC8P00	M8165962A20087
DSXT2RS26PS106S00	M8165962A20059
DSXT2RS26PS26P00	M8165962A20003
DSXT2RS32C2PS106S00	M8165962A20129
DSXT2RS32C2PS40C1P00	M8165962A20121
DSXT2RS32C2PS45P00	M8165962A20123
DSXT2RS32C2PS57P00	M8165962A20125

DSX-SAE AS81659

RADIALL PART NUMBER	MIL PART NUMBER
DSXT2RS32C2PS67P00	M8165962A20127
DSXT2RS32C4PS106S00	M8165962A20151
DSXT2RS32C4PXC8P00	M8165962A20159
DSXT2RS33C4PS106S	M8165962A20105
DSXT2RS33C4PXC8P00	M8165962A20107
DSXT2RS40C1PS40C1P00	M8165962A20131
DSXT2RS40PS40P00	M8165962A20011
DSXT2RS45PS45P00	M8165962A20019
DSXT2RS57PS106S00	M8165962A20133
DSXT2RS57PS26P00	M8165962A20147
DSXT2RS57PS57P00	M8165962A20027
DSXT2RS67PS106S00	M8165962A20071
DSXT2RS67PS67P00	M8165962A20035
DSXT3RS106SS106SS67P00	M8165963A20091
DSXT3RS26PS26PS26P00	M8165963A20005
DSXT3RS40PS40PS40P00	M8165963A20013
DSXT3RS45PS45PS45P00	M8165963A20021
DSXT3RS57PS57PS57P00	M8165963A20029

RADIALL PART NUMBER	MIL PART NUMBER
DSXT3RS67PS106SS67P00	M8165963A20079
DSXT3RS67PS67PS106S00	M8165963A20075
DSXT3RS67PS67PS67P00	M8165963A20037
DSXT3RS67PS67PXC8P00	M8165963A20073
DSXT3RXC8PXC8PS106S00	M8165963A20067
DSXT3RXC8PXC8PXC8P00	M8165963A20065
DSXT4RS106SS106SS106SS106S00	M8165964A20048
DSXT4RS106SS106SS67PS67P00	M8165964A20101
DSXT4RS106SS67PS106SSC8P00	M8165964A20097
DSXT4RS106SS67PSC8PSC8P00	M8165964A20099
DSXT4RS106SSC8PS106SS106S00	M8165964A20095
DSXT4RS26PS26PS26PS26P00	M8165964A20007
DSXT4RS40PS40PS40PS40P00	M8165964A20015
DSXT4RS45PS45PS45PS45P00	M8165964A20023
DSXT4RS57PS57PS57PS57P00	M8165964A20031
DSXT4RS67PS67PS33C4PS33C4P00	M8165964A20081
DSXT4RSC8PSC8PS67PS67P00	M8165964A20085

DSX-F

HOW TO ORDER DSX-F CONNECTORS

DSX

SERIES PREFIX

CLASS
F: Front release front removable contacts, inserts without interfacial seal
K: Front release front removable contacts, inserts with interfacial seal

SHELL SIZE
1: One gang shell
2: Two gang shell
3: Three gang shell
4: Four gang shell

SHELL TYPE
R: Receptacle
A: Plug

TERMINATION STYLE [5]
X: Without contacts
V: Wire wrap two levels
W: Wire wrap three levels
Y: PC tail contact

CONTACT ARRAGEMENT [1, 2 & 5]
To be chosen among the following: [4]
26-40-45-57-67-33C4-106-81C3

CONTACT TYPE
S: Socket
P: Pin

GANG B

GANG C

GANG D

MODIFICATION CODE
See pages 7-11 to 7-16 for selection.

POLARIZATION CODE [3]
See pages 7-17 to 7-20 for selection.

For technical characteristics please see page 7-5.

Notes

1. For mixed contact arrangements, order coax contacts separately see contacts available on pages 7-24 to 7-26. Coax contacts are rear release rear removable.
2. For 33C4 and 67 contact arrangements, size 16 contacts cavities are for front release front removable contacts. Size 16 contacts are to be ordered separately.
3. Without polarization code the connector is delivered with the polarizing system unassembled.
Polarization code 00: the connector is delivered without polarizing system.
Polarization code from 01 to 216: the connector is delivered with polarization hardware assembled as defined by code.
4. Contact arrangement 26 and 40 available only in class F connector version.
5. Gang A

DSX-F

CONTACTS

CONTACTS WITH PC TAIL SIZES 22, 20 HD & 16

Contacts are delivered installed in the connector.

CONTACT SIZE	CONTACT ARRANGEMENT	PIN	SOCKET	INS/EXT TOOL	DIMENSIONS MM (INCH)	
					A	B
22	81C3 -106	-	620361	282500	5.95/6.75 (0.234/0.265)	0.6 +/-0.03 (0.023)
20HD	40-45-67-33C4-57	616220	-	282503	4.3/5.1 (0.169/0.200)	
16 [1]	26-67-33C4	616235	-	282504		Max. 1 (0.039)
		616235010	-		3.55/4.32 (0.140/0.170)	
		616234	-		10.20/11 (0.400/0.433)	

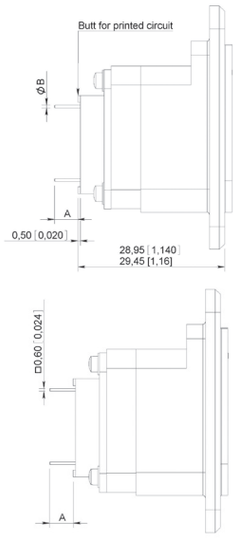

SIZE 8 PIN QUADRAX CONTACTS

PART NUMBER	CONTACT TERMINATION	DIMENSION X (MM INCH)	INS/EXT TOOL
620176008	Y	7.20/6.40 90.283/0.2520	282549009

CONTACTS WITH WIRE WRAP POST SIZES 22 & 20 HD

Contacts are delivered installed in the connector. For 67 and 33C4 contact arrangements, front release front removable size 12 and 16 contacts are not delivered with the connector. They must be ordered separately and chosen among size 16 PC tail contacts and 616326 size 16 solder cup contact (rear extension from insert: 4.4/5.2 (0.173/0.204).

CONTACT SIZE	AWG	CONTACT ARRANGEMENT	PIN	SOCKET	INS/EXT TOOL	DIMENSIONS A MM (INCH)
22	26 28 30	106	-	620351 (2 Wraps Levels)	282500	9.45/10.45 (0.372/0.412)
				620352 (3 Wrap Levels)		12.75/13.75 (0.502/0.541)
20 HD	26 28 30	40-45-67-33C4-57	616222 (2 Wraps Levels)	-	282503	10/11 (0.394/0.433)
			616224 (3 Wrap Levels)			13.3/14.3 (0.523/0.563

COAXIAL CRIMP CONTACTS FOR 33C4 CONTACT ARRANGEMENTS SIZE 5

These coaxial contacts are rear release rear removable and designed to be installed in 33C4 and 81C3 contact arrangement class F or K. They must be ordered separately.

CONTACT SIZE	CONTACT ARRANGEMENT	CABLE	PIN	SOCKET	CENTER CONTACT			OUTER BODY		
					CRIMPING TOOL	POSITIONER	SEL.	CRIMPING TOOL	DIE	HEX
5	33C4 81C3	Microdot 250.39.37	616126	-	282281 (M22550/2-01)	282974	6	282293 (M22520/5-01)	282246 (M22520/5-05)	B
		RG 178 KX 21	616127	-						

EN4531-101 (ABS 1379) ADAPTER FOR SIZE 5 CAVITY

Radiall offers a unique solution to equip your DSX connectors with EN4531 fiber optic contacts. The adapter will turn a ARINC 404 size 5 cavity into a fiber optic link, using EN4531-101 fiber optic contacts.

EN4531-101 adapter for size 5 cavity is available for DSX F connectors with inserts 33C4 and 81C3 only, see page 7-28.

Notes

1. Front release front removable size 16 contacts PC tail termination are installed only for 26 contact arrangement (which is fitted with 616235 contacts). For 67 and 33C4, contact arrangements front release front removable size 16 contacts must be ordered separately

DSX-DATA Bus

HOW TO ORDER DSX-DATA BUS CONNECTORS

DSX

SERIES PREFIX

CLASS
N: Non-environmental (without grommet and interfacial seal)
E: Environmental (with grommet and interfacial seal)
T: Connector with interfacial seal on insert with protruding contacts only

SHELL SIZE
1: One gang shell
2: Two gang shell
3: Three gang shell
4: Four gang shell

SHELL TYPE
R: Receptacle
A: Plug

GANG A BUS CONTRACT ARRANGEMENT [1]

GANG B CONTRACT ARRANGEMENT

MODIFICATION CODE
See pages 7-11 to 7-16 for selection.

POLARIZATION CODE
See pages 7-17 to 7-20 for selection.

For technical characteristics please see pages 7-5.
For any additional information ask for the RP2667 DSX Data Bus from Radiall.

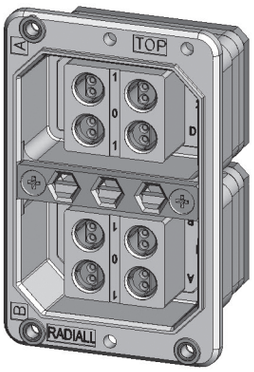

Notes
1. Data bus contact arrangements have no interfacial seal and no rear grommet.

DSX-DATA Bus

CONTACT ARRANGEMENTS

PIN INSERT MATING SIDE SHOWN–ALL INSERTS DWV 1000 V AC

INSERT NAME	NUMBER OF CONTACTS	INSERT NAME	NUMBER OF CONTACTS
B2TP1– H2TP1	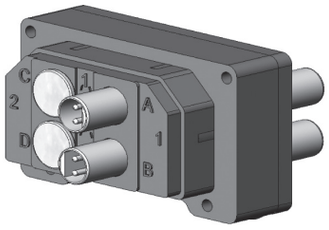 2 × Twinax Location A, B	B2S1	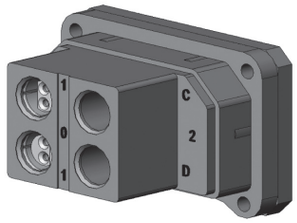 2 × Twinax Location A, B
B2TP2– H2TP2	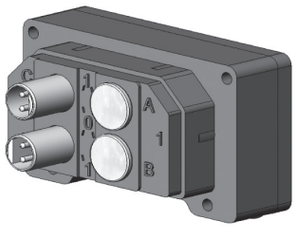 2 × Twinax Location C, D	B2S2	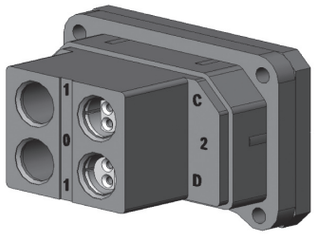 2 × Twinax Location C, D
B4TP– H4TP	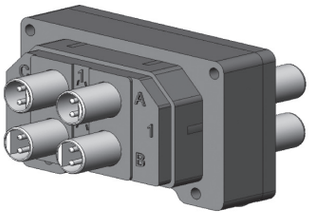 4 × Twinax Location A, B, C, D	B4S	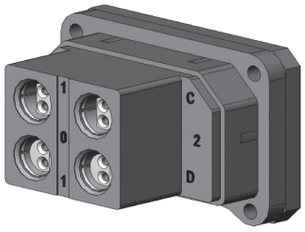 4 × Twinax Location A, B, C, D
S42B2P	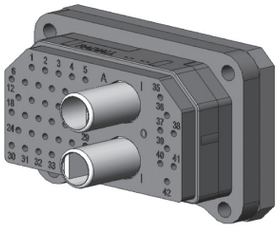 2 × Twinax 42 × #20 HD Location A, B	S42B2S	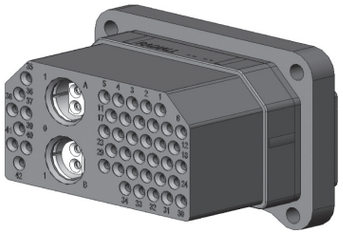 2 × Twinax 42 × #20 HD Location A, B

DIMENSIONS

B2TP, H2TP, B4TP & H4TP AIRCRAFT CONNECTOR

The aircraft connector is comprised of two sub assemblies

1. A plug shell fitted with an insert incorporating 2 (B2TP or H2TP) or 4 (B4TP or H4TP) twinax pin contacts.
2. One or two connection plugs depending on the number of BUS lines (B2 or B4). If there are two BUS lines (B2TP or H2TP) the two twinax contacts and the connection plug can be installed either in position 1 (B2TP1 or H2TP1) or in position 2 (B2TP2 or H2TP2).

The difference between B2TP1 and H2TP1, B2TP2 and H2TP2, B4TP and H4TP depends on the shielded twisted pairs cable that is used.

For Fileca F2709/12 cable the designation used are B2TP1, B2TP2, B4TP.
Description: differential impedance = 75 ± 5Ω
Shielded twisted pair (each conductor = AWG 20) Outer diameter = 5.35 mm (0.206 inch max)

For Fileca F2709/9 cable the designation used are H2TP1, H2TP2, H4TP.
Description: differential impedance = 75 ± 5Ω
Shielded twisted pair (each conductor = AWG 22) Outer diameter = 4.80 mm (0.189 inch max)

MATING FACE

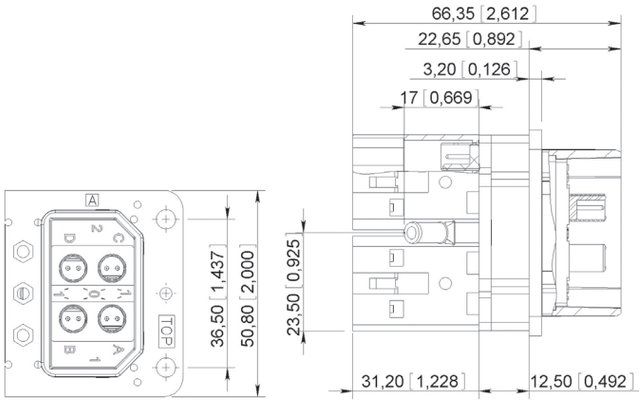

WIRING REAR FACE

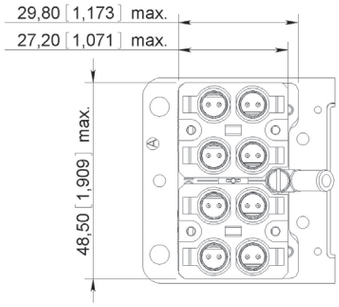

B2TP, H2TP, B4TP & H4TP EQUIPMENT CONNECTOR

The equipment connector is comprised of one receptacle shell fitted with an insert incorporating 2 (B2S) or 4 (B4S) twinax socket contacts.

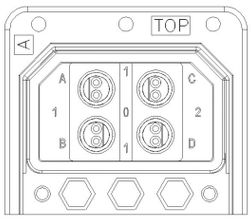

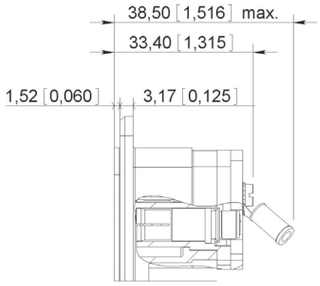

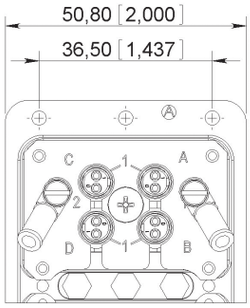

DSX-DATA Bus

S42B2P AIRCRAFT CONNECTOR

The aircraft connector is comprised of a plug shell fitted with a S42B2P insert.

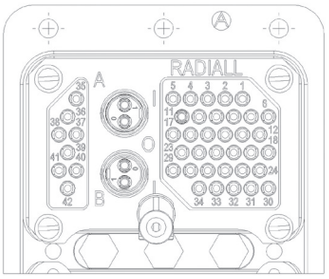

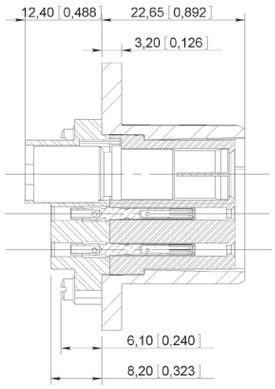

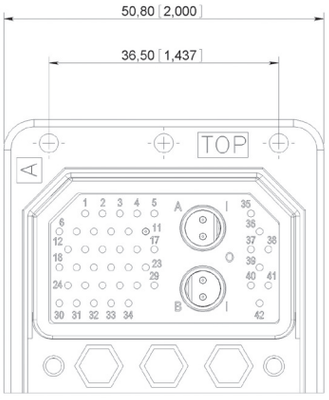

S42B2P EQUIPMENT CONNECTOR

The equipment connector is comprised of a receptacle shell fitted with a S42B2P insert.

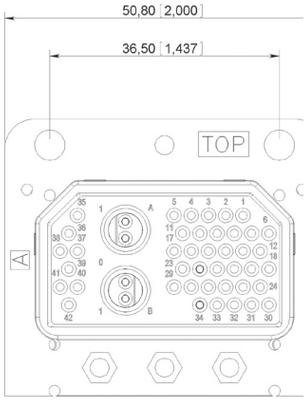

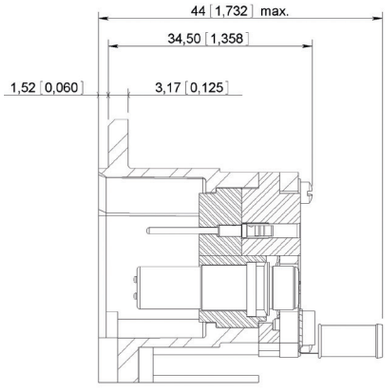

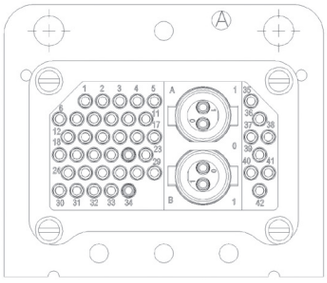

CONTACTS

TWINAX

CONTACT SIZE	CABLE	PIN	SOCKET	CENTER CONTACT			OUTER BODY	
				CRIMPING TOOL	POSITIONER	SEL.	CRIMPING TOOL	DIE
B2TP B4TP	F2709/12	-	616090	282281 (M22520/2-01)	282959	7	282293 (M22520/5-01)	282248 OCETA M1001
H4TP H2TP 42B2S	F2709/9	-	616091			8		
B4S B2S	AWG 20 AWG 22 AWG 24	-	616092			7 6 5	N/A	
42B2P	AWG 20 AWG 22 AWG 24	616192	-			7 6 5		

DSX-ARINC 404 Shell Type B

HOW TO ORDER ARINC 404 SHELL TYPE B CONNECTORS

DSX

SERIES PREFIX

SHELL SIZE
1: One gang shell
2: Two gang shell
3: Three gang shell
4: Four gang shell

SHELL TYPE
G: Receptacle
H: Plug

GANG A-CONTACT ARRANGEMENT
See available contact arrangements on pages 7-49 and 7-50.

TERMINATION STYLE [2 & 3]
X: Without contacts
S: Crimp [1]
Z: Fixed solder cup
K: Wire wrap one level [5]
V: Wire wrap two levels [5]
W: Wire wrap three levels [5]
Y: PC tail contact [5]

GANG B

GANG C

GANG D

MODIFICATION CODE
See pages 7-11 to 7-16 for selection.

POLARIZATION CODE [4]
See pages 7-17 to 7-20 for selection.

CONTACT ARRANGEMENT CODE TABLE

	00	8	13	26	40	45	57	67	106	32C2	32C4	40C1	C2	C3	C8	D8
Insert for Pin Contacts	10	12	44	14	16	18	20	22	24	26	40	28	34	36	30	38
Insert for Socket Contacts	11	13	45	15	17	19	21	23	25	27	41	29	35	37	31	39

Notes
1. If you need to use reduced crimp barrel contacts, use code X and order contacts separately.
2. For C2, C3 and C8 contact arrangements which include coax contacts, use termination code X and order coax contacts separately.
3. For mixed layout 32C2, 32C4 and 40C1, the connector is delivered with signal and power contacts but without coax contacts. Order coaxial contacts separately.
4. Without polarization code: the connector is delivered with polarizing system unassembled.
Polarization code 00: the connector is delivered without polarizing system.
Polarization code from 01 to 216: the connector is delivered with the polarization hardware assembled as defined by code.
5. For contact arrangement 67 and 32C4 with K, V, W or Y termination styles, size 16 contacts are crimp contacts shipped loose with the connector.

DSX-ARINC 404 Shell Type B

TECHNICAL CHARACTERISTICS

MATERIALS

DESCRIPTION	MATERIAL	PLATING
Shell	Aluminium Alloy	Cadmium Yellow Chromate [1]
Insert	Thermosetting Resin	-
Metallic Insert	Aluminium Alloy	Cadmium Clear Chromate
Rear Spacer	Silicone Rubber	-
Retention Clip	Copper Alloy	-
Contact	Copper Alloy	Gold over Nickel Under Plate
Insert Retention Plate	Aluminium Alloy	Yellow Anodized
Insert Retention Plate with Attaching Tabs	Aluminium Alloy	Cadmium Yellow Chromate [1]
Polarizing Posts	Stainless Steel	-
Polarizing Keys	Zinc Alloy	Cadmium Yellow Chromate [1]
Polarizing Keys Retention Plate	Aluminium Alloy	Yellow Anodised [1]
Screws, Washers, Clinch-Nuts	Corrosion Resistant Steel	-

ELECTRICAL CHARACTERISTICS

They are the same as those described for SAE AS81659 connectors on page 7-5.

MECHANICAL & ENVIRONMENTAL CHARACTERISTICS

These characteristics are the same as described in SAE AS81659, with the exception that the altitude moisture test is not performed. This test is replaced by a moisture resistance test performed according to method 1002.2 type II of MIL-STD-1344A.

Notes

1. More platings are available, see descriptions in modification codes

DSX-ARINC 404 Shell Type B

CONTACT ARRANGEMENTS

Pin insert mating side is shown below in the table.

INSERT NAME	NUMBER OF CONTACTS	DWV	TERMINATION AVAILABILITY	INSERT NAME	NUMBER OF CONTACTS	DWV [1]	TERMINATION AVAILABILITY
8	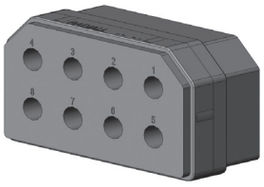 8 × #12	1,500 V–60 Hz	S- Z	45	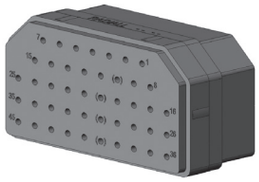 45 × #20	1,500 V–60 Hz	For Pin S-Z-Y-K-V-W For Socket S-Z-W
13	13 × #16	1,800 V–60 Hz	S-Z For Pin	57	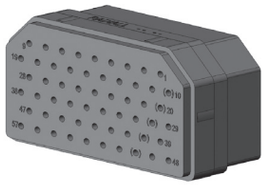 57 × #20	1,500 V–60 Hz	For Pin S-Z-Y-K-V-W For Socket S-Z-W
D8	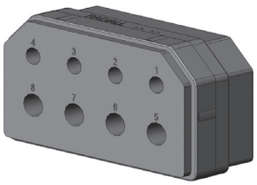 4 × #16 4 × #12	1,500 V–60 Hz	S–Z	67	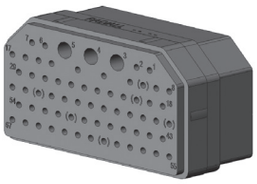 64 × #20 HD 3 × #16	1,000 V–60 Hz	For Pin S-Z-Y-K-V-W For Socket S-Z-W
26	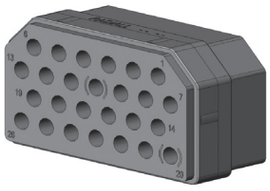 26 × #16	1,500 V–60 Hz	For Pin S-Z-K For Socket S-Z	106	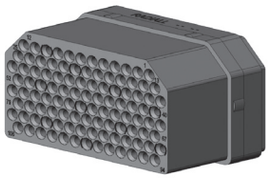 106 × #22	1,000 V–60 Hz	S-Y-V-W
40	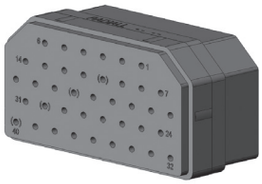 40 × #20	1,500 V–60 Hz	For Pin S-Z-Y-K-V-W For Socket S-Z-W	40C1	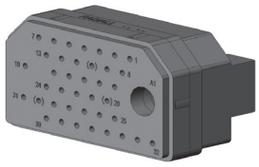 1 × #5 (Coax) 39 × #20	1,500 V–60 Hz	For Pin S-Z-Y-K-V-W For Socket S-Z-W

Notes

1. Dieletric withstanding voltage

DSX-ARINC 404 Shell Type B

INSERT NAME	NUMBER OF CONTACTS	DWV	TERMINATION AVAILABILITY	INSERT NAME	NUMBER OF CONTACTS	DWV	TERMINATION AVAILABILITY
32C2	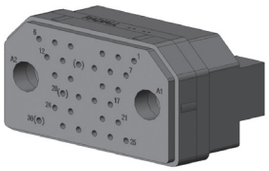 2 × #5 (Coax) 30 × #20	1,500 V–60 Hz 1,000 V for Coax Cavity	For Pin S-Z-Y-K-V-W For Socket S-Z-W	C3	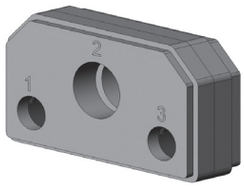 2 × #7 (Coax) 1 × #3	Metallic	S
32C4	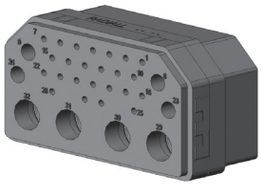 4 × #9 (Coax) 4 × #16 24 × #20	1,500 V–60 Hz 1,000 V for Coax Cavity	For Pin S-Z-Y-K-V-W For Socket S-Z-W	C8	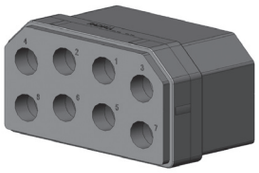 8 × #9 (Coax)	1,000 V–60 Hz	S
C2	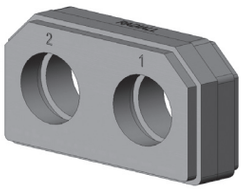 2 × #1 (Coax)	Metallic	S	00	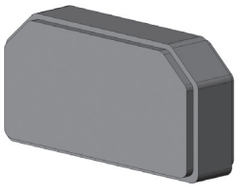	-	Dummy Insert

DSX-ARINC 404 Shell Type B

CONTACTS

SIGNAL AND POWER CRIMP CONTACTS SIZES 22, 20 HD,16 & 12

CONTACT SIZE	WIRE				PIN RADIALL P/N MIL P/N	SOCKET RADIALL P/N MIL P/N	CRIMPING TOOL	POSITIONER	SEL.	INS/EXT TOOL
	AWG	CROSS SECTION (MM)	WIRE OUTSIDE DIA. (INCH)	STRIPING LENGTH MM (INCH)						
22	22 24 26	0.38 0.21 0.14	1.4 (0.055)	3.05 (0.138)	616200 (MIL 39029/ 11-144)	616300 (MIL 39029/ 12-148)	282281 (M22520/2-23)	282970 (M22520/2-23)	4 3 3	282885 (M81969/1-01)
22 Reduced Crimp Barrel	28 30	0.093 0.055	1.4 (0.055)	3.05 (0.138)	616201	616301			5 4	
20 HD	20 22 24	0.60 0.38 0.21	1.8 (0.071)	4.0 (0.157)	616210 (MIL 39029/ 11-145)	616310 (MIL 39029/ 12-149)		282971 (M22520/2-08)	7 6 5	282886 (M81969/1-02)
20 HD Reduced Crimp Barrel	26 28 30	0.14 0.093 0.055	1.8 (0.071)	4.0 (0.157)	616211	616311			6 5 4	
20	20 22 24	0.60 0.38 0.21	1.8 (0.071)	4.0 (0.157)	610220	610325	282971 (M22520/1-01)	282972 (M22520/1-02)	4 3 3	282943
20 Reduced Crimp Barrel	26 28 30	0.14 0.093 0.055	1.8 (0.071)	4.0 (0.157)	610221	610321			3 3 2	
16	16 18 20	1.34 0.93 0.60	2.6 (0.102)	6.0 (0.236)	616230 (MIL 39029/ 11-146)	616330 (MIL 39029/ 12-150)			6 5 4	282546 (M81969/1-03)
16 Reduced Crimp Barrel	20 22 24	0.60 0.38 0.21	2.6 (0.102)	6.0 (0.236)	616231	616331			5 5 4	
12	12 14 16	3.18 1.91 1.34	3.4 (0.134)	6.0 (0.236)	616240 (MIL 39029/ 11-174)	616340 (MIL 39029/ 12-151)		282579 (M22520/1-11)	8 7 6	282547 (M81969/ 28-02)

PC TAIL CONTACTS SIZES 22, 20HD & 20 PC TAIL CONTACTS

PC tail contacts are delivered installed in the connector. Connectors with PC tail contacts have no wire separator. For 32C4 and 67 contact arrangements, size 16 contacts are delivered in crimp termination and are shipped loose with the connector.

CONTACT SIZE	CONTACT ARRANGEMENT	PIN	SOCKET	EXTRACTION TOOL	DIMENSIONS MM (INCH)				
					Y	B	DIA	D	E
22	106	616206 [1]	616379	282890	6.1/5.3 (0.240/0.209)	6.5 (0.256)	0.6 (0.023)	25.25/25.75 (0.0994/1.013)	1.55/1.75 (0.061/0.069)
		-	616303		14.4/13.6 (0.567/0.535)	9.4 (0.370)			
		-	616306 [1]		5.9/6.7 (0.232/0.263)	3.8 (0.149)			
20HD	67	610216 [1]	/	282891	5.75/6.65 (0.226/0.262)	/	0.8 (0.031)	29.20/29.80 (1.149/1.173)	5.40/5.80 (0.212/0.228)
	32C4	-	-		6.35/7.55 (0.250/0.297)			29.70/30.30 (1.169/1.192)	
	67	610219	-		3.35/4.25 (0.131/0.168)		0.75 (0.029)	29.20/29.80 (1.149/1.173)	
	32C4	-	-		3.95/5.15 (0.155/0.203)			29.70/30.30 (1.169/1.192)	
20	40-45-57 32C2-40C1	610226 [1]	/	282943	6.10/7.40 (0.240/0.291)	/	0.8 (0.031)	28.55/29.15 (1.124/1.147)	5.40/5.80 (0.212/0.228)

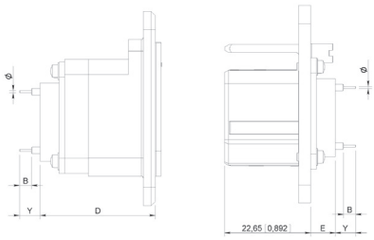

Notes

1. Connectors delivered in the "Y" termination style will be fitted with contacts marked by "[1]". If you want to use another kind of PC tail contact use termination "x" when ordering the connector and order contacts separately.

DSX-ARINC 404 Shell Type B

CONTACTS WITH WIRE WRAP POST SIZES 22, 20 HD & 20

Wire wrap contacts are delivered installed in the connector. Connectors with wire wrap contacts have no wire separator. For 32C4 and 67 contact arrangements, size 16 contacts are delivered in crimp termination and are shipped loose with the connector.

CONTACT SIZE	AWG	CONTACT ARRANGEMENT	PIN	SOCKET	EXTRACTION TOOL	DIMENSIONS MM (INCH)				
						D	E	K (1 WRAP)	V (2 WRAP)	W (3 WRAP)
22	26 28 30	106	610203 (2 Wrap Levels) 610204 (3 Wrap Levels)	610303 (2 Wrap Levels) 610304 (3 Wrap Levels)	282948	25.25/25.75 (0.0994/1.013)	1.55/1.75 (0.061/0.069)	-	10/11 (0.394/0.433)	12.50/13.50 (0.492/0.531)
20 HD	26 28 30	67	610217 (1 Wrap Level) 610215 (2 Wrap Levels) 610214 (3 Wrap Levels)	-		28.8/29.2 (1.133/1.150)	5.40/5.80 (0.212/0.228)	6.35/7.35 (0.250/0.289)	9.35/10.35 (0.368/0.407)	11.85/12.85 (0.466/0.506)
		32C4				29.70/30.30 (1.169/1.192)	5.40/5.80 (0.212/0.228)	6.95/8.25 (0.273/0.325)	9.95/11.25 (0.391/0.443)	12.45/13.75 (0.490/0.541)
20	26 28 30	40-45-57 32C2-40C1	610228 (1 Wrap Level) 610225 (2 Wrap Levels) 610224 (3 Wrap Levels)	-	282949	28.55/29.15 (1.147/1.124)	5.40/5.80 (0.212/0.228)	6.95/8.25 (0.273/0.325)	9.95/11.25 (0.391/0.443)	12.60/13.8 (0.496/0.543)

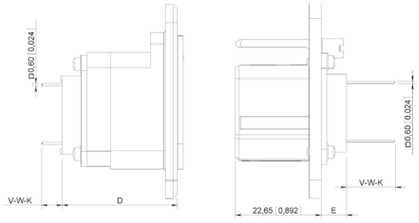

SOLDER CUP CONTACT SIZES 20HD, 20, 16 & 12

Solder cup contacts are fixed contacts delivered installed in the connector. Connectors with solder cup contacts have no wire separator.

CONTACT SIZE	CONTACT ARRANGEMENT	STRIPPING LENGTH	DIMENSIONS MM (INCH)		
			A	D	E
20 HD	67	2.5 (0.098)	3 (0.118)	29.20/29.80 (1.149/1.173)	5.40/5.80 (0.212/0.228)
	32C4			29.70/30.30 (1.169/1.192)	
20	40-45-57- 32C2-40C1			28.55/29.15 (1.124/1.147)	
16	26-67	5 (0.197)	4.5 (0.177)	29.20/29.80 (1.149/1.173)	
	32C4			29.70/30.30 (1.169/1.192)	
12	8-D8			28.55/29.15 (1.124/1.147)	

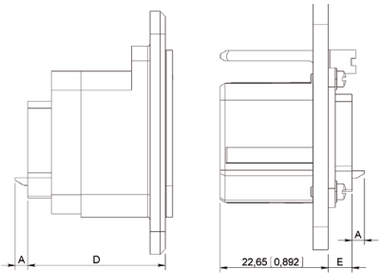

DSX-ARINC 404 Shell Type B

THERMOCOUPLE CONTACT SIZES 22 & 20HD

Refer to page 7-22.

FIBER OPTIC TERMINI SIZES 16 & 12

Refer to page 7-23.

COAXIAL CRIMP CONTACT SIZE 1

CONTACT SIZE	CONTACT ARRANGEMENT	CABLE	PIN	SOCKET	CENTER CONTACT			OUTER BODY		
					CRIMPING TOOL	POSITIONER	SEL.	CRIMPING TOOL	DIE	HEX
1	C2	UT 141 RG 402	616005	-	Solder Contact					
		RG 58 RG 141 KX 15	616005 Right Angle	-	Solder Contact			282293 (M22520/5-01)	282246 (M22520/5-05)	A
		RG 214 RG 225	-	610108				-	282247 (M22520/5-61)	A
		SMA	616009	-	SMA Termination					

COAXIAL CRIMP CONTACT SIZE 3

CONTACT SIZE	CONTACT ARRANGEMENT	CABLE	PIN	SOCKET	CENTER CONTACT			OUTER BODY		
					CRIMPING TOOL	POSITIONER	SEL.	CRIMPING TOOL	DIE	HEX
3	C3	RG 214 RG 225	-	610118	Solder			282293 (M22520/5-01)	282247 (M22520/5-61)	A
		UT 141 RG 402	616014	-	Solder Contact					

Dielectric Withstanding Voltage at Sea Level: 1,500 Vrms

COAXIAL CRIMP CONTACT SIZE 5

CONTACT SIZE	CONTACT ARRANGEMENT	CABLE	PIN	SOCKET	CENTER CONTACT			OUTER BODY		
					CRIMPING TOOL	POSITIONER	SEL.	CRIMPING TOOL	DIE	HEX
5	32C2 40C1	RG 58 RG 141 KX 15	610120	610020001	Solder			282293 (M22520/5-01)	282246 (M22520/5-05)	A
		RG 142 RG 223 KX 23	610122	610022001						
		RG 316 KX 22	610126	610026						B
		KX 21 DT	610127	-						
		RG 178	610119	-						
		UT 085	610123	-						
		UT 141	616009	-	Solder					

Extraction Tool: 282946 (M81969/28-01)

Notes

For other cables, please consult Radiall.

DSX-ARINC 404 Shell Type B

COAXIAL CRIMP CONTACT SIZE 7

CONTACT SIZE	CONTACT ARRANGEMENT	CABLE	PIN	SOCKET	CENTER CONTACT			OUTER BODY		
					CRIMPING TOOL	POSITIONER	SEL.	CRIMPING TOOL	DIE	HEX
7	C3	RG 58 RG 141 KX 15	610120	610020001	Solder			282293 (M22520/ 5-01)	282246 (M22520/ 5-05)	A
		RG 174 RG 316 RG 188	610126	610026						

Extraction Tool: 282946 (M81969/28-01)
Dielectric Withstanding Voltage at Sea Level: 750 Vrms

COAXIAL CRIMP CONTACT SIZE 9

CONTACT SIZE	CONTACT ARRANGEMENT	CABLE	PIN	SOCKET	CENTER CONTACT			OUTER BODY		
					CRIMPING TOOL	POSITIONER	SEL.	CRIMPING TOOL	DIE	HEX
9	C8 32C4	RG 316 KX 22	610146	610046	Solder			282293 (M22520/ 5-01)	282246 (M22520/ 5-05)	B
		RG 178 KX 21	610147	610047						
		RG 58 RG 141 KX 15	610140	610040						A
		RG 142	610149	610049						
		S280W 503-2	-	610044	282281 (M22520/ 2-01)	DANIELS K345	6		282236 (M22520/ 5-45)	B
		UT 085	610148	-	Solder					

Extraction Tool: 282946 (M81969/28-01)

ACCESSORIES

FILLER PLUGS

DESIGNATION	FILLER PLUGS PART NUMBER
Size 22 (Black)	620920
Size 20 (White)	610940
Size 20HD (Red)	610941
Size 16 (Blue)	620922
Size 12 (Yellow)	616923
Size 5 (White)	616802
Size 9 (White)	616802

Notes
For other cables, please consult Radiall.
For dust caps and backshells, please refer to page 7-29 and 7-30.

DSX-ARINC 404 Shell Type B

DIMENSIONS

SHELL SIZE 1

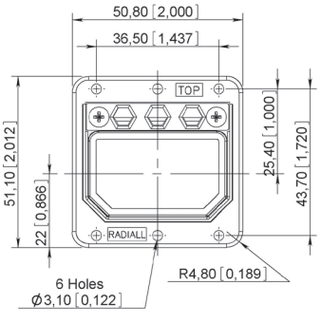

RECEPTACLE

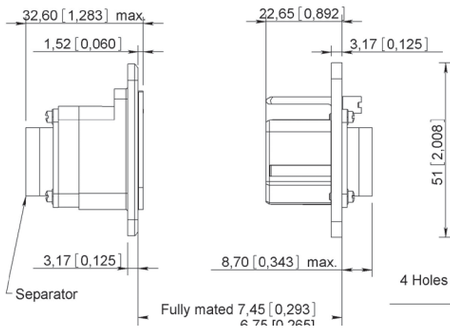

PLUG

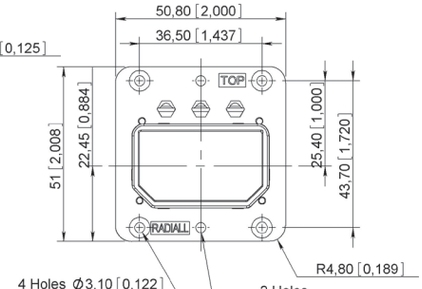

SHELL SIZE 2

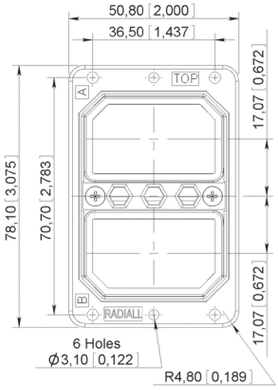

RECEPTACLE

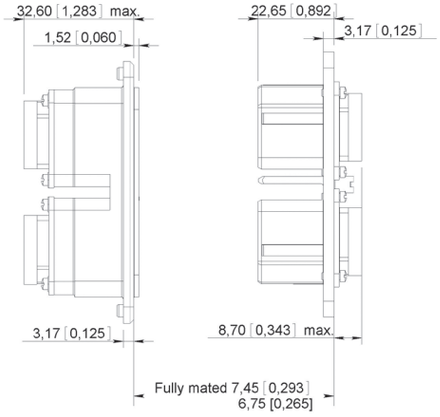

PLUG

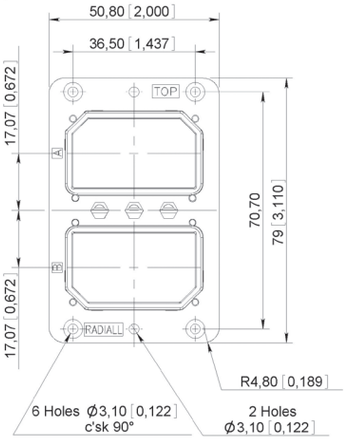

SHELL SIZE 3

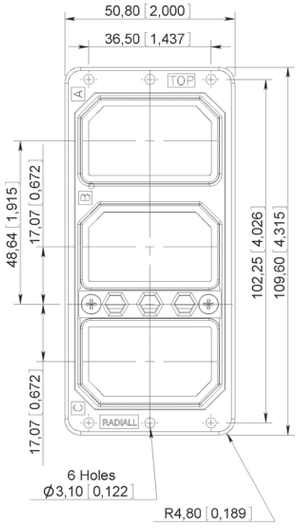

RECEPTACLE

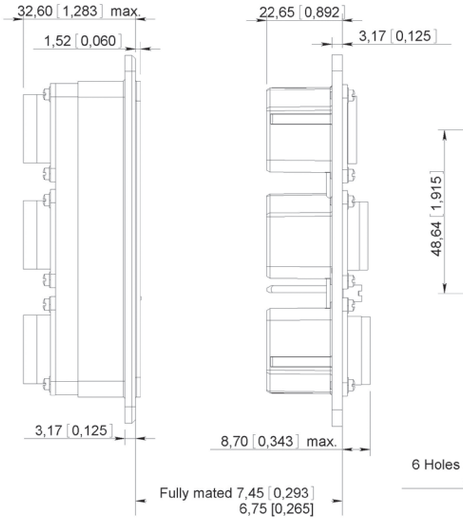

PLUG

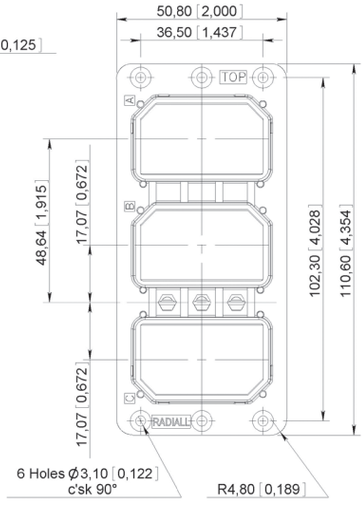

DSX-ARINC 404 Shell Type B

SHELL SIZE 4

PLUG

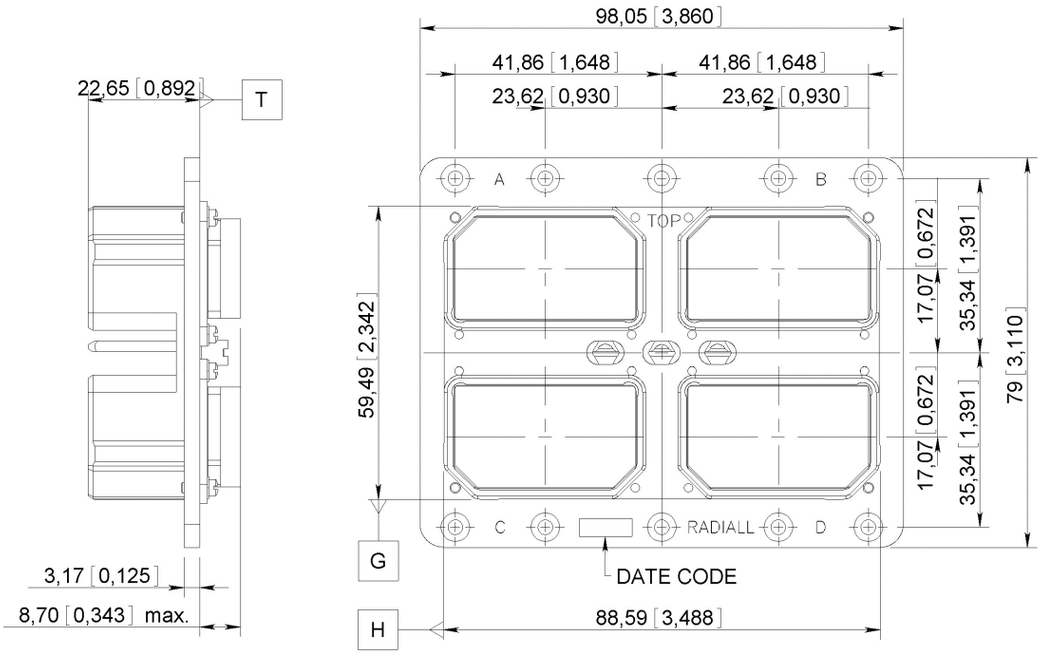

RECEPTACLE

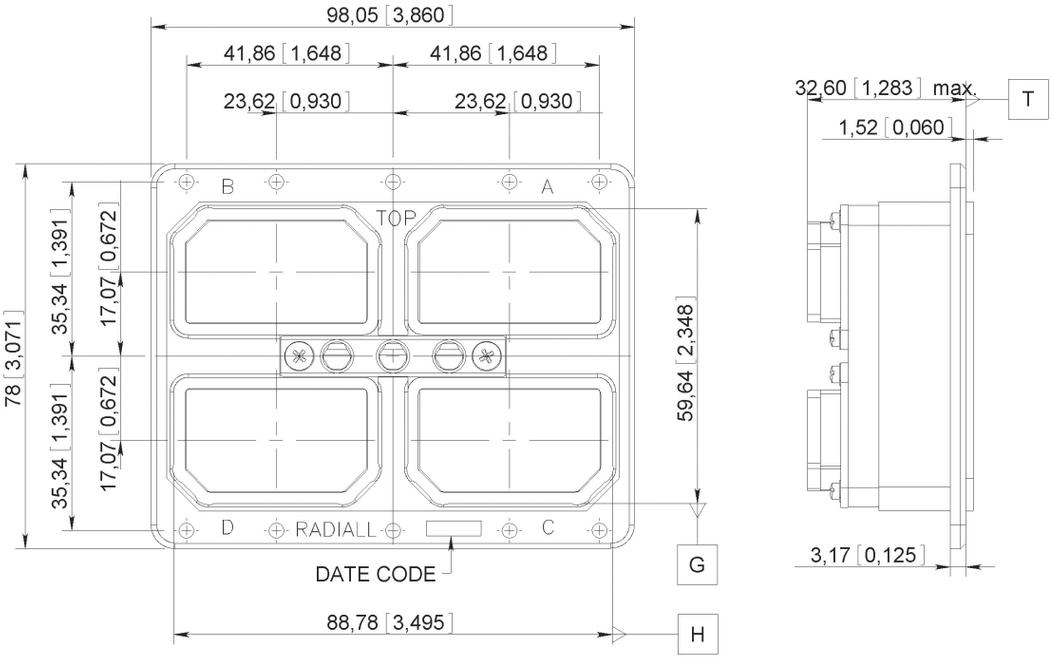

DSX-EMI/RFI

INTRODUCTION

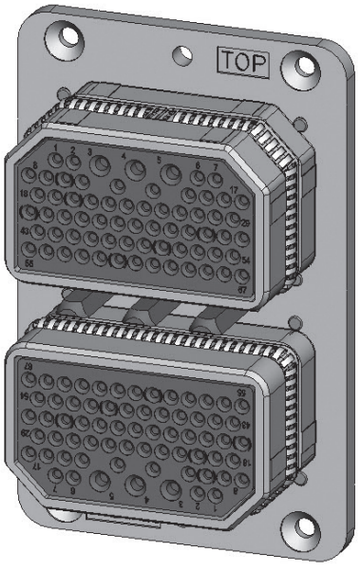

EMI/RFI acts directly on electronics systems whether by conduction mode through the input or output cables or by radiation (coupling).

Electronics equipment is particularly vulnerable to interference and can be disturbed or damaged by it. The serious consequences which may result, make it essential to protect such installations.

The first stage in protection is to install the equipment in a shielded cabinet which protects it from some interference; particularly those occurring by radiation. At the connector level that means to use metallic shells to have a good mass conduction between the equipment box and the rack.

To meet these requirements Radiall offers plug connectors for rack which are fitted with grounding spring fingers.

DSX SAE AS81659 and DSX-ARINC 404 shell type B in sizes 1,2,3, and 4, fitted with grounding fingers are available.

These connectors are interchangeable and intermatable with the standard ones.

PART NUMBERING

The part numbering system applies to plug shells only.

To establish the part number of a DSX EMI/RFI connector, simply add the letter “G” after the letter which defines the shell type in the DSX SAE AS81659 or Arinc 404 shell type B standard part number.

Examples of part numbers:

- DSXN2PGS404SS45S0001
- DSX2HG41S19S0001

TECHNICAL CHARACTERISTICS

The technical characteristics are the same as those of SAE AS81659 and Arinc 404 shell type B connectors except for the following.

- **Shell-to-Shell Conductivity:** 2.5 mΩ max. Measured according to method 3007 of MIL-STD-1344A.
- **Shielding Effectiveness:** >70 dB at 4 GHz. Measured according to method 3008 of MIL-STD-1344A.

MATERIALS

DESCRIPTION	MATERIAL	PLATING
Grounding Spring Fingers	Copper Alloy	Nickel

DSX-ARINC 404 Shell Type A

TECHNICAL CHARACTERISTICS

ELECTRICAL, MECHANICAL & ENVIRONMENTAL CHARACTERISITCS

Refer to SAE AS81659 standards page 7-5

MATERIALS

DESCRIPTION	MATERIAL	PLATING
Shell	Aluminium Alloy	Cadmium Yellow Chromate
Insert	Thermosetting Resin	-
Metallic Insert	Aluminium Alloy	Cadmium Clear Chromate
Rear Spacer	Silicone Rubber	-
Retention Clip	Copper Alloy	-
Contact	Copper Alloy	Gold over Nickel Underplate
Insert Retention Plate	Aluminium Alloy	Gold Anodized
Screws, Washers, Clinch-Nuts	Corrosion Resistant Steel	-

DSX-ARINC 404 Shell Type A

HOW TO ORDER-ARINC 404 SHELL TYPE A CONNECTORS

DSX

SERIES PREFIX

ONE SIZE
1: One gang shell

SHELL TYPE
E: Receptacle
F: Plug

CONTACT ARRANGEMENT
See table below and page 7-49.

TERMINATION STYLE [2 & 3]
X: Without contacts
S: Crimp [1]
Z: Fixed solder cup
K: Wire wrap one level [4]
V: Wire wrap two levels [4]
W: Wire wrap three levels [4]
Y: PC tail contact [4]

MODIFICATION CODE
See page 7-60.

CONTACT ARRANGEMENT CODE TABLE

	00	8	13	26	40	45	57	67	106	32C2	32C4	40C1	C2	C3	C8	D8
Insert for Pin Contacts	10	12	44	14	16	18	20	22	24	26	40	28	34	36	30	38
Insert for Socket Contacts	11	13	45	15	17	19	21	23	25	27	41	29	35	37	31	39

Notes
1. If you need to use reduced crimp barrel contacts, use code X and order contacts separately.
2. For C2, C3 and C8 contact arrangements which include coax contacts, use termination code X and order coax contacts separately.
3. For mixed layout 32C2, 32C4 and 40C1, the connector is delivered with signal and power contacts but without coax contacts. Order coaxial contacts separately.
4. For contact arrangement 67 and 32C4 with K, V, W or Y termination styles, size 16 contacts are crimp contacts shipped loose with the connector.

DSX-ARINC 404 Shell Type A

MODIFICATION CODE

Dimensions mm (inch)

CODE	RECEPTACLE SHELL		PLUG SHELL	
00	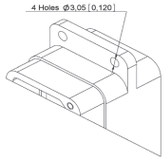	4 Holes Ø3.05 (0.120)	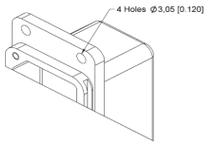	4 Holes Ø3.05 (0.120)
01	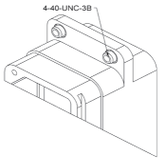	Four 4.40 UNC 3B Clinch Nuts	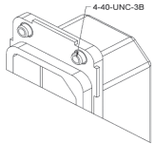	Four 4.40 UNC 3B Clinch Nuts
03	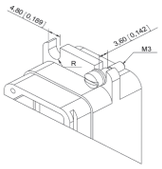	4 Mounting Slots 4.80 (0.189) Wide + Four M3 Shouldered Screws + 4 Washers	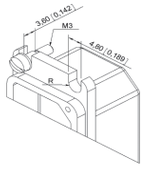	4 Mounting Slots 4.80 (0.189) Wide + Four M3 Shouldered Screws + 4 Washers
04	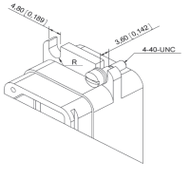	4 Mounting Slots 4.80 (0.189) Wide + Four 4.40 UNC Shouldered Screws + 4 Washers	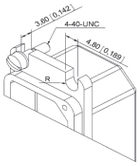	4 Mounting Slots 4.80 (0.189) Wide + Four .40 UNC Shouldered Screws + 4 Washers
05	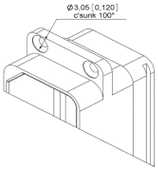	4 Holes 3.05 (0.120) dia c'sunk 100°	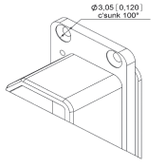	4 Holes 3.05 (0.120) dia c'sunk 100°
06	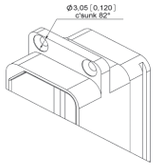	4 Holes 3.05 (0.120) dia c'sunk 82°	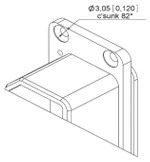	4 Holes 3.05 (0.120) dia c'sunk 82°
07	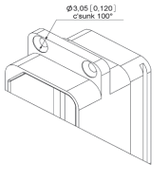	4 Holes 3.05 (0.120) dia c'sunk 100° + a Dust Cap	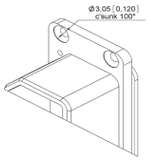	4 Holes 3.05 (0.120) dia c'sunk 100° + a Dust Cap

DSX-ARINC 404 Shell Type A

CONTACT ARRANGEMENTS

They are the same inserts as those used in Arinc 404 shell type B connectors (see page 7-49).

CONTACTS

The contacts used are those shown on page 7-51 to 7-54.

ACCESSORIES

Refer to page 7-54

DIMENSIONS

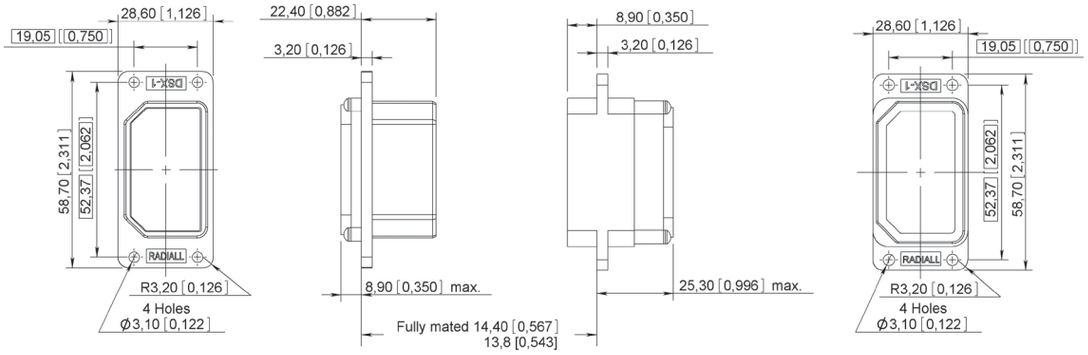

PANEL CUT-OUT

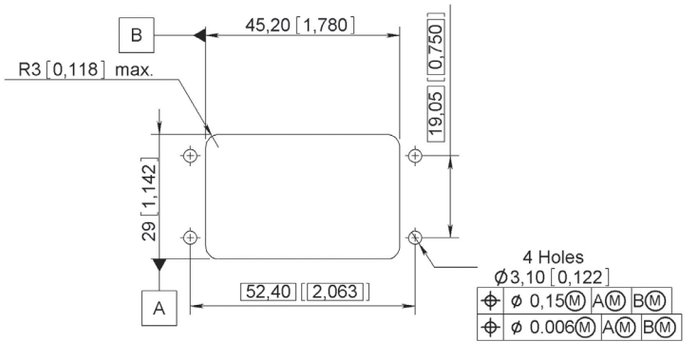

DSX-ARINC 404 Shell Type A

TOOLS

CRIMPING TOOLS

PART NUMBER	MIL SPEC P/N
282281	M22520/2-01
282291	M22520/1-01
282296	DANIELS M300BT
282293	M22520/5-01

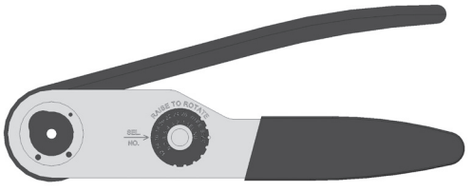

POSITIONERS

PART NUMBER	MIL SPEC P/N
282970	M22520/2-23
282971	M22520/2-08
282974	-
282550	Daniels K345
-	-
282972	M22520/1-02
282579	M22520/1-11
282557	-

INSERTION/EXTRACTION TOOLS

PART NUMBER	MIL SPEC P/N
282885	M81969/1-01
282886	M81969/1-02
282546	M81969/1-03
282547	M81969/28-02
282943	-
282946	M81969/28-01
282890	-
282892	-
282891	-
282929	-
282945	-
282500	-
282503	-
282504	-
282948	-
282949	-

DIE

PART NUMBER	MIL SPEC P/N
282246	M22520/5-05
282247	M22520/5-61
282248	OCETA M1001
282236	M22520/5-45

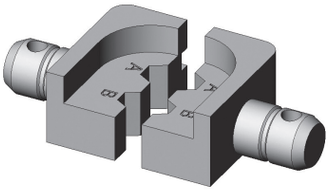

MMC SERIES

Section 8 Table of Contents

INTRODUCTION

Introduction....8-2
Applications....8-2
Features....8-2
Product Overview....8-3
Electrical Characteristics....8-4
Mechanical & Environmental Characteristics....8-4
Product Materials & Masses....8-5
How To Order Connectors....8-6
Part Numbering....8-6

CONTACTS

Contact Arrangements....8-7 to 8-8
Rack Guides Dimensions....8-9 to 8-10
Fixed Jackscrews Dimensions....8-11 to 8-12
Rotating Jackscrews Dimensions....8-13 to 8-14
Block 104 Contacts....8-15 to 8-17
Block 158 Contacts....8-18 to 8-19
Block 208 Contacts....8-20 to 8-21
Contacts....8-22
Front Release & Front Removable Contacts....8-22
Equipment Signal Contacts....8-23
Twisted Pair Crimp Contacts....8-24
Micro-Coaxial Contacts....8-25
Panel Cut-Out....8-26
Spare Parts for Guides....8-27
Spare Parts for Insulators, Backshells & Shrouds....8-28
Wiring Instructions....8-29 to 8-32
Tools....8-33

INTRODUCTION

The Radiall MMC series was designed in response to the majority of connection problems of cabling installation, internal and external on electrical and electronic equipment.

The series conforms to the French specification NF-C-93 426 HE 621-622.

They are made up of a rectangular insulation block which accepts equally male or female contacts fitted with different types of wires and coaxial cables. A large number of accessories are available for the MMC series, including: backshell with cable clamp, contact protection shrouds, and locking. This makes it possible for the connector to be manufactured exactly to the corresponding needs of the user.

APPLICATIONS

A simple, yet highly reliable construction makes the MMC offering enormously adaptable through use of the broad range of accessories. This has allowed the Radiall MMC series to be widely approved for the use in all civil and military fields such as computers, telecommunications, medical, aeronautical, naval and nuclear.

© Eurocopter-Jérome DEULIN

© Courtesy of US Army

FEATURES

All of the contacts are removable in order to facilitate replacement, repairs or modification to circuits.

A range of robust manual and automatic tooling with easy to follow instructions provides straight-forward connector/cable assembly. Fully conforms to the French specification NF-C-93 426 HE 621-622.

Introduction

PRODUCT OVERVIEW

Detailed view of the various parts of this series connector.

JACKSCREWS

RACK GUIDES

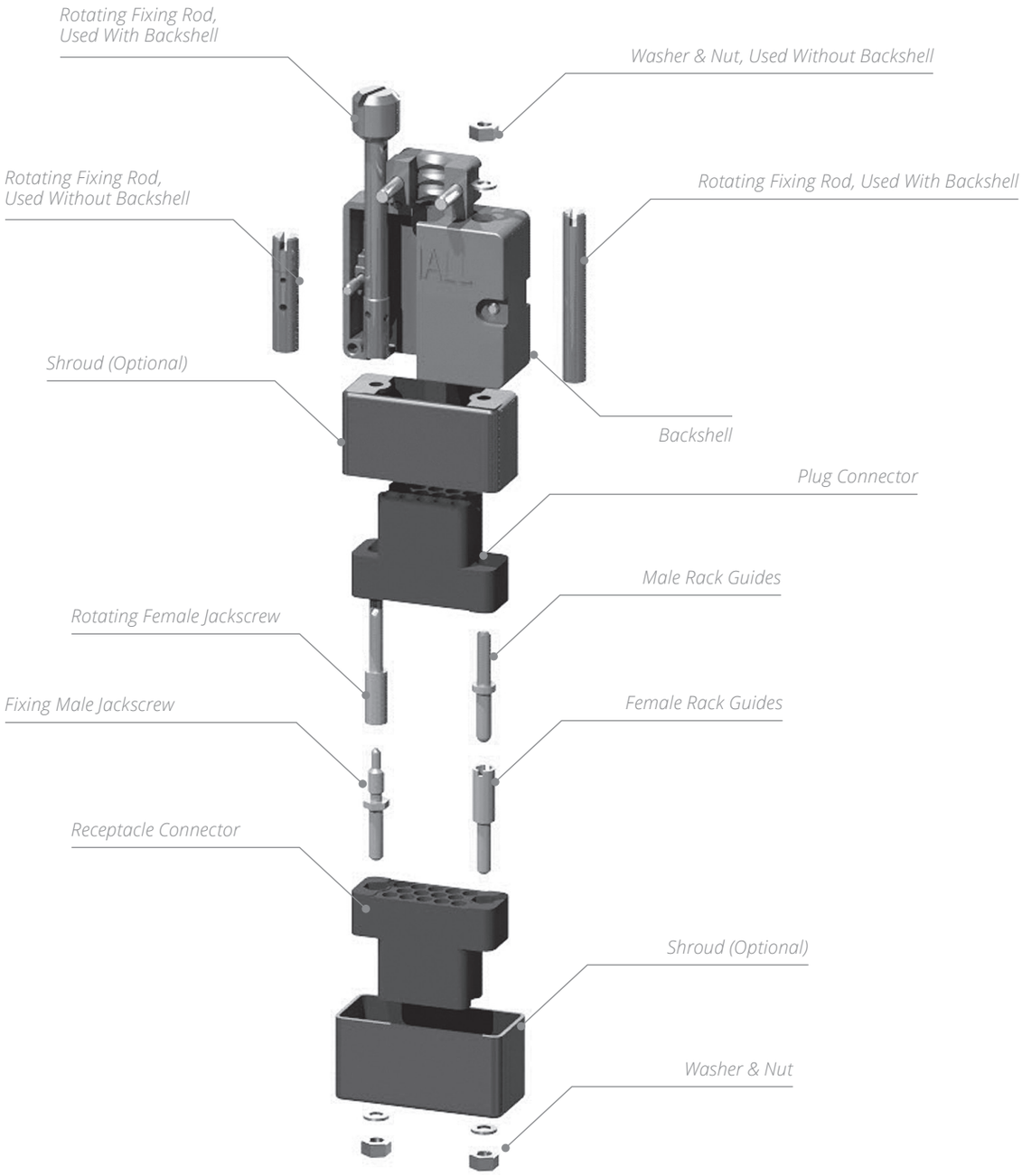

Introduction

ELECTRICAL CHARACTERISTICS

EQUIPMENT WIRE CONTACTS

WIRE SECTION	AWG	16	18	20	22	24	26	28
	mm²	1.34	0.93	0.60	0.38	0.22	0.14	0.093
Current Rating (Amp)		13	10	7.5	5	3	2	1
Maximum Ø on Insulation					3.10			
Contact Resistance					≤ 5 m Ω			

COAXIAL CONTACTS

- **Nominal Impedance:** 50 Ω
- **Operating Frequency:** 0 to 1,000 MHz
- **Dielectric Withstanding Voltage:** 600 Vrms at 50 Hz (At Sea Level)
- **Insulation Resistance:** ≥ 5,000 MΩ
- **Contact Resistance:** ≤ 12 mΩ

FREQUENCY	0–200MHZ	200–500 MHZ	500–1000 MHZ
Voltage Standing Wave Ratio (VSWR)	1.10	1.15	1.40
Insertion Loss by Pair (dB)	< 0.015	< 0.025	< 0.025

CONNECTORS

- **Insulation Resistance:** > 5,000 MΩ
- **Dielectric Withstanding Voltage:** 1,500 Vrms at 50 Hz (At Sea Level)

MECHANICAL & ENVIRONMENTAL CHARACTERISTICS

- **Retention of the Contact in Moulding:** > 50 N (11.24 lbs)
- **Mating Force per Contact Pair:** < 3.4 N (0.76 lbs)
- **Durability:** 500 matings
- **Vibration:** 20 g (0.71 oz) from 80 to 2,000 Hz
- **Shock:** 50 g (1.76 oz)
- **Temperature Range:** -55 °C at +125 °C (-131 °F to 257 °F)
- **Humidity:** 21 days
- **Salt Spray:** 48H

Introduction

PRODUCT MATERIALS

DESCRIPTION		MATERIAL	PLATING
Connector		Glass Filled Phenolic	-
Equipment Wire Contacts	Body Spring Retention Clip	Copper Alloy	Gold Over Nickel Gold Over Nickel Nickel
Coaxial Contacts	Body & Center Contacts Ferrule Insulator	Copper Alloy Copper Alloy PTFE	Gold Over Nickel Nickel
Rack Guide		Brass	Nickel-Plated
Jackscrews		Stainless Steel	-
Shroud		Steel	Yellow Chromate Cadmium Plated
Backshell		Zinc or Aluminium Alloy	Painted Black
Strain Relief Cable Clamp		Stainless Steel	-

PRODUCT MASSES

SIZE	MASSES g (oz)	TYPE
14	7 (0.246)	Plug Connector
20	8 (0.282)	
26	11 (0.388)	
34	19 (0.670)	
42	22 (0.776)	
690501	7 (0.246)	Receptacle Connector
690511	8 (0.282)	
690521	11 (0.388)	
690531	19 (0.670)	
690541	22 (0.776)	
690962	2 (0.070)	Rack Guide
690952		
690963	8 (0.282)	
690953		
690965	6 (0.211)	Short Jackscrew
690955		
690966	15 (0.529)	Long Jackscrew
690949	18 (0.634)	
690956	16 (0.564)	
690939	18 (0.634)	

REFERENCES	MASSES g (oz)	TYPE
690940	15 (0.529)	Shroud Male
690941	16 (0.564)	
690942	18 (0.634)	
690943	22 (0.776)	
690930	14 (0.493)	Shroud Female
690931	15 (0.529)	
690932	17 (0.599)	
690933	25 (0.881)	
690905	57 (2.010)	Backshell Top Entry
690908	65 (2.292)	
690911	77 (2.716)	
690914	101 (3.562)	
690917	125 (4.409)	
20521500	39 (1.375)	Backshell Side Entry
(14) 690848001	14 (0.493)	Strain Relief Top Entry
(20) 690848002	16 (0.564)	
(26) 690848003	18 (0.634)	
(50) 690848006	28 (0.987)	
(75) 690848007	40 (1.410)	

Introduction

HOW TO ORDER CONNECTORS

A pair of MMC connectors is made up of the following:

- A block "P" (plug)
- A block "R" (receptacle)

Of identical dimensions but distinguished by:

- The engraved letters "P" and "R" on the mating faces
- The contact identification and position of the cavities is a mirror image of the mating half.

Each block "P" and "R" must be fitted with male and female guides or jackscrews.

- On the block P female guide beside hole 1 or A
- On the block R male guide beside hole 1 or A (in order to prevent mismatching and misalignment).

PART NUMBERING

Connectors with guides (without other accessories)

690 600 690 600 O A O

SERIES
Basic code (see table below for selection)

CONNECTORS WITH ACCESSORIES

SERIES

BASIC CODE (see table below for selection)

MANDATORY

ACCESSORIES [2]
O: No accessories
A: Backshell top entry
B: Backshell side entry (only 75 way)
C: Top entry strain relief clamp (not available in 34 and 42 way)

SHROUDS
O: No shroud
A: Male shroud without polarizing [1]
Male shroud with polarizing [2]
F: Female shroud without polarizing [1]
Female shroud with polarizing [2]

IN	1	3	5	7
CODE	B	C	D	E

IN	1	3	5	7
CODE	G	H	J	K

NUMBER OF CONTACTS	RACK GUIDES		FIXED JACKSCREWS		ROTATING JACKSCREWS	
	PLUG	RECEPTACLE	PLUG	RECEPTACLE	PLUG	RECEPTACLE
14	400	500	701	700	600	602
20	410	510	711	710	610	612
26	420	520	721	720	620	622
34	430	530	731	730	630	632
42	440	540	741	740	640	642
50	450	550	751	750	650	652
75	460	560	761	760	660	662

Example: 701 goes with 602

Notes

1. Not available in 42 way
2. Not available in 14 way
When connector has a shroud with polarizing, polarization starts from the cavity A or 1 side of the connector (refer to page 8-28)

Contacts

CONTACT ARRANGEMENTS

VIEW WIRING SIDE mm (inch)

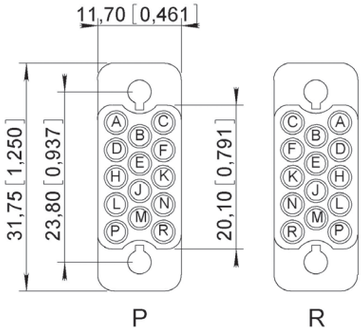

14 CONTACTS

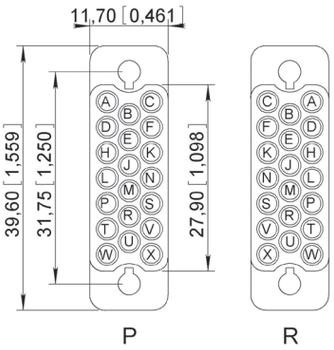

20 CONTACTS

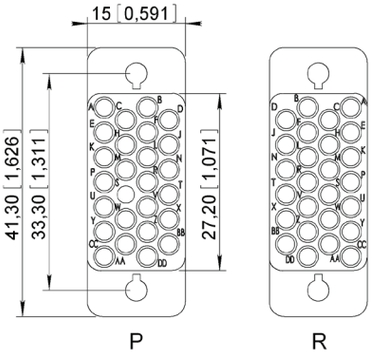

26 CONTACTS

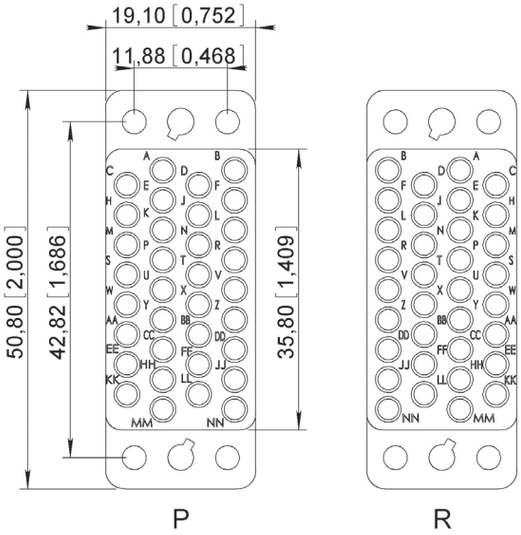

34 CONTACTS

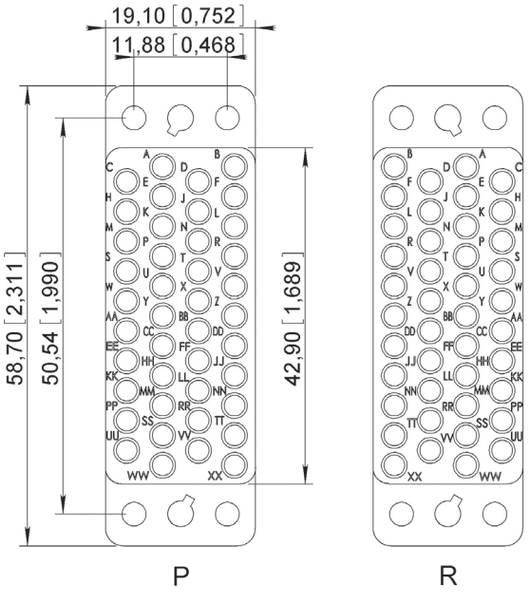

42 CONTACTS

Contacts

CONTACT ARRANGEMENTS

VIEW WIRING BLOCK mm (inch)

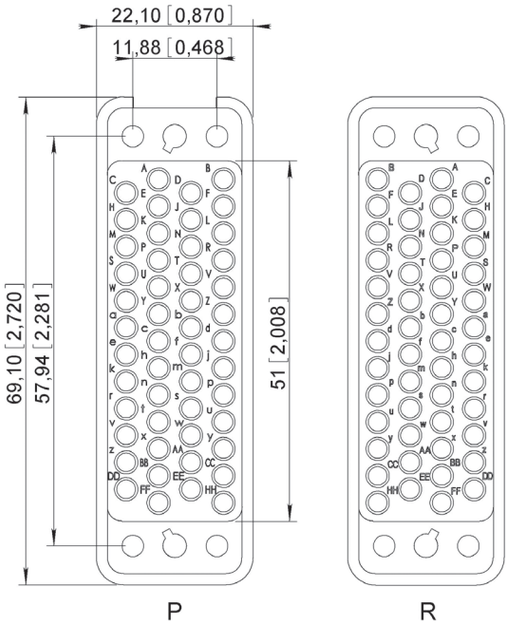

50 CONTACTS

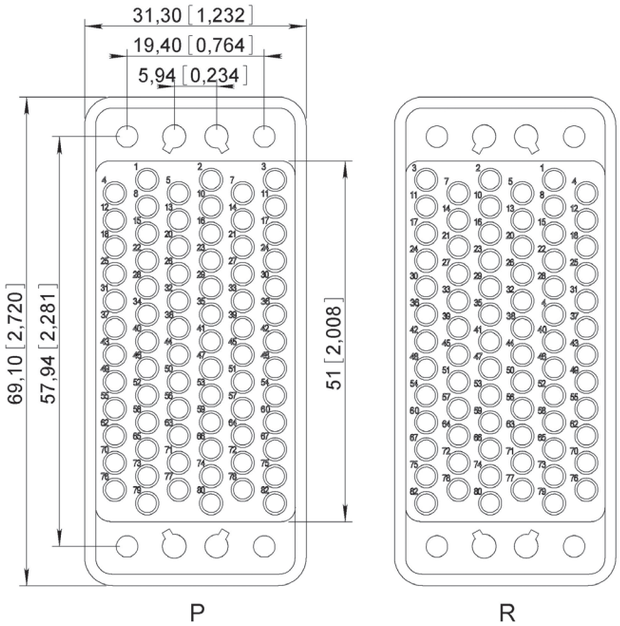

75 CONTACTS

HEIGHT DIMENSIONS mm (inch)

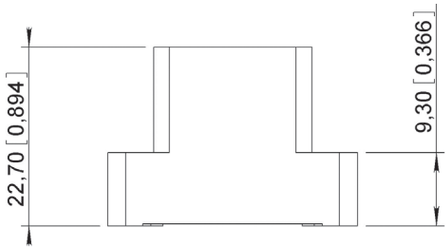

14, 20, 26, 34, 42 CONTACTS

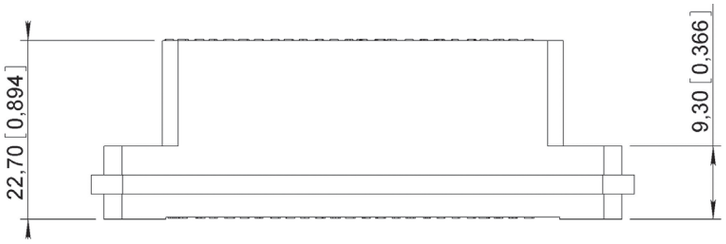

50, 75 CONTACTS

Contacts

RACK GUIDES DIMENSIONS

CONNECTOR BLOCK mm (inch)

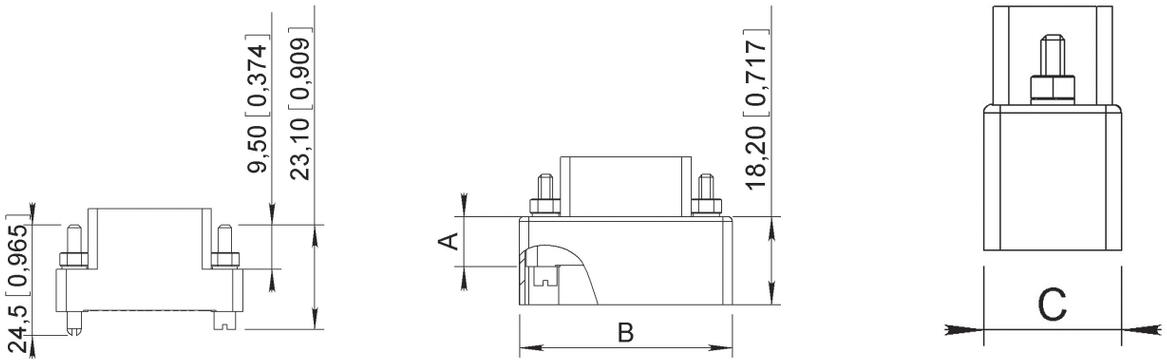

NUMBER OF CONTACTS	A	B		C	
		MALE	FEMALE	MALE	FEMALE
14	10.1 (.397)	34.8 (1.370)	37.2 (1.464)	14.2 (.559)	16.6 (.653)
20		42.2 (1.661)	45.1 (1.775)		
26		44.2 (1.740)	46.1 (1.826)	17.3 (.681)	19.4 (.764)
34	10.3 (.405)	54 (2.126)	56.4 (2.220)	22.2 (.874)	24.6 (.968)
42	Shroud Not Available				
50	10.3 (.405)	72 (2.834)	74.6 (2.937)	25.3 (.996)	27.8 (1.094)
75		72.4 (2.850)	74.7 (2.940)	34.4 (1.354)	37 (1.456)

STRAIN RELIEF CABLE CLAMP (TOP ENTRY) mm (inch)

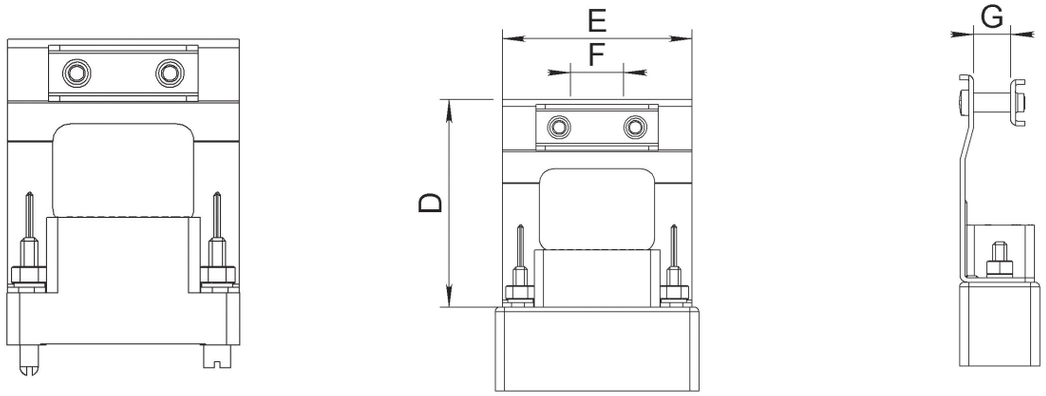

NUMBER OF CONTACTS	D	E	CABLE ENTRY DIMENSIONS	
			F	G MAX
14	44 (1.732)	31.5 (1.240)	5 (.0197)	8 (0.315)
20		39.5 (1.555)	12 (0.472)	
26		41.1 (1.618)		10 (0.394)
34	Cable Clamp Not Available			
42				
50	53 (2.086)	65.6 (2.582)	26 (1.023)	14 (0.551)
75				18 (0.708)

Contacts

RACK GUIDES DIMENSIONS

BACKSHELL TOP ENTRY - mm (inch)

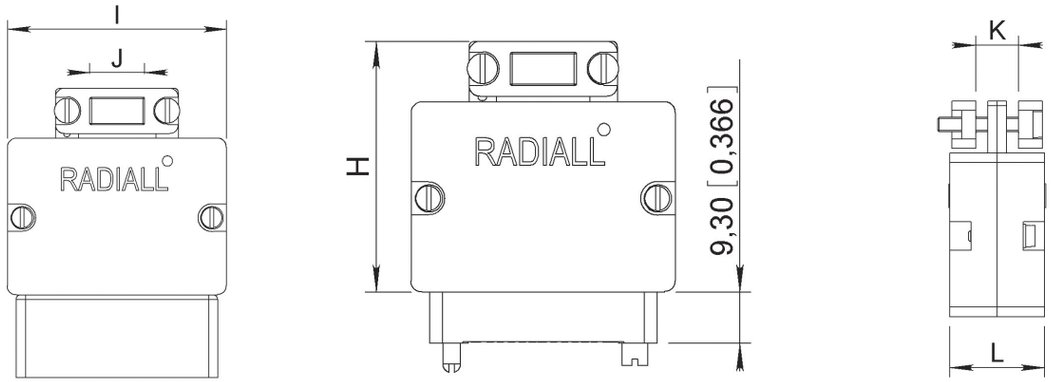

NUMBER OF CONTACTS	H	I	CABLE ENTRY DIMENSIONS		L
			J	K MAX	
14	46 (1.811)	39 (1.535)	7.6 (0.299)	13 (0.512)	17 (0.670)
20		47 (1.850)	15 (0.590)		
26		48.5 (1.909)	17 (0.670)	17 (0.670)	21 (0.827)
34	52.5 (2.067)	53.5 (2.106)	22 (0.866)	20 (0.787)	24 (0.945)
42	47 (1.850)	61 (2.401)	32 (1.260)	12 (0.472)	21.5 (0.846)
50	66.5 (2.618)	68.5 (2.697)	26 (1.023)	21 (0.827)	25 (0.984)
75	47 (1.850)	68 (2.677)	40 (1.575)		30.5 (1.200)

BACKSHELL SIDE ENTRY - AVAILABLE ONLY FOR 75 WAY mm (inch)

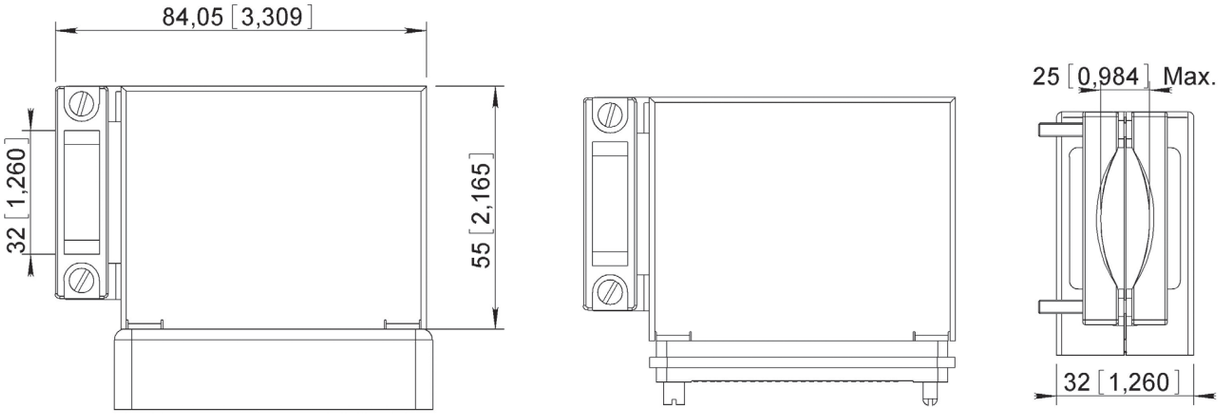

Contacts

FIXED JACKSCREWS DIMENSIONS

CONNECTOR BLOCK mm (inch)

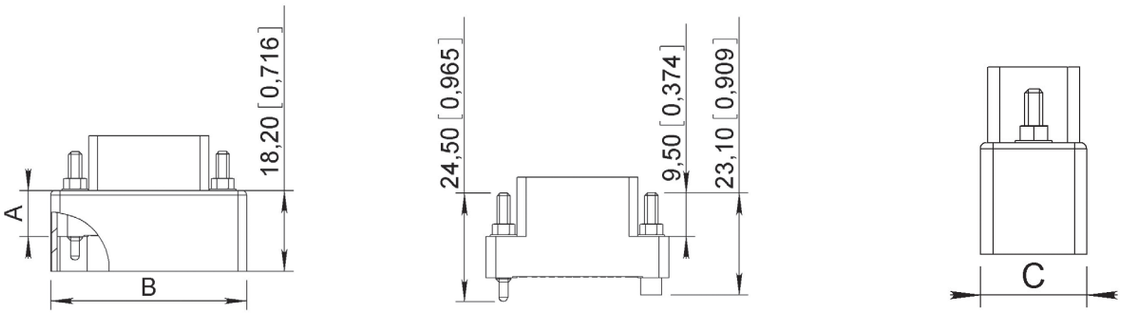

NUMBER OF CONTACTS	A	B		C	
		MALE	FEMALE	MALE	FEMALE
14	10.1 (0.397)	34.8 (1.370)	37.2 (1.464)	14.2 (0.559)	16.6 (0.653)
20		42.2 (1.661)	45.1 (1.775)		
26		44.2 (1.740)	46.4 (1.827)	17.3 (0.681)	19.4 (0.764)
34	10.3 (0.405)	54 (2.126)	56.4 (2.220)	22.2 (0.874)	24.6 (0.968)
42	Shroud Not Available				
50	10.3 (0.405)	72 (2.834)	74.6 (2.937)	25.3 (0.996)	27.8 (1.094)
75		72.4 (2.850)	74.7 (2.940)	34.4 (1.354)	37 (1.456)

STRAIN RELIEF CABLE CLAMP (TOP ENTRY) mm (inch)

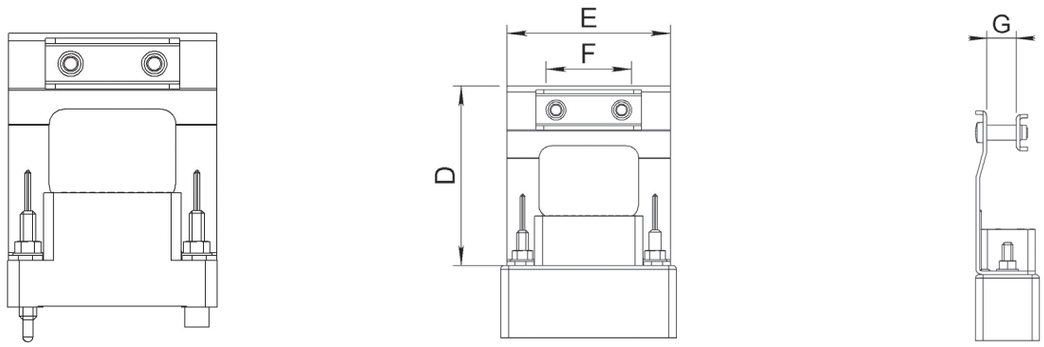

NUMBER OF CONTACTS	D	E	CABLE ENTRY DIMENSIONS	
			F	G MAX
14	44 (1.732)	31.5 (1.240)	5 (0.197)	8 (0.315)
20		39.5 (1.555)	12 (0.472)	
26		41.1 (1.618)		10 (0.394)
34	Cable Clamp Not Available			
42				
50	53 (2.086)	65.6 (2.582)	26 (1.023)	14 (0.551)
75				18 (0.708)

Contacts

FIXED JACKSCREWS DIMENSIONS

BACKSHELL TOP ENTRY - mm (inch)

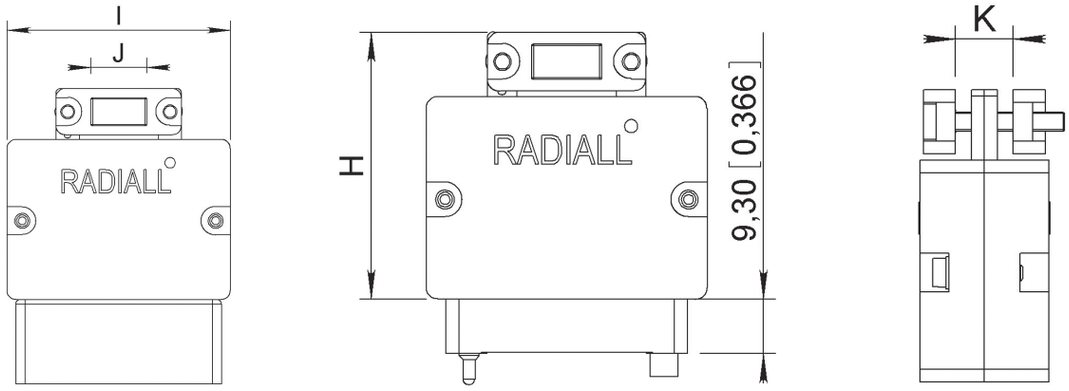

NUMBER OF CONTACTS	H	I	CABLE ENTRY DIMENSIONS		L
			J	K MAX	
14	46 (1.811)	39 (1.535)	7.6 (0.299)	13 (0.512)	17 (0.670)
20		47 (1.850)	15 (0.590)		
26		48.5 (1.909)	17 (0.670)	17 (0.670)	21 (0.827)
34	52.5 (2.067)	53.5 (2.106)	22 (0.866)	20 (0.787)	24 (0.945)
42	47 (1.850)	61 (2.401)	32 (1.260)	12 (0.472)	21.5 (0.846)
50	66.5 (2.618)	68.5 (2.697)	26 (1.023)	21 (0.827)	25 (0.984)
75	47 (1.850)	68 (2.677)	40 (1.575)		30.5 (1.200)

BACKSHELL SIDE ENTRY - AVAILABLE ONLY FOR 75 WAY mm (inch)

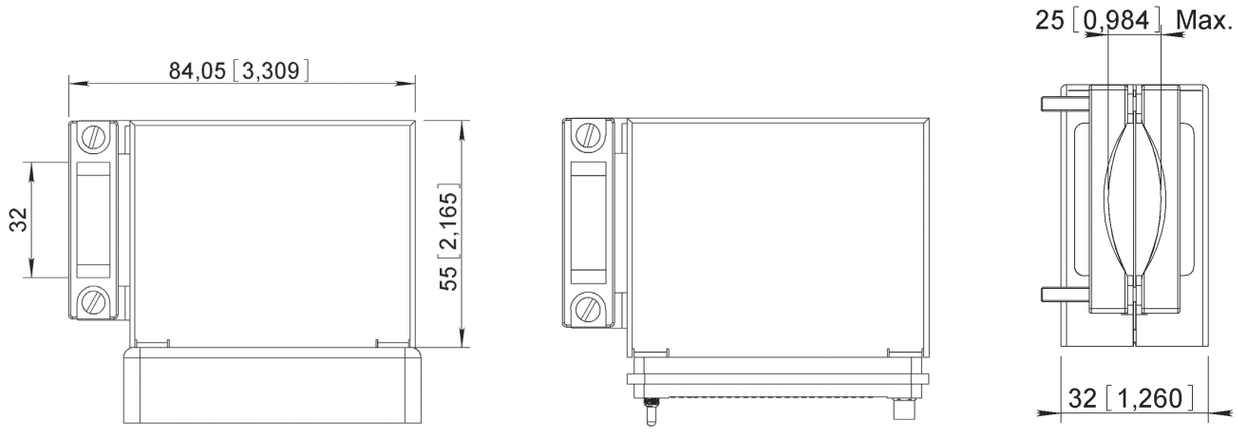

Contacts

ROTATING JACKSCREWS DIMENSIONS

CONNECTOR BLOCK mm (inch)

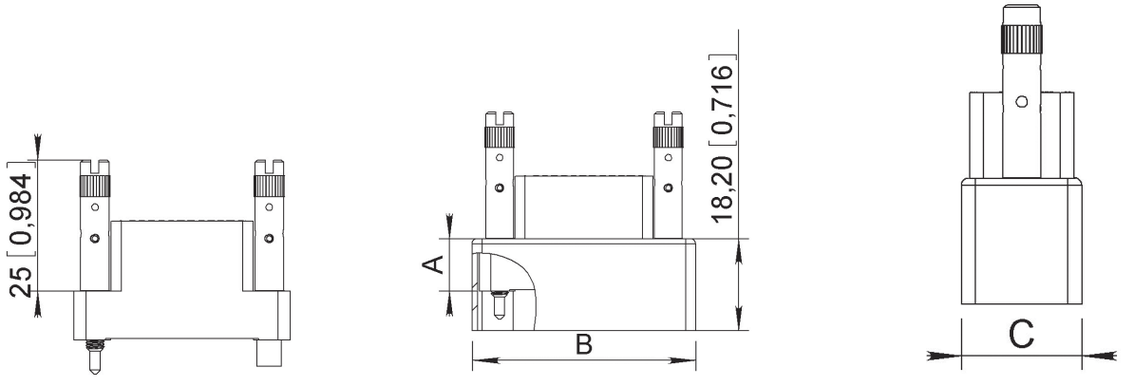

NUMBER OF CONTACTS	A	B		C	
		MALE	FEMALE	MALE	FEMALE
14	10.1 (0.397)	34.8 (1.370)	37.2 (1.464)	14.2 (0.559)	16.6 (0.653)
20		42.2 (1.661)	45.1 (1.775)		
26		44.2 (1.740)	46.4 (1.827)	17.3 (0.681)	19.4 (0.764)
34	10.3 (0.405)	54 (2.126)	56.4 (2.220)	22.2 (0.874)	24.6 (0.968)
42	Shroud Not Available				
50	10.3 (0.405)	72 (2.834)	74.6 (2.937)	25.3 (0.996)	27.8 (1.094)
75		72.4 (2.850)	74.7 (2.940)	34.4 (1.354)	37 (1.456)

STRAIN RELIEF CABLE CLAMP (TOP ENTRY) mm (inch)

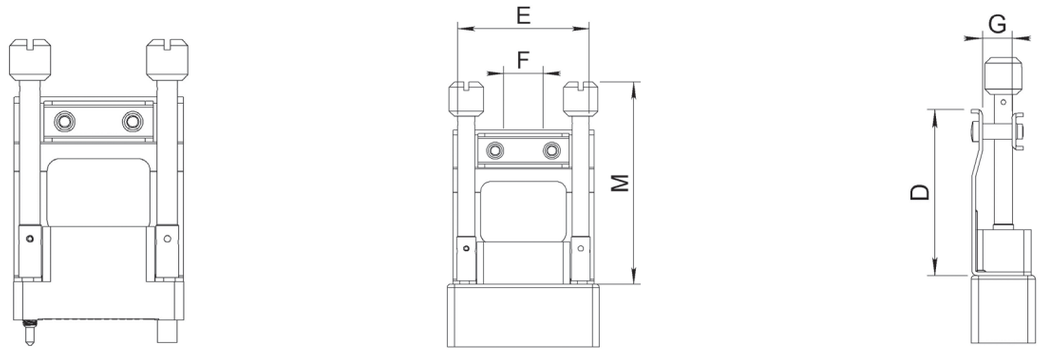

NUMBER OF CONTACTS	D	E	M	CABLE ENTRY DIMENSIONS	
				F	G MAX
14	44 (1.732)	31.5 (1.240)	60 (2.362)	5 (0.197)	8 (0.315)
20		39.5 (1.555)		12 (0.472)	
26		41.1 (1.618)			10 (0.394)
34	Cable Clamp Not Available				
42					
50	53 (2.086)	65.6 (2.582)	64 (2.519)	26 (1.023)	14 (0.551)
75					18 (0.708)

Contacts

ROTATING JACKSCREWS DIMENSIONS

BACKSHELL TOP ENTRY - mm (inch)

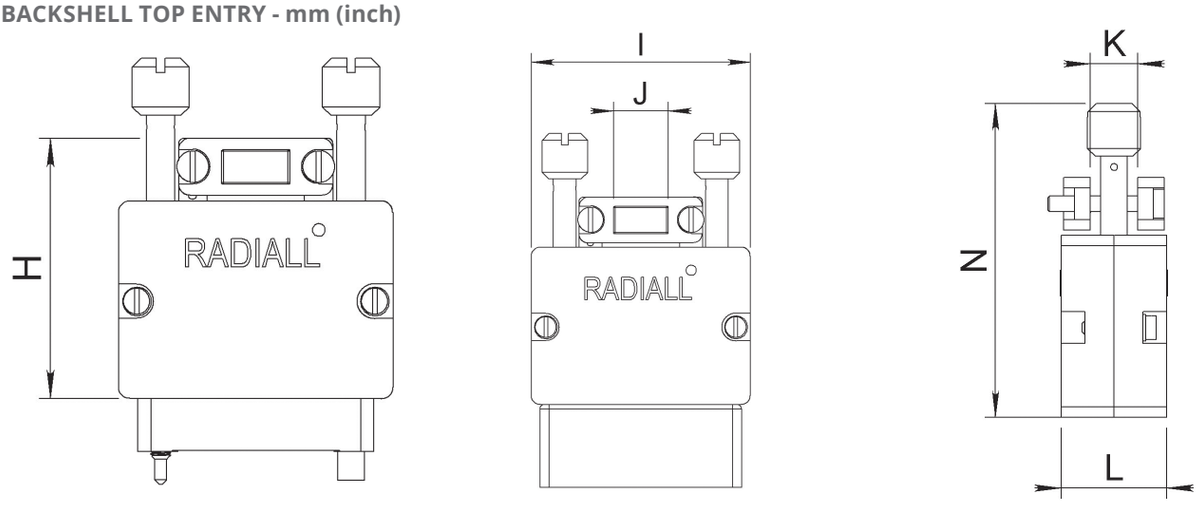

NUMBER OF CONTACTS	H	I	CABLE ENTRY DIMENSIONS		L	N
			J	K MAX		
14	46 (1.811)	39 (1.535)	7.6 (.299)	13 (.512)	17 (.670)	60 (2.362)
20		47 (1.850)	15 (.590)			
26		48.5 (1.909)	17 (.670)	17 (.670)	21 (.827)	
34	52.5 (2.067)	53.5 (2.106)	22 (.866)	20 (.787)	24 (.945)	64 (2.519)
42	47 (1.850)	61 (2.401)	32 (1.260)	12 (.472)	21.5 (.846)	
50	66.5 (2.618)	68.5 (2.697)	26 (1.023)	21 (.827)	25 (.984)	78 (3.071)
75	47 (1.850)	68 (2.677)	40 (1.575)		30.5 (1.200)	

BACKSHELL SIDE ENTRY - AVAILABLE ONLY FOR 75 WAY mm (inch)

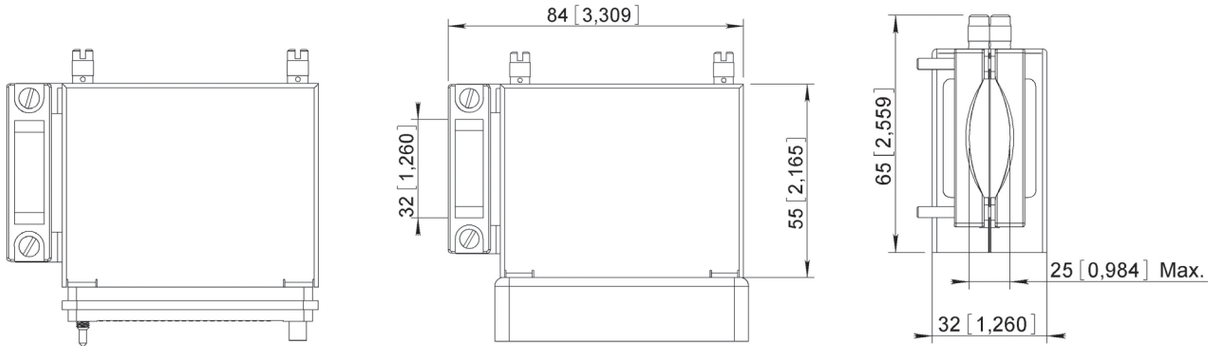

Contacts

BLOCK 104 CONTACTS

CENTRAL GUIDE	R TYPE-RACK GUIDES				PART NUMBER
	A	B	C	D	
Mates with All the Blocks P	No Guides				690571
	Female	Male	Male	Female	690570
	Female	-	-	Female	690572
	Female	Female	Female	Female	690573

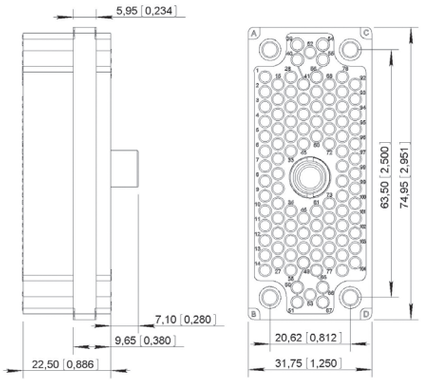

VIEW WIRING SIDE MM (INCH)

CENTRAL GUIDE	P TYPE-RACK GUIDES				PART NUMBER
	A	B	C	D	
Central Rack Guide	No Guides				690481
	Male	Female	Female	Male	690480
	Male	-	-	Male	690482
	Male	Male	Male	Male	690483
Sunken Hex. Nut 4 A/F	No Guides				690471
	Male	Female	Female	Male	690470
	Male	-	-	Male	690472
	Male	Male	Male	Male	690473
Central Jackscrew	No Guides				690476
	Male	Female	Female	Male	690475
	Male	-	-	Male	690477
	Male	Male	Male	Male	690478

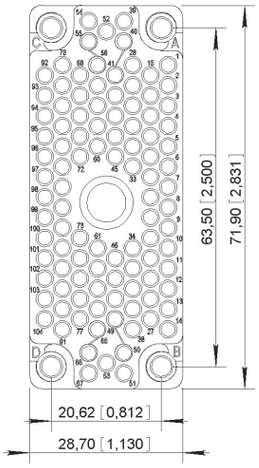

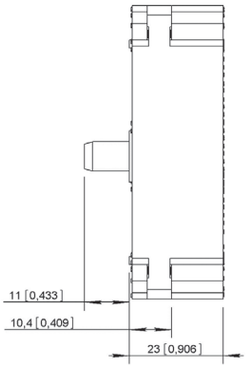

RACK GUIDE

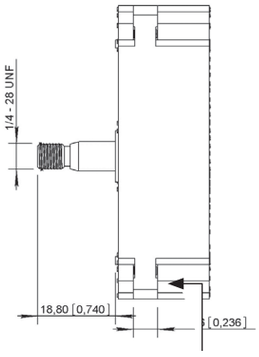

SUNKEN HEX. NUT

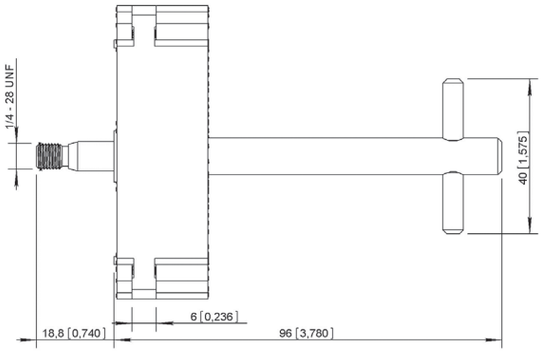

CENTRAL JACKSCREW

BACKSHELL TOP ENTRY MM (INCH)

Contacts

Detailed view of the connector with shroud mounted on a panel.

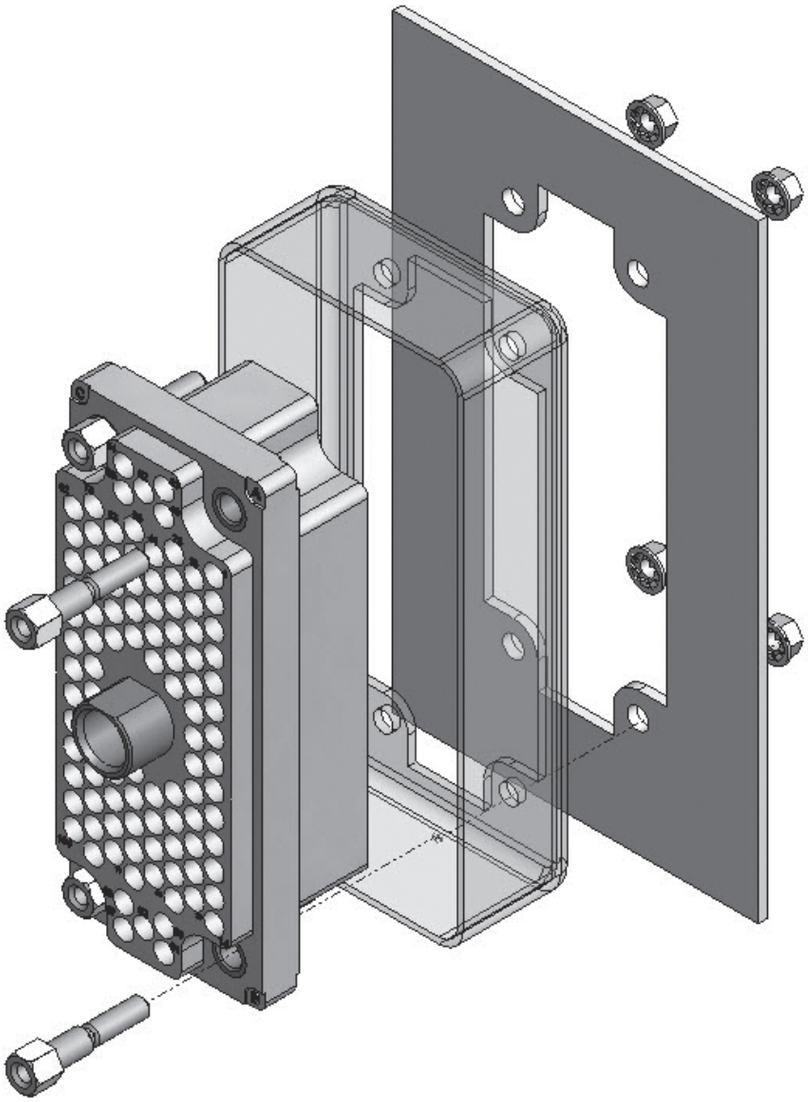

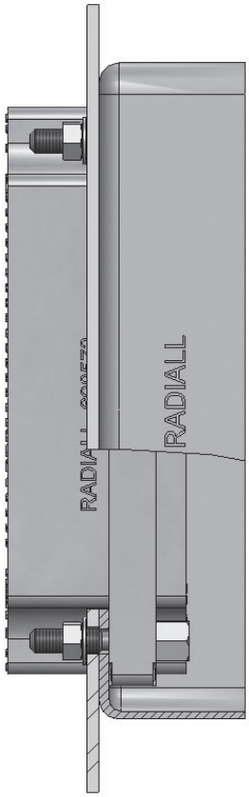

VIEW ONCE ALL ASSEMBLED

Contacts

GUIDES TO MOUNT IN POSITIONS A, B, C, D

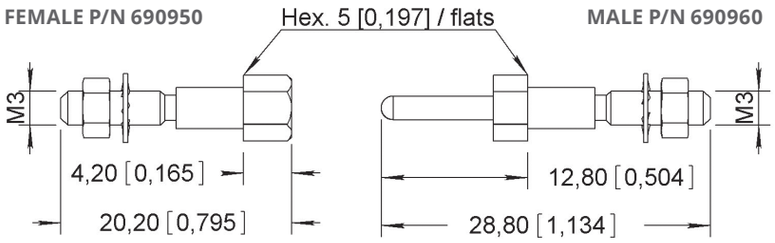

SHROUDS

FEMALE SHROUD-USE ONLY THIS REFERENCE TO ORDER WITHOUT POLARIZING CODE

POLARIZATION CODE	POSITION
110	1
120	3
130	5
140	7
210	1 + 3
220	3 + 5
230	5 + 7
240	1 + 5
250	3 + 7
260	1 + 7

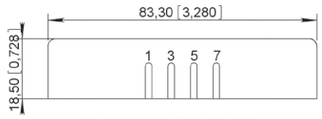

SHROUD FEMALE

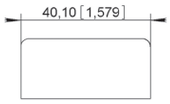

REF: 690 992

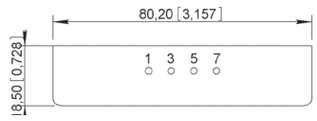

SHROUD MALE

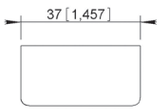

REF: 690 991

MALE SHROUD-USE ONLY THIS REFERENCE TO ORDER WITHOUT POLARIZING CODE

To order with polarizing: add the polarization code at the end of the shroud part number, see example: 690991110.

BACKSHELL–CAST ALUMINIUM PAINTED BLACK ASSEMBLY KIT

ENTRY	CABLE CLAMP MAX cm (inch)	L	H	PART NUMBER
1 entry 45°	7.8 (3.1)	70 (27.6)	71 (28)	690971
2 entries 45°	15.6 (6.1)			690972
1 entry 0°	5.3 (2.1)	55 (21.7)	66 (26)	690973
2 entries 0°	10.6 (4.2)			690974
1 entry 90°	5.3 (2.1)	65 (25.6)	57 (22.4)	690973
2 entries 90°	10.6 (4.2)			690974

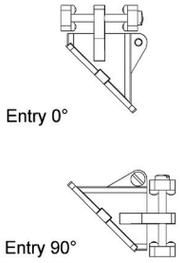

SPARE PARTS (1 OR 2 ENTRY ROTATION)

DESCRIPTION	PART NUMBER
Body (In 2 Parts)	690977
Entry 0–90°	690980
Entry 45°	690979
Cap	690978

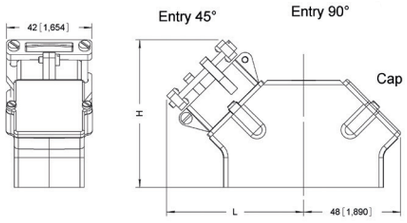

Contacts

BLOCK 158 CONTACTS

R TYPE		GUIDES SUPPLIED UNMOUNTED	
CENTRAL GUIDE	WITHOUT GUIDES	4 FEMALE	2 MALE/ 2 FEMALE
Mates with All Blocks P	690686	690670	690680

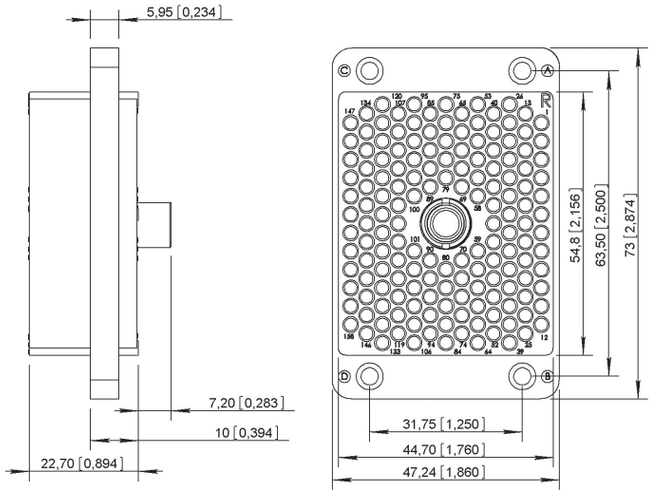

VIEW WIRING SIDE MM (INCH)

P TYPE		GUIDES SUPPLIED UNMOUNTED	
CENTRAL GUIDE	WITHOUT GUIDES	4 FEMALE	2 MALE/ 2 FEMALE
Central Rack Guide	690681	690678	690683
Sunken Hex. 4 A/F	690671	690679	690684
Central Jackscrew	690676	690677	690682

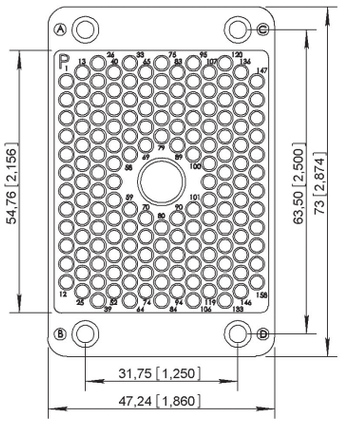

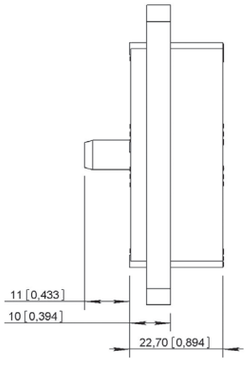

RACK GUIDE

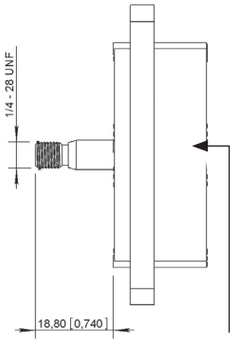

SUNKEN HEX. NUT

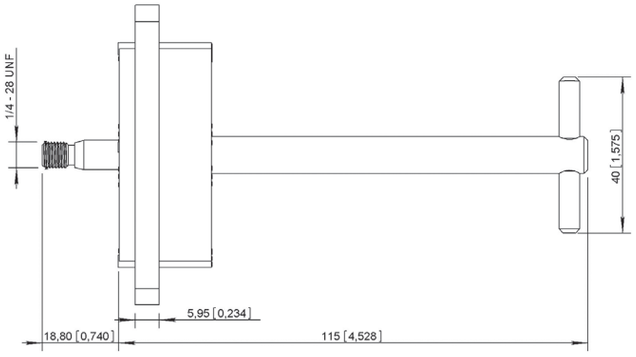

CENTRAL JACKSCREW

Contacts

GUIDES TO MOUNT IN POSITIONS A, B, C, D - mm (inch)

FEMALE P/N 690950 **MALE P/N 690960**

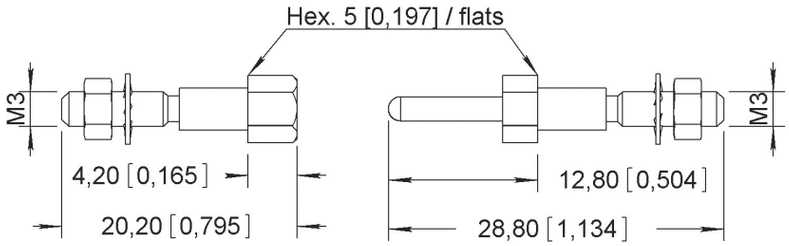

BACKSHELL P/N 690985 - mm (inch)

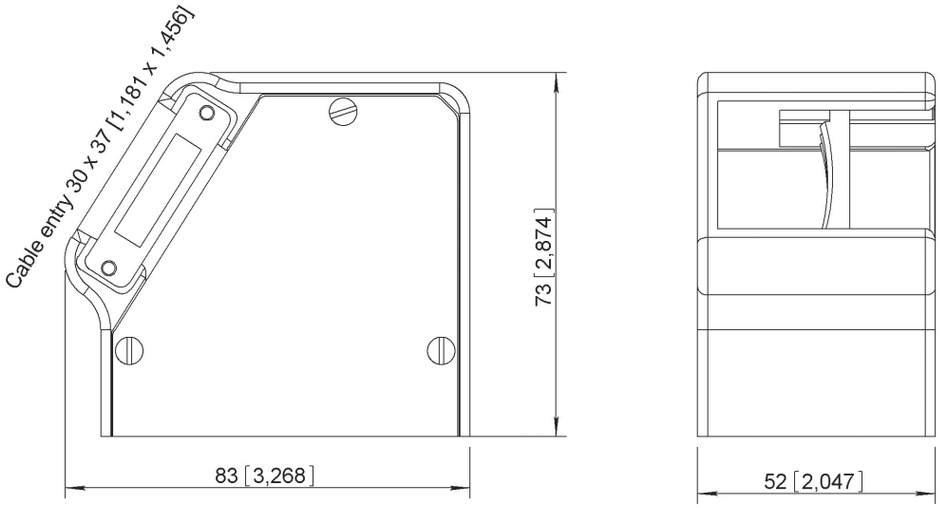

Contacts

BLOCK 208 CONTACTS

POLARIZING POSITIONS	R TYPE	
	GUIDES SUPPLIED UNMOUNTED	
	4 FEMALE	2 MALE/2 FEMALE
N	690768001	690778004
R	690768002	690778007
Z	690768003	690778002
Y	690768004	690778003
X	690768005	690778001
W	690768006	690778005

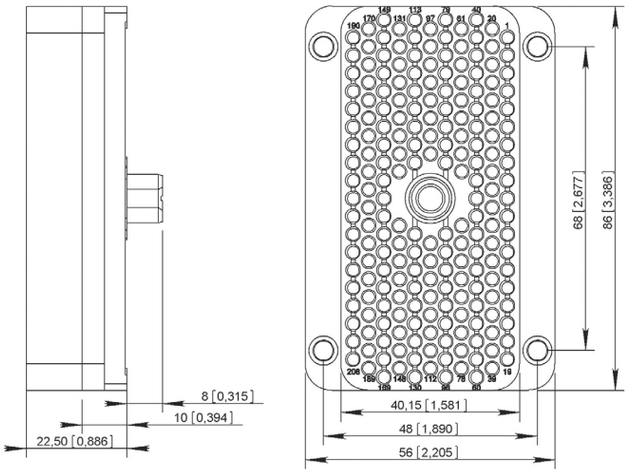

VIEW WIRING SIDE mm (inch)

POLARIZING POSITIONS	P TYPE	
	GUIDES SUPPLIED UNMOUNTED	
	4 MALE	2 MALE/2 FEMALE
N	690769001	690767001
R	690769002	690767002
Z	690769003	690767003
Y	690769004	690767004
X	690769005	690767005
W	690769006	690767006

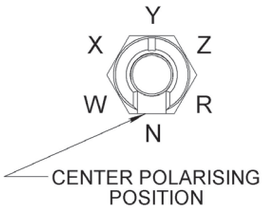

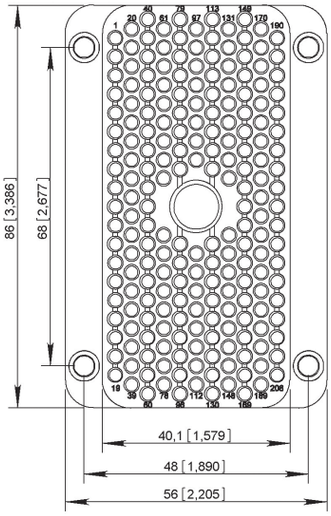

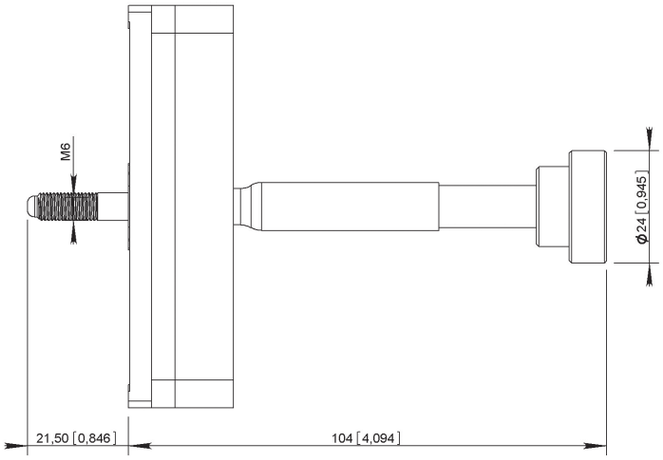

Contacts

GUIDES TO MOUNT IN POSITIONS A, B, C, D - mm (inch)

FEMALE P/N 690958 **MALE P/N 690968**

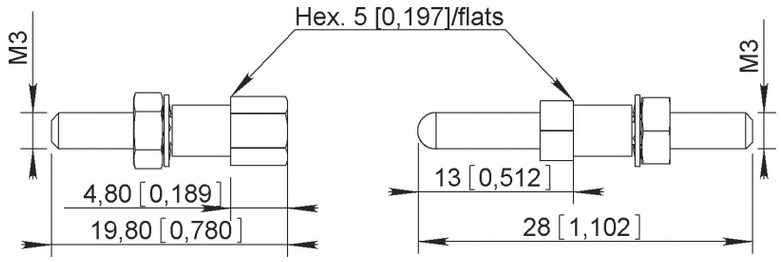

BACKSHELL P/N 690982 - mm (inch)

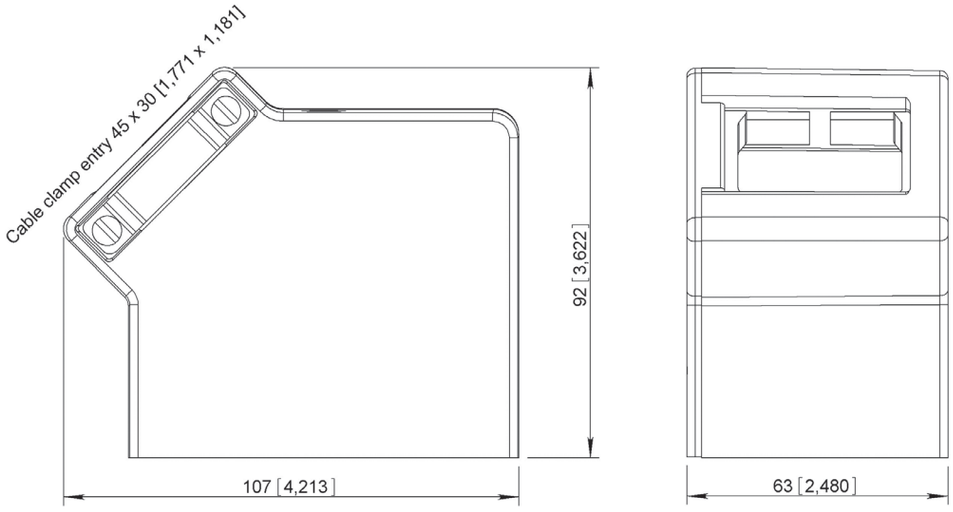

CONTACTS

Pins and/or sockets for equipment wire, twisted pairs and coaxial cable can be housed in either plug or receptacle giving a multitude of connection possibilities.

Many contact arrangements available: 14 -20-26-34-42-50-75-104-158 and 208 ways.

The signal contacts size 16 (pin Ø 1.58mm) are for crimping to AWG 16 to 28.

Contacts for wire wrapping are available with tails 0.6 x 0.6 mm (0.024x0.024 inch) or 1.2 x 1.2mm (0.047 x 0.047 inch) square. The coaxial contacts are for crimping to 2 mm and 2.6 mm coaxial cables and AWG 24 to 30 twisted pairs.

For all other contact terminations: consult us

No tool is necessary for the insertion, the extraction is from the rear using an extraction tool introduced by the mating face of the connector.

FRONT RELEASE & FRONT REMOVABLE CONTACTS

In order to facilitate the junction of MMC series connectors with a flexible or steady printed circuits, Radiall created a range of solder tail and wire wrap front release contacts.

This eases the replacement of a damaged contact without rewiring the set.

These size 16 contacts fit with all standard MMC connectors cavities from 14 to 208 which allow to mix them on a same connector with micro-coaxial contacts and crimping contacts.

TYPE	CONTACTS ARRANGEMENTS		CONTACT [1]		REPLACEMENT CONTACT [2]	
			PIN	SOCKET	PIN	SOCKET
Mini-Wrapping ⌀ 0.6 (.024) Flats 2 Wraps	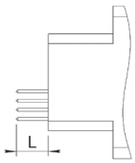	L=10.6 (.417)	690220	690320	690220001	690320001
Mini-Wrapping ⌀ 0.6 (.024) Flats 3 Wraps		L=16 (.630)	690221	690321	690221001	690321001
PC Tail Ø 0.65mm (.026)		L=6.2 (.244)	690222	690322	690222001	690322001

INSTALLATION AND EXTRACTION OF FR/FR CONTACTS.

CONTACT INSTALLATION

1. Insert the contact fitted with the retention clip through the mating face and push insertion tool 282501.

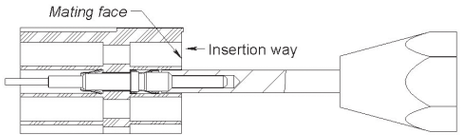

2. Introduce the sleeve by the rear face with tool 282502 and push it until it flushes with the insulator.

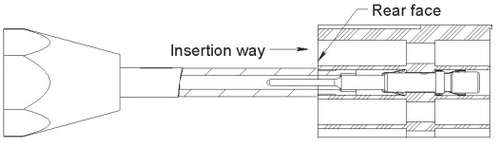

CONTACT REPLACEMENT

Extraction: insert the extraction tool 282917 by the mating face into the cavity of the contact to be replaced. Push it until it butts against the contact shoulder. Maintain the pressure on piston and pull on body tool to extract the contact. To free the contact release pressure on piston.

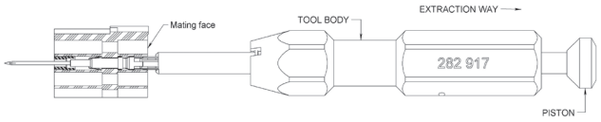

Installation of a new contact without retention clip: insert the contact through the mating face, push it with tool 282501 until contact snaps in place.

Notes

1. Contact with retention clip and anti-rotation sleeve, must be used for the original or initial equipment of the connectors.
2. Contact without retention clip and anti-rotation sleeve for the replacement of damaged contacts.

Contacts

EQUIPMENT SIGNAL CONTACTS

FRONT RELEASE/REAR RELEASE CRIMP CONTACTS

CABLES			CONTACTS		POSITIONER	CRIMPING TOOL	POSITION ON CRIMP TOOL	EXTRACTION TOOL
AWG SIZE	SECTION IN mm² (sq.in)	Ø MAX. ON SLEEVE mm (inch)	PIN	SOCKET				
16 18 20	1.34 (0.053) 0.93 (0.037) 0.60 (0.024)	3.10 (0.122)	690200	690300	282975	282291 M22520/1.01	6 5 4	282920
16 18 20	1.34 (0.053) 0.93 (0.037) 0.60 (0.024)	3.10 (0.122)	690201	690301			6 5 4	
20 22 24	0.60(0.024) 0.38 (0.015) 0.22 (0.009)	2.20 (0.086)	690215	690315	282976		4 3 2	282920
24 26 28	0.22 (0.009) 0.14 (0.006) 0.093 (0.004)	1.60 (0.063)	690235	690335			4 2 2	

WIRE WRAP CONTACTS

TYPE	CONTACTS ARRANGEMENTS		CONTACTS		TOOLS	
			PIN	SOCKET	INSERTION	EXTRACTION
Mini-Wrapping Ø 0.6 (0.024) Flats 2 Wraps	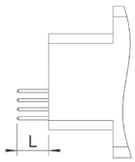	L=10.6 (0.417)	690241	690341	282921	282920
Wrapping Standard Ø 1.2 (0.047) Flats 3 Wraps		L=19.5 (0.767)	690240	690340		

Contacts

TWISTED PAIR CRIMP CONTACTS

CABLES				TOOLS [3]				CONTACTS & WIRING INSTRUCTIONS [4]	
AWG SIZE		SECTION IN mm² (sq.in)	Ø MAX. ON INSULATOR	CENTER CONTACT		OUTER CONTACT		SOCKET [1]	PIN [2]
				POSITION ON CRIMPING TOOL [5]	POSITIONER	CIMPING TOOL	POSITIONER		
24	Stranded Wire Cable	0.22 (0.009)	0.96 (0.038)	2	282981/M22520/2.04	282292 /M22520/4.01	282973/M22520/4.02	690070 B	690170 B
26	Stranded Wire Cable	0.14 (0.006)	0.84 (0.033)	2				690060 A	690160 A
28		0.093 (0.004)	0.73 (0.029)	1					
30		0.055 (0.002)	0.66 (0.026)	1					
26	Single Wire Cable	0.12 (0.005)	0.85 (0.033)	3					
28		0.08 (0.003)	0.67 (0.026)	2					
30		0.05 (0.002)	0.58 (0.023)	1					
26	Stranded Wire Cable	0.14 (0.006)	0.84 (0.033)	2				690061 A	690161 A
28		0.093 (0.004)	0.73 (0.029)	1					
26	Single Wire Cable	0.12 (0.005)	0.85 (0.033)	3					
28		0.08 (0.003)	0.67 (0.026)	2					
30	Stranded Wire Cable	0.055 (0.002)	0.66 (0.026)	1				690062 A	690162 A
30	Single Wire Cable	0.05 (0.002)	0.58 (0.023)	1					

Notes

1. Body female contact/center male contact
2. Body male contact/center female contact
3. Extraction tool for all twisted pair contacts P/N 282920
4. Wiring instructions on pages 8-29 to 8-32
5. Crimping tool for all 282281/M22520/2.01

Contacts

COAXIAL CRIMP CONTACTS

CABLES			TOOLS [3]				CONTACTS & WIRING INSTRUCTIONS [4]	
CABLE REFERENCE	IMPEDANCE Ω	OUTER DIAMETER	CENTER CONTACT		OUTER CONTACT		SOCKET [1]	PIN [2]
			CRIMP TOOL	POSITIONER	CRIMP TOOL	POSITIONER		
RG178/U RG196/U KX21	50	2 (0.079)	282281 M22520/2.01	282981 M22520/2.04	282292 M22520/4.01	282973 M22520/4.02	690020 C	690120 C
KX3A RG316/U KX22	50	2.54 (0.100) ± 0.13 (0.005)					690040 D	690140 D
RG179/U	75							

Notes

1. Body female contact/center male contact
2. Body male contact/center female contact
3. Extraction tool for all twisted pair contacts P/N 282920
4. Wiring instructions on pages 8-29 to 8-32

Contacts

PANEL CUT-OUT

NUMBER OF CONTACTS	A	B	C	MAX. PANEL THICKNESS
14	12.4 (0.488)	23.8 (0.937)	20.8 (0.819)	6 (0.236)
20	12.4 (0.488)	31.7 (1.248)	28.7 (1.130)	
26	15.7 (0.618)	33.3 (1.311)	29.2 (1.150)	

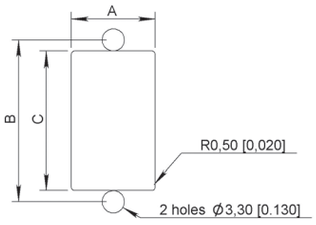

NUMBER OF CONTACTS	A	B	C	D	E	F	MAX. PANEL THICKNESS
34	19.8 (0.779)	11.9 (.468)	6.3 (0.248)	49.3 (1.940)	42.8 (1.685)	36.6 (1.441)	6 (0.236)
42				56.9 (2.240)	50.5 (1.988)	43.7 (1.720)	
50				64.3 (2.531)	57.9 (2.279)	51.6 (2.031)	
75	29 (1.141)	19.4 (0.764)	14.2 (0.559)				
104	29.3 (1.153)	20.6 (0.811)	12.7 (0.500)	72.5 (2.854)	63.5 (2.500)	55.6 (2.189)	5.5 (0.216)

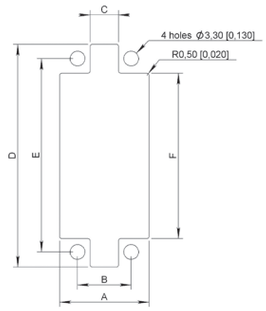

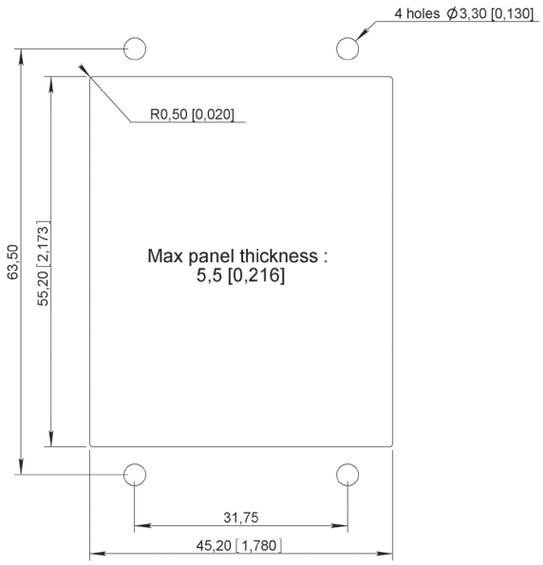

158 CONTACTS

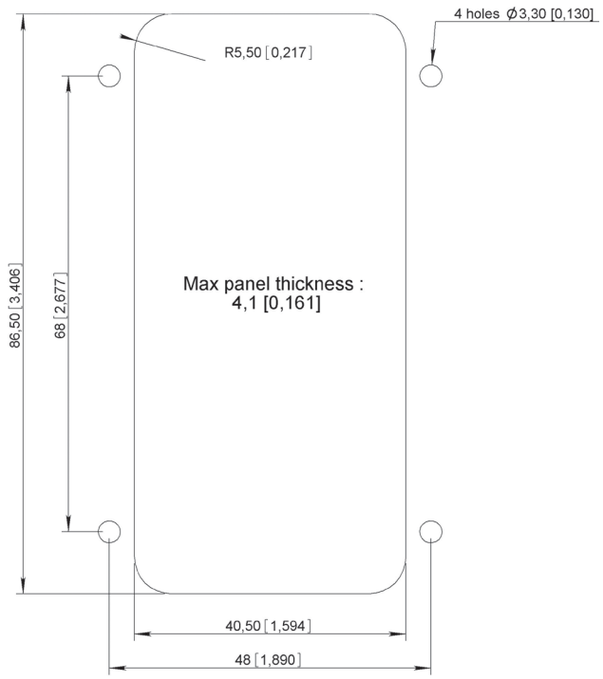

208 CONTACTS

Contacts

SPARE PARTS

Jackscrew and rack guide selection table

CABLES			NUMBER OF CONTACTS						
			14	20	26	34	42	50	75
Rack Guides	Without backshell	Male	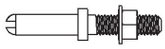 690962						
		Female	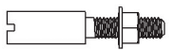 690952						
	With backshell	Male	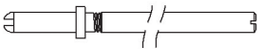 690963				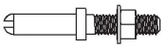 690963		
		Female	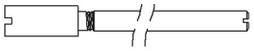 690963				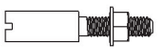 690963		
Fixed Guides	Without backshell	Male	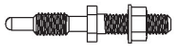 690961						
		Female	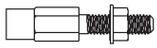 690951						
	With backshell	Male	690964				690961		
		Female	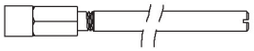 690954				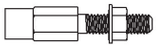 690951		
Rotating jackscrews	Without backshell	Male	690965						
		Female	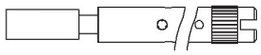 690955						
	With or without backshell	Male	690966			690949		690967	
			-					For 75 Contacts 690967001 Side Entry	
		Female	690956		690939				
			-					For 75 Contacts 690957001 Side Entry	

Contacts

SPARE PARTS

INSULATOR BLOCKS ONLY

NUMBER OF CONTACTS	BLOCK	
	TYPE P	TYPE R
14	690401	690501
20	690411	690511
26	690421	690521
34	690431	690531
42	690441	690541
50	690451	690551
75	690461	690561

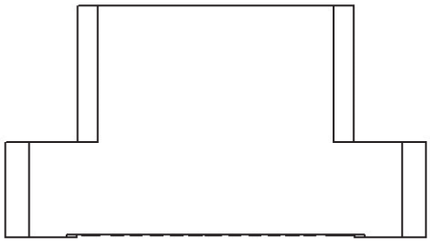

BACKSHELLS

When ordering backshells separately, do not forget to order the appropriate guides or jackscrews (refer to previous page for part numbers.)

NUMBER OF CONTACTS	BACKSHELL REFERENCE
14	690905
20	690908
26	690911
34	690914
42	690917
50	690920
75	Type P 690923
	Type R 690924

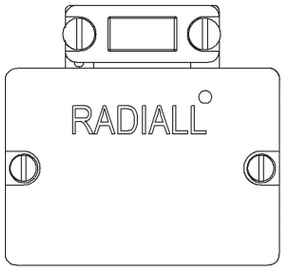

POLARIZATION CODE	POSITION
110	1
120	3
130	5
140	7
210	1 + 3
220	3 + 5
230	5 + 7
240	1 + 5
250	3 + 7
260	1 + 7

SHROUDS

Male shroud is to be mounted on insulator block P and female shroud on insulator block R.

Polarizing is to be positioned next to cavity 1 or A of the insulator block.

To order without polarization just use the six digits in the following table. To include polarization add the 3 digits suffix following the 6 digits part number. E.G: 690943120 (position 3).

NUMBER OF CONTACTS	SHROUDS	
	MALE	FEMALE
14	690940	690930
20	690941	690931
26	690942	690932
34	690943	690933
42	Not Available	
50	690945	690935
75	690946	690936

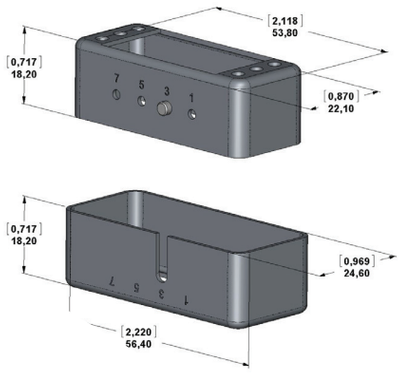

Contacts

WIRING INSTRUCTIONS

TWISTED PAIR CONTACT

WIRING INSTRUCTIONS A

CONTACT REF:	WIRE SIZES:
690060	AWG 26
690160	AWG 28
690061	AWG 30
690161	
690062	
690162	

BODY | CENTER CONTACT | INSULATOR BUSH | ADAPTER | FERRULE

1-WIRE STRIPPING

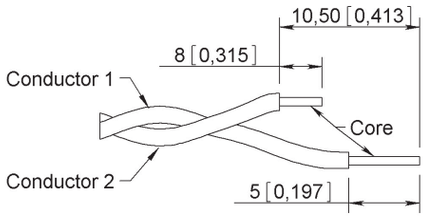

SOCKET CONTACT

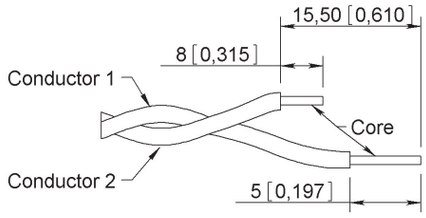

PIN CONTACT

2–WIRING INSTRUCTIONS

- Slide the ferrule over the twisted pair cable
- Following the type of contact, strip the 2 conductors to the shown dimensions here above
- Slide adaptor over conductor ①
- Slide insulator bush over conductor ①
- Put the core of the cable ① into the center contact (pin or socket) until it butts against the insulator bush
- Engage the assembly (cable + center contact) into the positioner of the crimping tool, and crimp center contact according to setting instructions page 8-24
- Engage the center contact into the body, with reasonable force push home. Check the dimensional position, following type of centre contact (pin/socket)
- Slide the adaptor on to the body up to the shoulder
- Place the core of conductor ② under the adaptor tab, and slide core into the helical slot
- Slide the ferrule over the adapter up to the shoulder of the body
- Engage the assembly into the positioner of the crimping tool, then crimp according to setting instructions, page 8-24

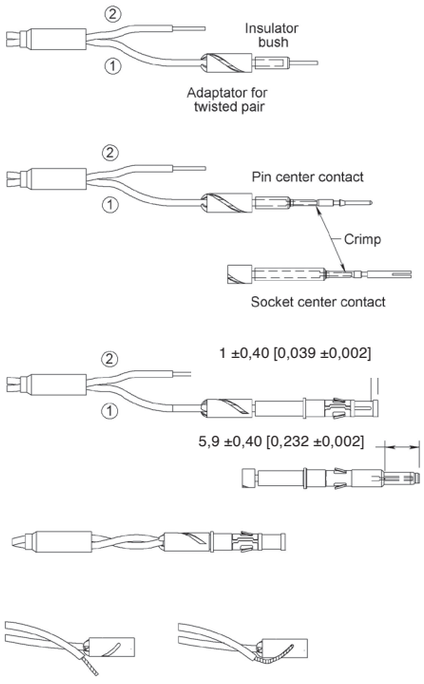

TWISTED PAIR CONTACT

CABLING INSTRUCTIONS B

CONTACT REF: 690070 WIRE SIZES: AWG 24
690170

BODY CENTER CONTACT INSULATOR BUSH ADAPTER FERRULE

1-WIRE STRIPPING

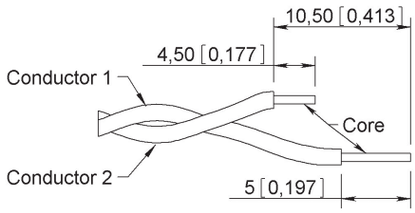

SOCKET CONTACT

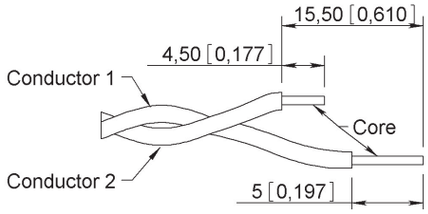

PIN CONTACT

2–WIRING INSTRUCTIONS

- Slide the ferrule over the twisted pair cable
- Following the type of contact, strip the 2 conductors to the shown dimensions here above
- Slide adaptor over conductor ①
- Slide insulator bush over conductor ①
- Put the core of the cable ① into the center contact (pin or socket) until it butts against the insulator bush
- Engage the assembly (cable + center contact) into the positioner of the crimping tool, and crimp center contact according to setting instructions page 8-24
- Engage the center contact into the body, with reasonable force push home. Check the dimensional position, following type of centre contact (pin/socket)
- Slide the adaptor on to the body up to the shoulder
- Place the core of the conductor ② into the straight slot, on the outer face of the adaptor
- Slide the ferrule over the adapter up to the shoulder of the body
- Engage the assembly into the positioner of the crimping tool, then crimp according to setting instructions, page 8-24

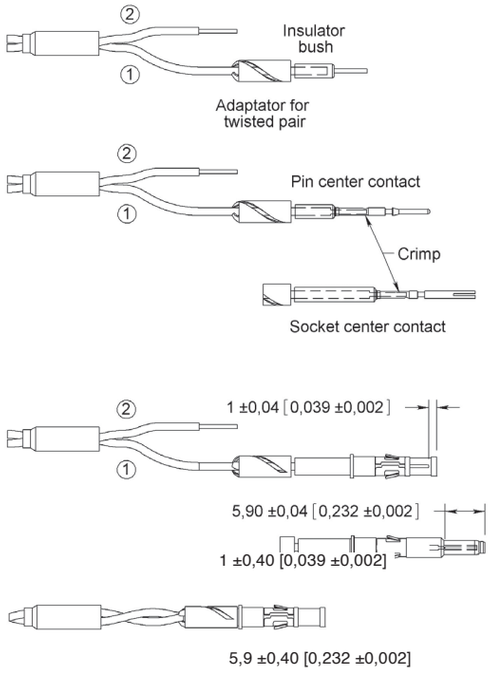

COAXIAL CONTACTS

CABLING INSTRUCTIONS C

CONTACT REF: 690020
690120

BODY **CENTER CONTACT** **INSULATOR BUSH** **FERRULE**

1-WIRE STRIPPING

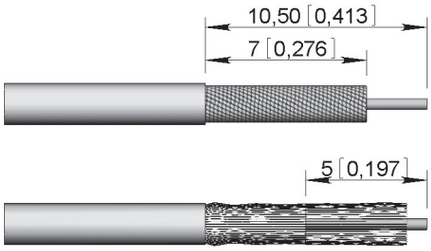

SOCKET CONTACT

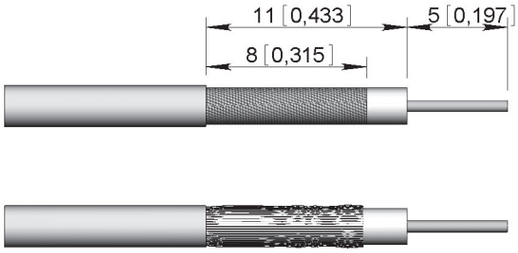

PIN CONTACT

2–WIRING INSTRUCTIONS

- Slide the ferrule over the coaxial cable
- Following the type of contact, strip the 2 conductors to dimensions shown above
- Comb the braid and slide on the insulator bush until it butts against the dielectric of the cable
- Place the core of the cable into the center contact so as to butt against the dielectric
- Engage the assembly into the positioner of the crimping tool and crimp according to instructions indicated on page 8-25
- Engage the centre contact into the body and with reasonable force push home, check the dimensional position of the centre contact (pin or socket)
- Pull down the braid over the body and slide the ferrule on to the body up to the shoulder
- Engage the assembly into the positioner of the crimping tool, then crimp according to instructions indicated on page 8-25

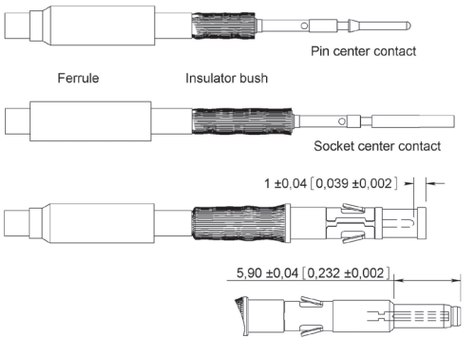

1 ±0,40 [0,039 ±0,002]

5,9 ±0,40 [0,232 ±0,002]

Contacts

COAXIAL CONTACTS

CABLING INSTRUCTIONS D

CONTACT REF: 690040 WIRE SIZES: AWG 24
690140

BODY

CENTER CONTACT

FERRULE

1-WIRE STRIPPING

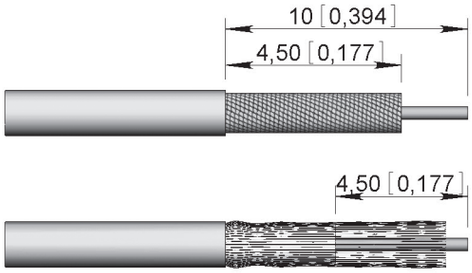

SOCKET CONTACT

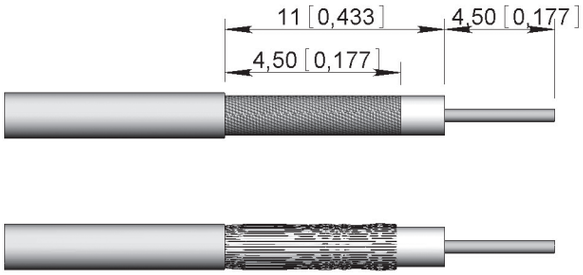

PIN CONTACT

2–WIRING INSTRUCTIONS

- Slide the ferrule over the coaxial cable
- Following the type of contact, strip the 2 conductors to dimensions shown above
- Place the core of the cable into the center contact so as to butt against the dielectric
- Engage the assembly into the positioner of the crimping tool, then crimp according to instructions indicated on page 8-25
- Engage the center contact into the body and with reasonable force push home, check the dimensional position of the center contact (pin or socket)
- Pull down the braid over the body and slide ferrule over braid up to the body shoulder
- Engage the assembly into the positioner of the crimping tool, then crimp according to instructions given on page 8-25

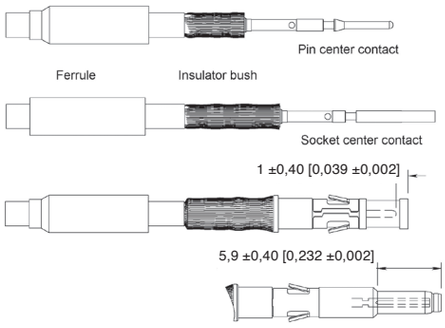

Contacts

TOOLS

CRIMP TOOLS

PART NUMBER	MIL SPEC P/N
282281	M22520/2-01
282291	M22520/1-01
282292	M22520/4-01

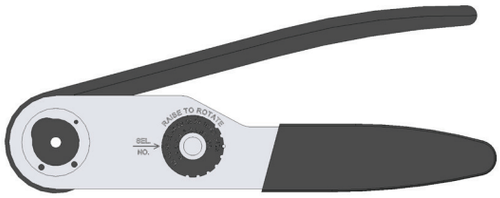

POSITIONERS

PART NUMBER	MIL SPEC P/N
282973	M22520/4-02
282976	Daniels TP616
282975	Daniles TP617
282981	M22520/2-04

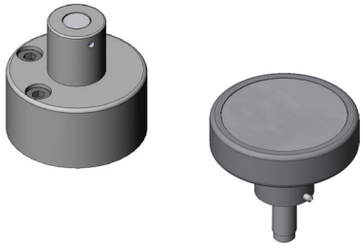

INSERTION TOOL

PART NUMBER	MIL SPEC P/N
282502	-
282921	Wire Wrap

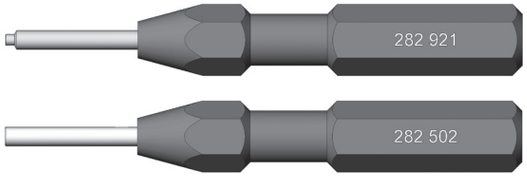

EXTRACTION TOOL

PART NUMBER
282501
282917
282920

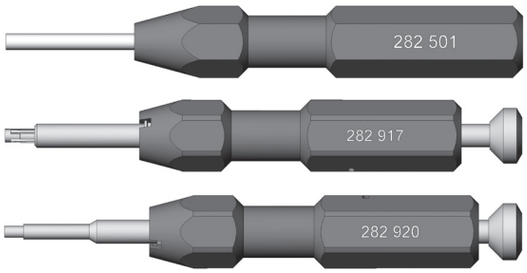

Notes

B & MCS-R SERIES

Section 9 Table of Contents

B SERIES

Introduction 9-2
Features 9-2
Applications 9-2
Product Overview 9-3
Technical Characteristics 9-4
How To Order Connectors ..... 9-5 to 9-6
Dimensions 9-7
Panel Cut-Outs 9-8

MCS-R SERIES

Introduction 9-9
Features 9-9
Applications 9-9
Product Overview 9-10
Technical Characteristics ..... 9-11 to 9-12
How To Order Connectors 9-13
Contacts Part Numbers 9-14
Dimensions 9-15
Panel Cut-Outs 9-15
Contact References 9-16
Locking System Code VP 9-17
Connectors Mounting Plates 9-18
Connectors Accessories ..... 9-19 to 9-20
Micro Coaxial Contacts Assembly Instructions 9-21
Tools 9-22

B Series

INTRODUCTION

The B series connectors are of robust design with fixed solder pot contacts of 15 A current rating. They are available in four different contact arrangements.

By their ruggedness, they are particularly suitable for rack and panel and cable to panel applications.

APPLICATIONS

The series B connectors ensures complete safety for the following applications:

Industries, transports, communications, power equipment and all specific civil and military electronic systems.

FEATURES

Plug and receptacle connectors are made of a thermoset insulator moulded onto a stainless steel fixing plate. Four contact arrangements are available, 8, 14, 24 and 32 contacts.

The receptacle box type connectors are fitted with round pin contacts. The plug connectors are fitted with spring blade contacts and two stainless steel guide pins of different diameter providing polarization and mating before the contacts to ensure correct alignment.

The pin contacts are in silver plated brass, the spring blade contacts are in silver plated bronze. The cambered configuration and elasticity procures a self wiping condition at each mating, ensuring high reliability.

The B series connector is only available with solder pot termination for gauge 16 wires. Standard receptacle connectors are fitted with floating eyelets, which allows 0.75 mm radial float.

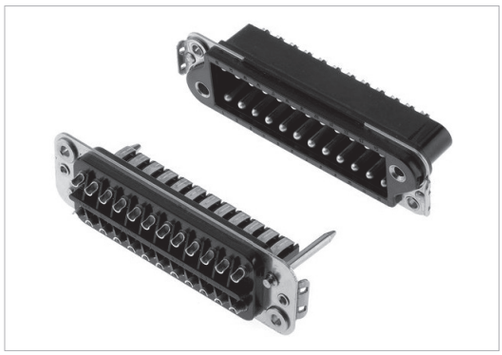

B Series

PRODUCT OVERVIEW

Detailed view of the various parts of this series connector

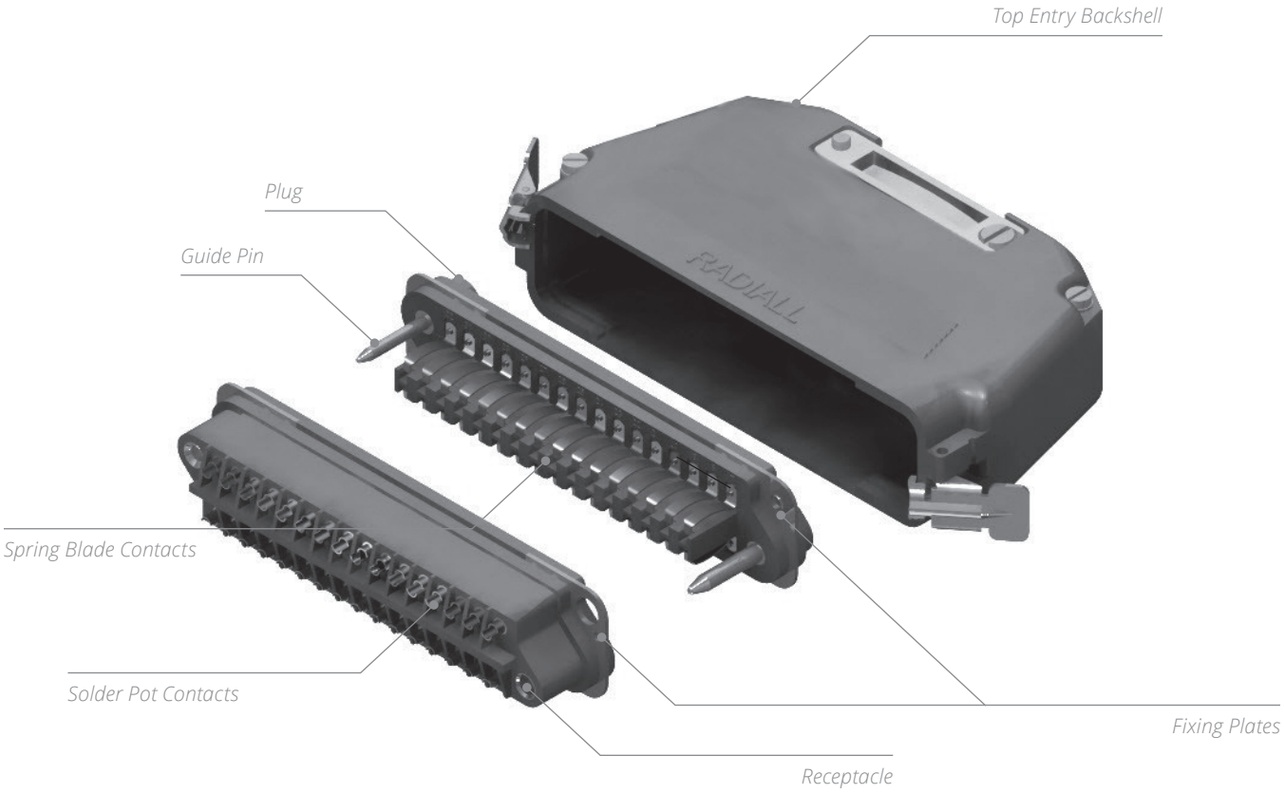

B Series

TECHNICAL CHARACTERISTICS

ELECTRICAL

- **Current Rating by Contact:** 15 A
- **Test Voltage:**
  - **Between Contacts:** > 1,500 Vrms
  - **Between Contacts and Earth:** > 2,000 Vrms
- **Insulation Resistance:** > 5,000 MΩ
- **Contact Resistance:** < 10 mΩ

MECHANICAL & ENVIRONMENTAL

- **Temperature Range:** -55 °C (-131 °F) to +125 °C (+257 °F)
- **Humidity:** 21 Days
- **Mating and Unmating:** 500 Cycles
- **Contact Retention:** > 50 N

MATERIALS

DESCRIPTION	MATERIAL/FINISH
Insulator Block	Glass Filled Phenolic
Pin Contacts (Male)	Brass-Silver Plated
Spring Blade Contacts (Female)	Bronze-Silver Plated
Guide Pins	Stainless Steel
Fixing Plate	Stainless Steel

MASSES G (OZ)

PLUG				
CONTACT ARRANGEMENT	08	14	24	32
WEIGHT	35 (1.25)	50 (1.80)	70 (2.50)	85 (3)
RECEPTACLE				
CONTACT ARRANGEMENT	08	14	24	32
WEIGHT	35 (1.25)	50 (1.80)	70 (2.50)	85 (3)
BACKSHELLS				
SIDE ENTRY	170 (6)	190 (6.70)	265 (9.35)	300 (10.60)
TOP ENTRY	180 (6.35)	200 (7.05)	280 (9.90)	320 (11.30)

B Series

HOW TO ORDER CONNECTORS

The following indications are to help you out when ordering B connectors.

When a receptacle connector is ordered with the locking system, in place of the floating eyelets, brackets are fitted whilst the locking clips are always fitted on the backshell.

For backshell and accessories please refer to pages 9-18 to 9-19 for ordering.

The plug connector is fitted with spring leaf contacts and the receptacle box type connector with pin contacts.

CONNECTOR PART NUMBER

B

SERIES PREFIX

CONTACT ARRANGEMENT
08–14–24-32

PRODUCT TYPE
M: Plug connector
F: Receptacle connector [2]

TERMINATION STYLE [1]
71: Ø 2.30 solder pot
73: Ø 3.20 solder pot
74: PC Tail
75: 5 mm terminal blade
78: NFC 20120 terminal blade
80: Screw cup termination

MODIFICATION CODE
NV: Without locking
VP: Brackets for locking system receptacle only (see page 9-17 for details)

Notes
1. Please refer to page 9-6 for views of termination styles.
2. Receptacle connector: only the 71 termination style is available.

B Series

TERMINATION STYLES

Following are the different termination styles available in details

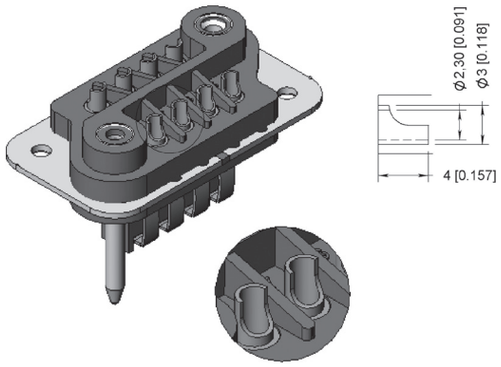

STYLE 71

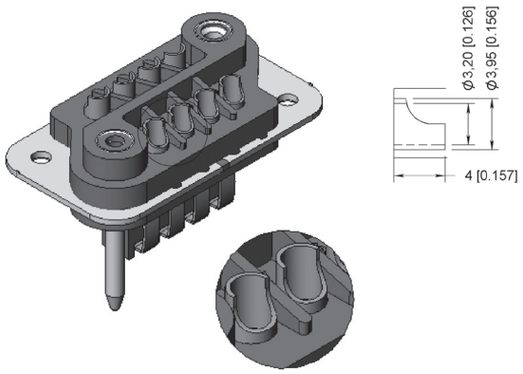

STYLE 73

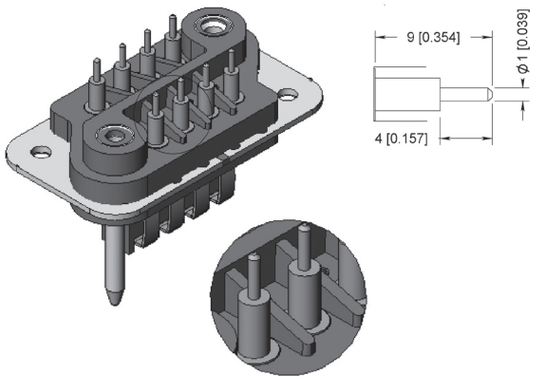

STYLE 74

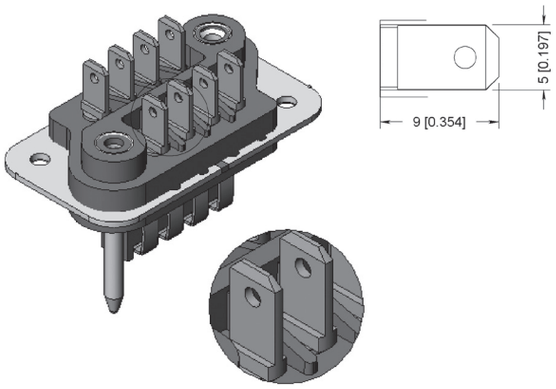

STYLE 75

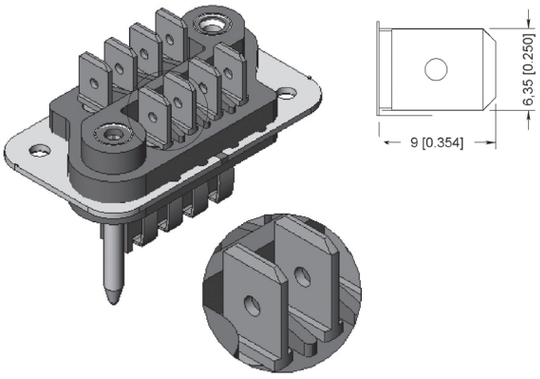

STYLE 78

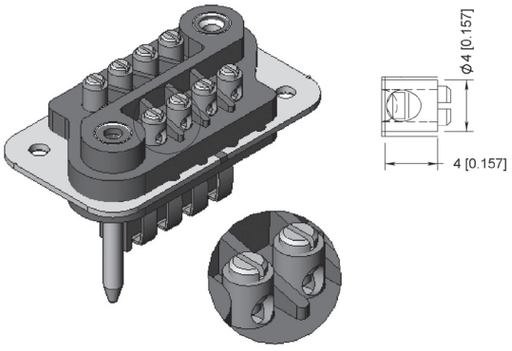

STYLE 80

B Series

CONTACT ARRANGEMENTS

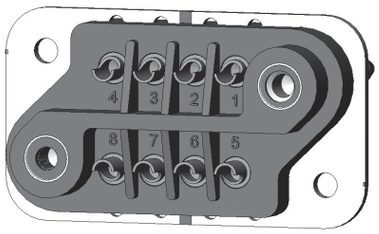

8 CONTACTS

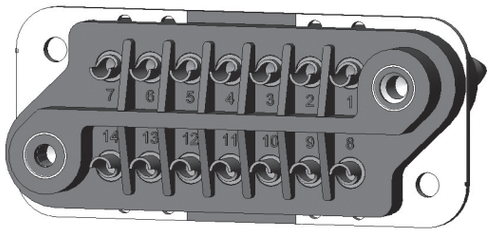

14 CONTACTS

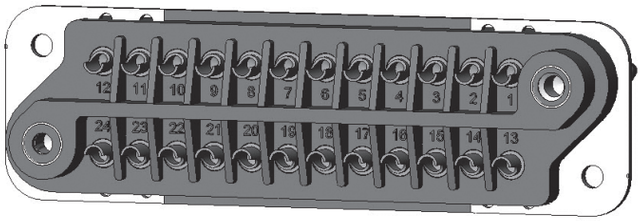

24 CONTACTS

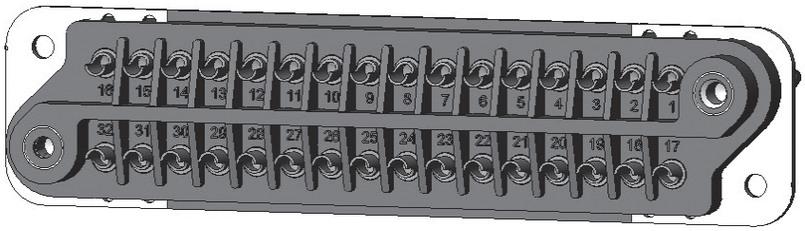

32 CONTACTS

B Series

DIMENSIONS

SINGLE SHELL DIMENSIONS-MM(INCH)

MALE

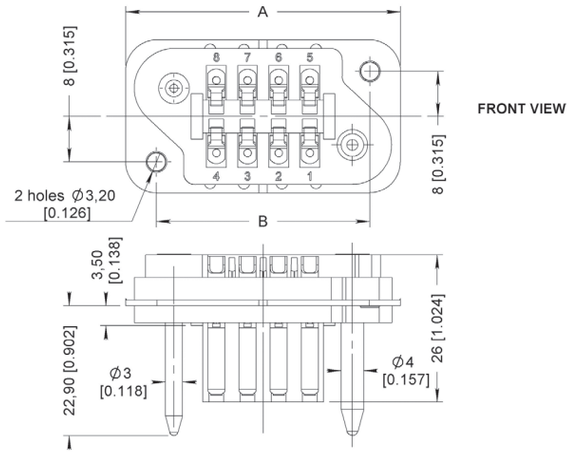

FEMALE

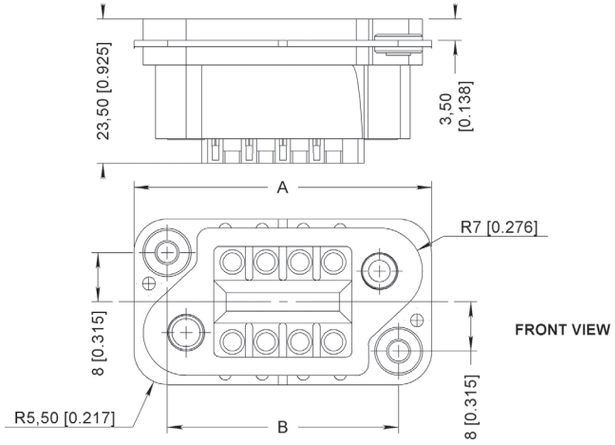

MATED SHELL DIMENSIONS

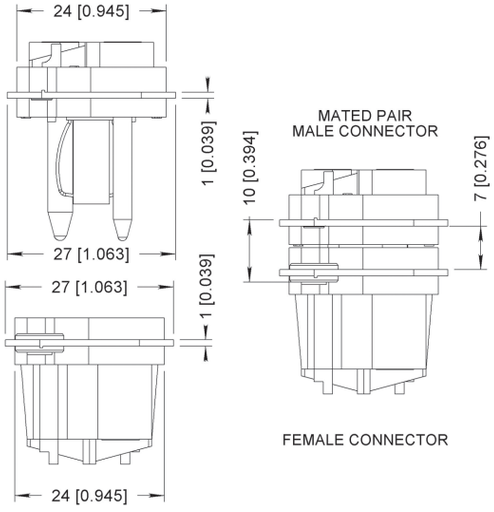

PANEL CUT-OUTS

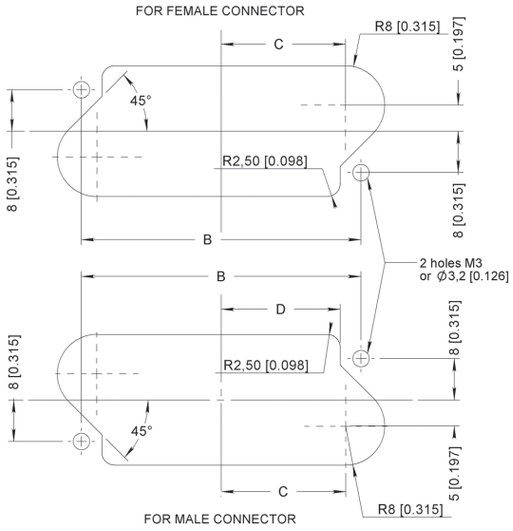

CONTACT ARRANGEMENT	PLUG & RECEPTACLE CONNECTOR DIMENSIONS MM(INCH)			
	A	B	C	D
08	48.5 (1.909)	37.5 (1.476)	15.75 (0.620)	15.5 (0.610)
14	65 (2.559)	54 (2.125)	24 (0.944)	23.5 (0.925)
24	92.5 (3.641)	81.5 (3.208)	37.75 (1.486)	37.5 (1.476)
32	114.5 (4.507)	103.5 (4.074)	48.75 (1.919)	48.5 (1.909)

MCS-R Series

INTRODUCTION

The MCSR series connectors are of robust design and available in four contacts arrangements, respectively 28, 48, 83 and 113 wire contacts, size gauge 16.

The same number of micro coaxial contacts can be installed instead of the wired contacts. A unique feature of the MCSR connector is that it's interchangeable with the B series, however, it is not fully intermateable.

The connectors may be adapted with die cast aluminium hoods, with two types of cable entries, either from the top or from the side.

APPLICATIONS

MCSR connectors are suitable for various applications in the following industrial fields: Communications and automation systems, electronic equipment, naval, aerospace, and defense applications.

FEATURES

The MCS-R series, plug and receptacle connectors are made of a thermostat insulator moulded onto a stainless steel fixing plate. Four contact arrangements are available, 28, 48, 83 and 113 contacts.

The plug connector is fitted with two guide pins of different diameter, which provides polarization and mate before the contacts ensuring a perfect alignment and reliability. The plug connector accepts socket wire contacts or pin micro coaxial contacts.

The receptacle connector accepts pin wire contacts or socket micro coaxial contacts and is fitted with floating eyelets which allows 0.75 mm radial float.

Three termination styles on the contacts are available, wire contacts with solder pot or crimp for wire size gauge 16 and micro coaxial contacts, crimp style.

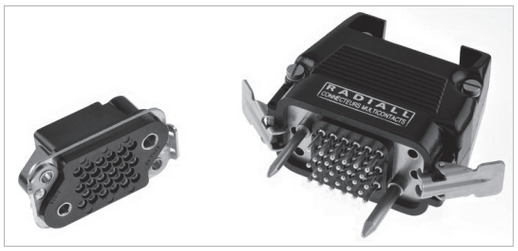

MCS-R Series

PRODUCT OVERVIEW

Detailed view of the various parts of this series connector

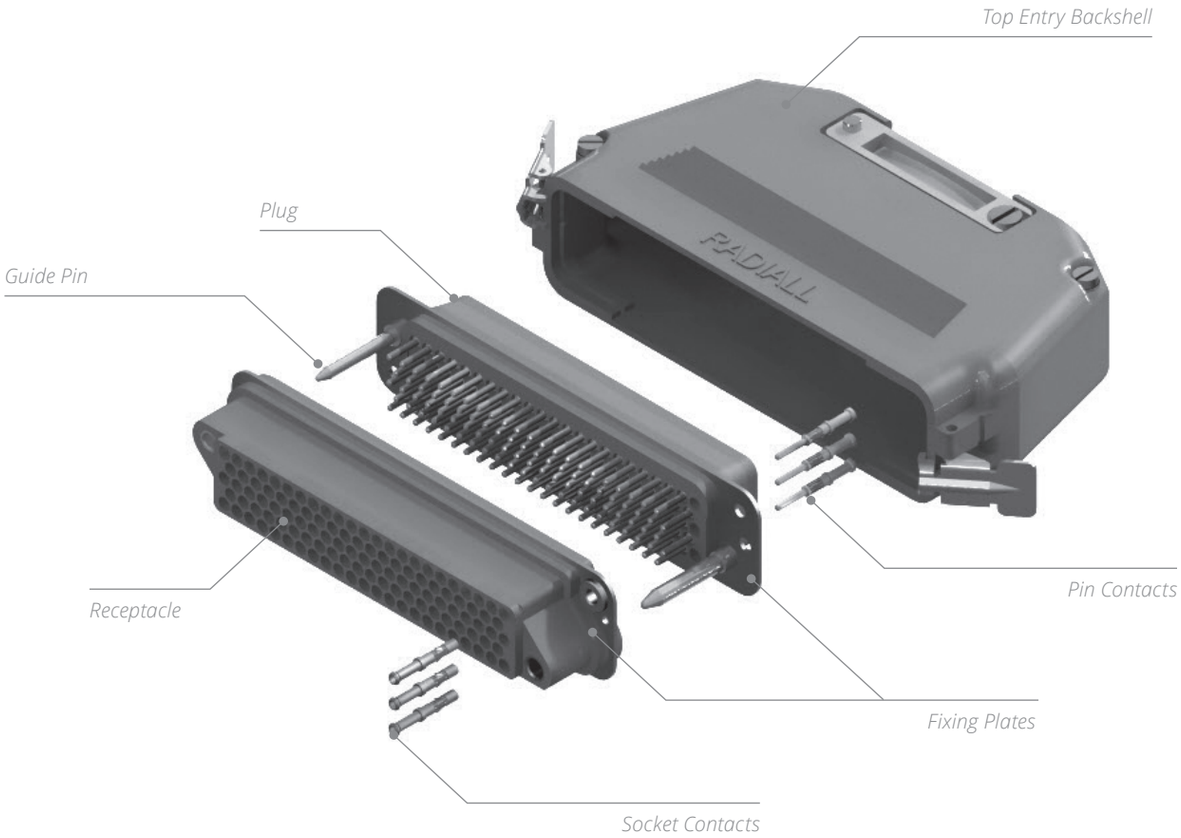

TECHNICAL CHARACTERISTICS

ELECTRICAL

- **Current Rating by Contact:** 13 A
- **Operating Voltage:** 350 Vrms at 50 Hz
- **Test Voltage:** 1,500 Vrms at 50 Hz
- **Insulation Resistance:** > 5,000 MΩ
- **Contact Resistance:** < 12 mΩ

ELECTRICAL WITH MICRO COAXIAL CONTACTS

- **Impedance:** 50 Ω
- **Operating Frequency Range:** 0 to 1,000 MHz
- **VSWR of Pair of Contacts:** < 1.4 from 0 to 1,000 MHz
- **Insertion Loss of a Pair of Contacts at 1,000 MHz:** < 0.20 dB
- **Test Voltage at Sea Level (Mated Pair):** 600 Vrms at 50 Hz
- **Insulation Resistance:** > 5,000 MΩ
- **Contact Resistance:** < 12 mΩ

MECHANICAL & ENVIRONMENTAL

- **Temperature Range:** -55 °C (-131 °F) to +125 °C (+257 °F)
- **Humidity:** 21 Days
- **Mating and Unmating:** 500 Cycles
- **Contact Retention:** > 50 N

MCS-R Series

MATERIALS

DESCRIPTION	MATERIAL/FINISH
Insulator Block	Glass Filled Phenolic
Guide Pins	Stainless Steel
Fixing Plate	Stainless Steel
Contacts	Copper Alloy–Gold over Nickel-Plated

MASSES G (OZ)

PLUG				
CONTACT ARRANGEMENT	28	48	83	113
WEIGHT	40 (1.45)	60 (2.15)	90 (3.20)	115 (4.05)
RECEPTACLE				
CONTACT ARRANGEMENT	28	48	83	113
WEIGHT	40 (1.45)	55 (1.95)	85 (3)	110 (3.90)
BACKSHELLS				
SIDE ENTRY	170 (6)	190 (6.70)	265 (9.35)	300 (10.60)
TOP ENTRY	180 (6.35)	200 (7.05)	280 (9.90)	320 (11.30)

MCS-R Series

HOW TO ORDER CONNECTORS

The following indications are useful when ordering MCS-R connectors.

When ordering a connector with its locking system VP, brackets fitted on the female connector replace the eyelets, whilst the locking clips are always fitted on the backshell.

Series MCS-R contacts are removable. Contacts shall be ordered separately following the termination style and quantities desired.

For backshells and accessories please refer to page 9-18 to 9-19 for ordering.

For contact references please refer to page 9-15.

MCSR

SERIES PREFIX

CONTACT ARRANGEMENT
028–048–083-113

PRODUCT TYPE
M: Plug connector
F: Receptacle connector

MODIFICATION CODE
00: Without locking
VP: Brackets for locking system receptacle only (see page 9-16 for detail)

TERMINATION STYLES

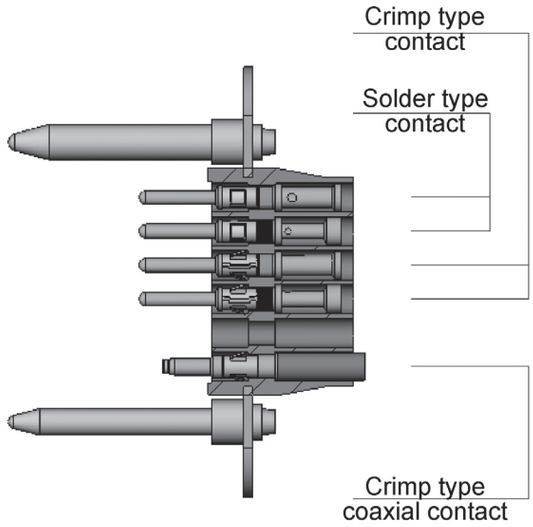

MCS-R Series

CONTACT ARRANGEMENTS

PLUG VIEW SHOWN

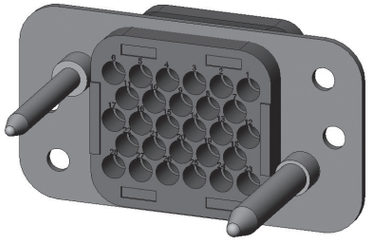

28 CONTACTS

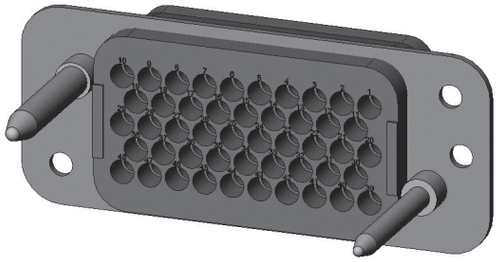

48 CONTACTS

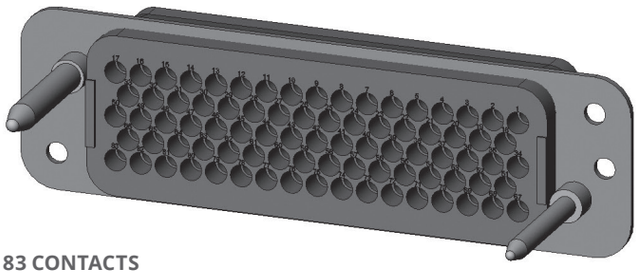

83 CONTACTS

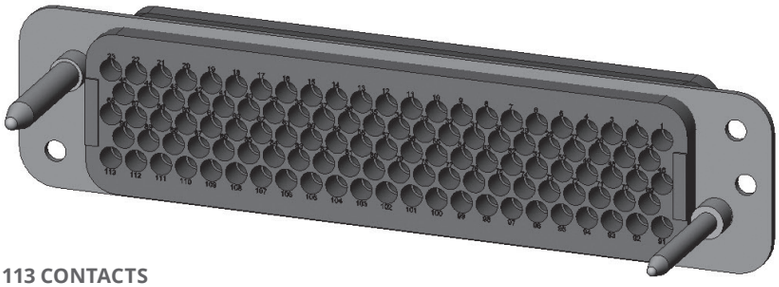

113 CONTACTS

MCS-R Series

DIMENSIONS

SINGLE SHELL DIMENSIONS MM (INCH)

PLUG

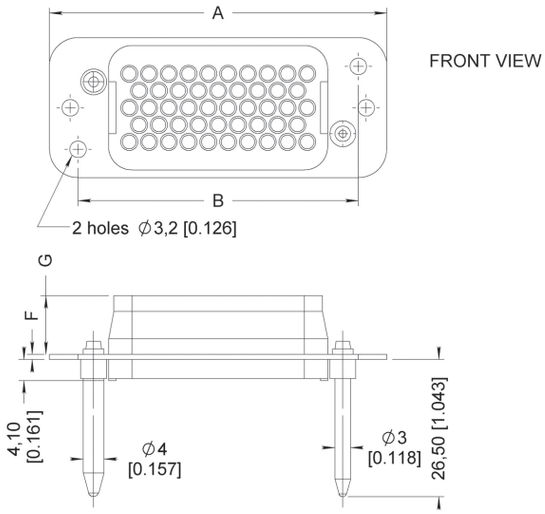

RECEPTACLE

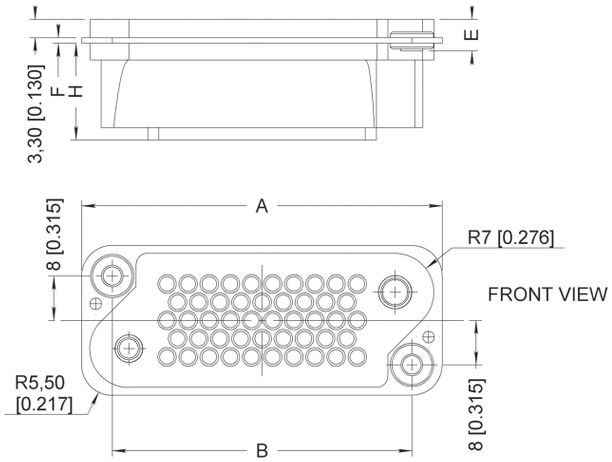

MATED SHELL DIMENSIONS

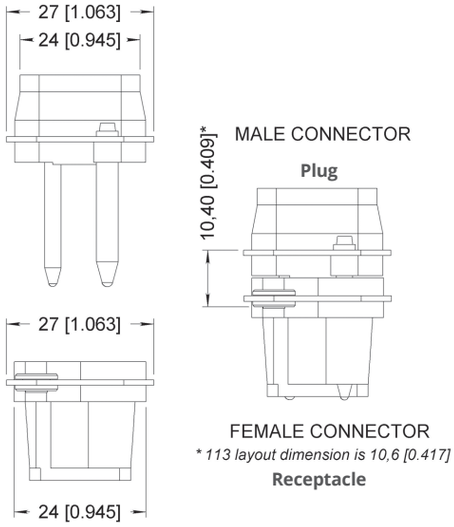

PANEL CUT-OUTS

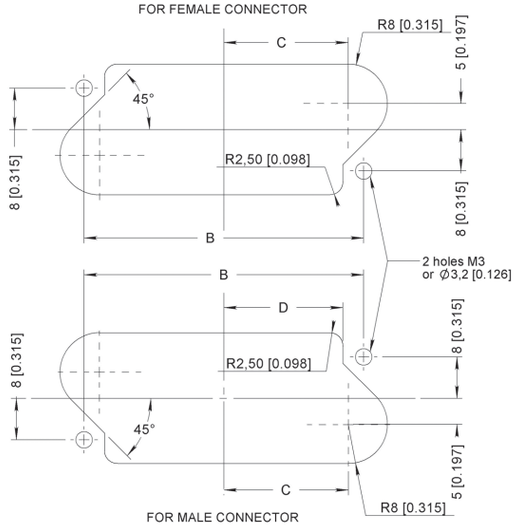

CONTACT ARRANGEMENT	PLUG & RECEPTACLE CONNECTOR DIMENSIONS MM (INCH)							
	A	B	C	D	E	F	G	H
028	48.5 (1.909)	37.5 (1.476)	15.75 (0.620)	15.5 (0.610)	5.3 (0.209)	1 (0.039)	11.5 (0.452)	17.7 (0.697)
048	65 (2.559)	54 (2.126)	24 (0.945)	23.5 (0.925)	5.3 (0.209)			
083	92.5 (3.642)	81.5 (3.209)	37.75 (1.486)	37.5 (1.476)	5.3 (0.209)			
113	114.5 (4.508)	103.5 (4.075)	48.75 (1.919)	48.5 (1.909)	5.5 (0.217)	1.2 (0.047)	11.3 (0.445)	17.5 (0.689)

MCS-R Series

CONTACT REFERENCES [1]

MICRO COAXIAL CONTACTS

			OUTER CONDUCTOR DESCRIPTION		CENTER CONDUCTOR DESCRIPTION	
CABLE TYPE	TYPE	PART NUMBER	CRIMPING TOOL	SETTING	CRIMPING TOOL	POSITIONNER
RG178 RG196 KX21	Pin	614120	282281 M22520/2-01	1	282292 M22520/4-01	282973 M22520/4-02
	Socket	690020				
RG174 RG188 RG316 KX3–KX22	Pin	614140	282281 M22520/2-01	2	282292 M22520/4-01	282973 M22520/4-02
	Socket	690040				
AWG26 Twisted Pair Cable Ø1.1	Pin	614160	282281 M22520/2-01	2	282292 M22520/4-01	282973 M22520/4-02
	Socket	690060				
AWG24 Twisted Pair Cable Ø1.3	Pin	614170	282281 M22520/2-01	2	282292 M22520/4-01	282973 M22520/4-02
	Socket	690070				

CRIMP WIRE CONTACTS [2]

CABLE TYPE	TYPE	PART NUMBER	CRIMPING TOOL	POSITIONER	EXTRACTION TOOL
AWG16 AWG18 AWG20	Pin	614200	282291 M22520/1-01	282975	282920
	Socket	690300			
AWG20 AWG22 AWG24	Pin	614200	282291 M22520/1-01	282976	282920
	Socket	690300			

SOLDER WIRE CONTACTS [2]

CABLE TYPE	TYPE	PART NUMBER	EXTRACTION TOOL
AWG16 AWG18 AWG20	Pin	614230	282920
	Socket	614330	
AWG20 AWG22 AWG24	Pin	614240	282920
	Socket	614340	

Notes:

1. For other termination please consult us

2. Stripping length for cable types AWG16-18-20 is 6 and for types AWG20-22-24 it is 5

MCS-R Series

LOCKING SYSTEM CODE VP

The brackets can only be used on the receptacle connector and enables it to be fastened securely when its mating half is fitted with a hood

The brackets replace the floating eyelets on the receptacle connector

On both series B and MCSR when VP code is ordered, the corresponding hood must be ordered with the male connector

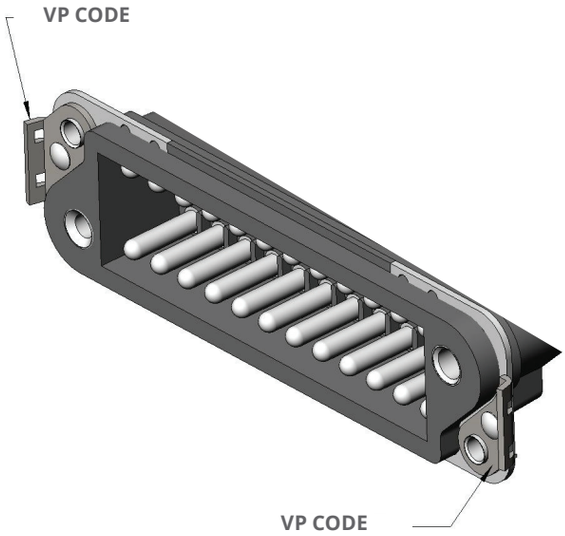

MCS-R Series

CONNECTORS MOUNTING PLATES

The mounting plates already blanked out, simplify the wall cut out on the rack or panel as well as on any other item designed to support the connector. The latter is directly fitted to the mounting plate, which can then be easily secured with accuracy on the equipment due to the four oblong holes of the mounting plate.

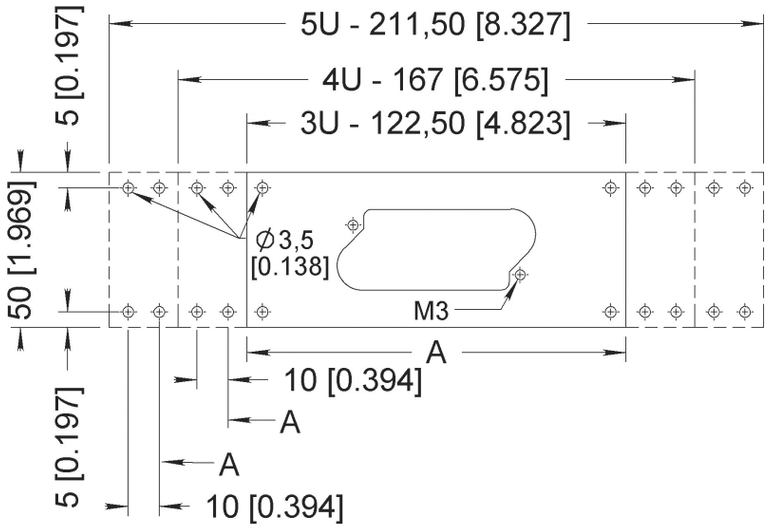

SERIES		REFERENCE FOLLOWING NUMBER OF CUT OUTS		
B	MCSR	3 U	4 U	5 U
14	48	PP314	PP414	PP514
24	83	PP324	PP424	PP524
32	113	-	PP432	-
Dimensions A mm (inch)		114.5 (4.508)	139 (5.472)	183.5 (7.224)

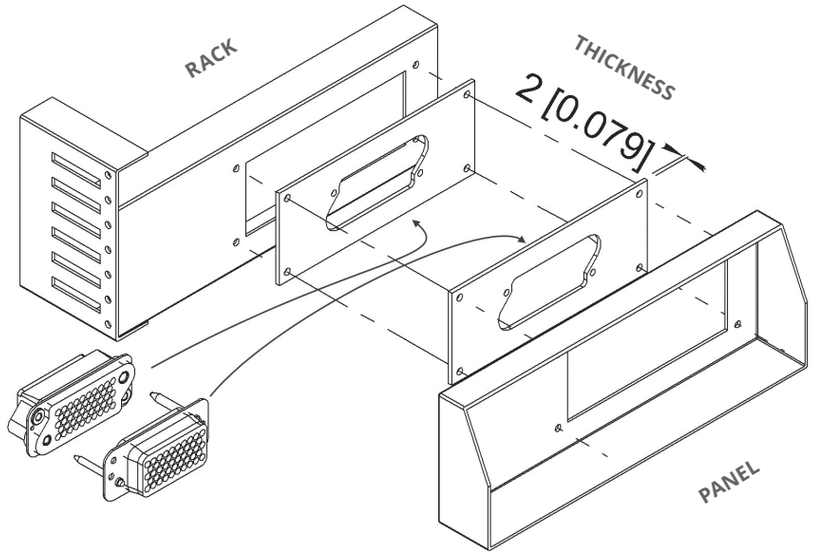

MCS-R Series

CONNECTORS ACCESSORIES

The backshells for both series B and MCSR are available in four sizes and are supplied in two halves which enables them to be fitted after the wiring of the connectors.

They are available either with TOP or SIDE (45°) cable entry.

Each backshell is fitted with a pair of locking clips, one fixed on each end. This allows the connector backshell assembly to be fastened securely to the mating connector fitted with the VP brackets.

TOP ENTRY

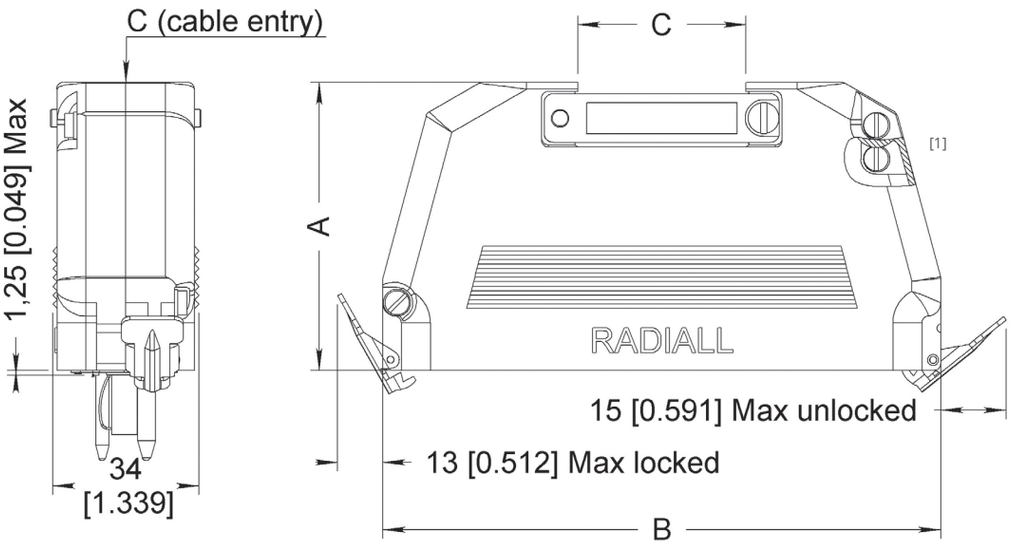

PART NUMBER FOR TOP ENTRY	NUMBER OF CONTACTS		B & MCSR DIMENSIONS MM (INCH)		
	B SERIES	MCSR SERIES	A	B	C
612813	8	28	52.5 (2.067)	60.5 (2.382)	26 × 10 (1.024 × 0.394)
612823	14	48		77 (3.031)	26 × 15 (1.024 × 0.591)
612837	24	83	65.5 (2.579)	104.5 (4.114)	38 × 20 (1.496 × 0.787)
612845	32	113		126.5 (4.980)	38 × 20 (1.496 × 0.787)

Notes

1. This screw is for grounding purpose.

MCS-R Series

SIDE ENTRY

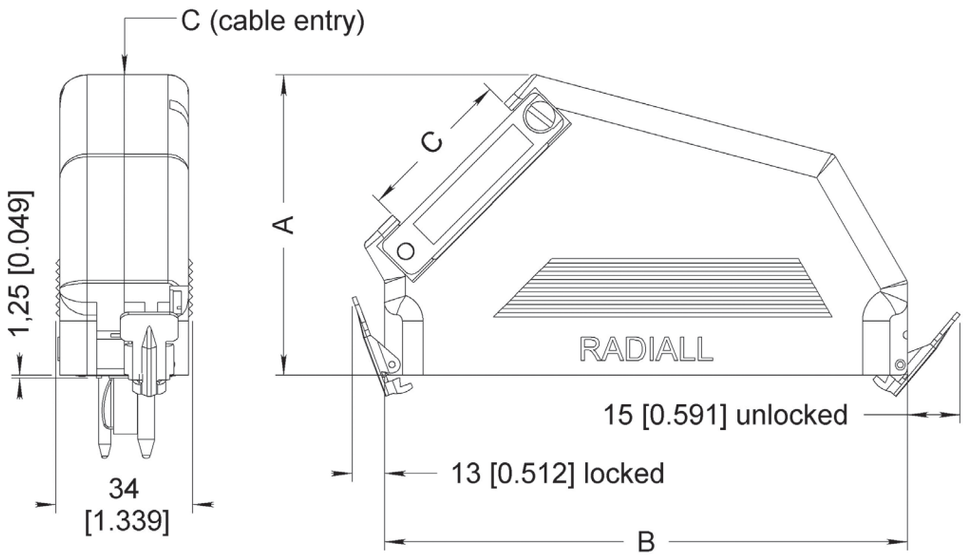

PART NUMBER FOR SIDE ENTRY	NUMBER OF CONTACTS		B & MCSR DIMENSIONS MM (INCH)		
	B SERIES	MCSR SERIES	A	B	C
612814	8	28	63 (2.480)	60.5 (2.382)	26 × 10 (1.024 × 0.394)
612824	14	48		77 (3.031)	26 × 15 (1.024 × 0.591)
612838	24	83	73 (2.874)	104.5 (4.114)	38 × 20 (1.496 × 0.787)
612846	32	113		126.5 (4.980)	38 × 20 (1.496 × 0.787)

MCS-R Series

MICRO COAXIAL CONTACTS ASSEMBLY INSTRUCTIONS

Three different modes of assembly are to be considered depending on the cable type used. The two first assemblies A and B are applicable for braid coaxial cables, whilst the third assembly C is applicable for twin conductor cable. The three mounting procedures are identical for both contact types, pin and socket.

MOUNTING PROCEDURE COAXIAL CABLES

After sliding the ferrule over the cable and stripping the latter to the dimensions shown in A1.

- Comb the braid in opening it up, strip the center wire to the dimension shown in A2.
- Slide the insulator bushing [1] over the dielectric .
- Place the center contact [2] over the conductor, the contact must butt against the insulator bushing [1].
- Crimp the center contact with tool 282281.
- Slide the cable and contact into the body [3] ensuring that it's pushed home, then trim back the braid over the body [3].
- Slide the ferrule over the braid up to the body shoulder.
- Place the assembly into tool 282292 and crimp the ferrule.

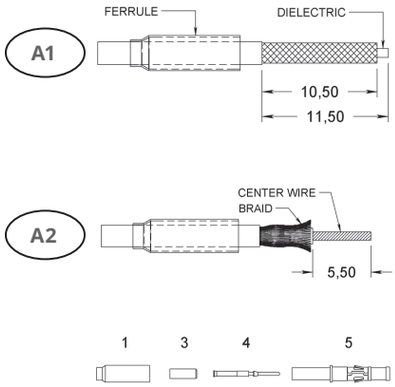

After sliding the ferrule over the cable, strip the latter to dimensions shown in B (mounting of coaxial contacts without insulator bushing).

- Comb the braid and place the center contact over the conductor butting it against the dielectric.
- Place the sub assembly into tool 282281 and crimp the center contact.
- The following steps are identical to those indicated in A.

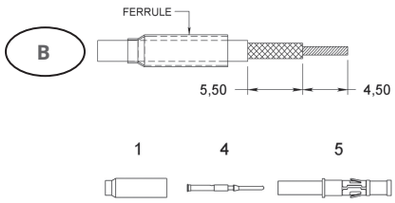

MICRO COAXIAL CONTACTS WITH TWIN CONDUCTOR CABLE [4]

After sliding the ferrule over the twin conductors and stripping them to dimensions shown in C.

- Slide the adaptor 2 and the insulator bushing [1] over conductor 1.
- Place the center contact [2] over the conductor, butting it against the sheath.
- Place the sub assembly into tool 282281 and crimp the centre contact.
- Slide the cable and contact into the body [3], ensuring that its home.
- Slide the adaptor 2 onto the body [3] against the shoulder.
- Place conductor 2 into the helical slot.
- Slide the ferrule over the adaptor and conductor 2, up to the shoulder of the body [3].
- Place the assembly into tool 282292 and crimp the ferrule.

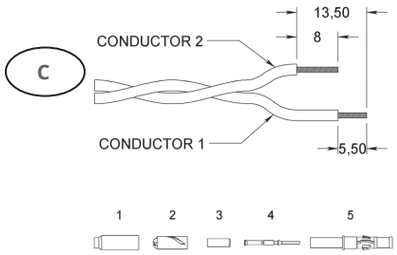

Notes

1. Insulating bush
2. Socket or pin contact
3. Contact body
4. Conductor 1 is for the center contact, whilst conductor 2 is for earthing.

MCS-R Series

TOOLS

CRIMP TOOLS

PART NUMBER	MIL SPEC P/N
282281	M22520/2-01
282291	M22520/1-01
282292	M22520/4-01

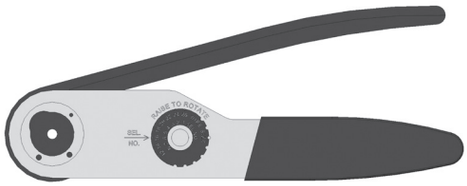

POSITIONERS

PART NUMBER	MIL SPEC P/N
282973	M22520/4-02
282976	Daniels TP616
282975	Daniels TP617

EXTRACTION TOOL

PART NUMBER
282920

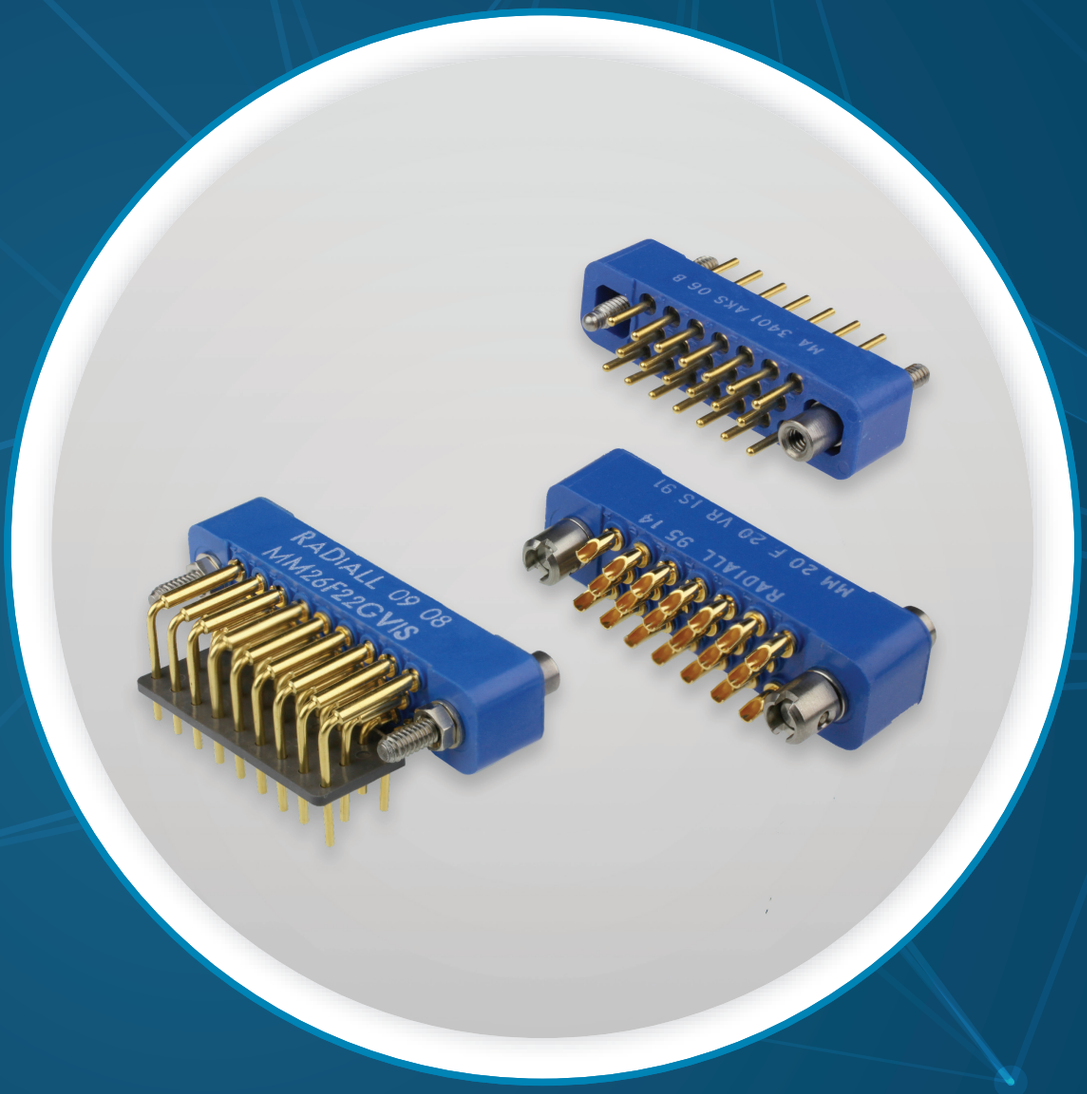
RADIALL 09 08
MM26F22GVIS
RADIALL 95 14
MM 20 F 20 VR 15 91
MA 3401 AXS 06 B

MM & MB SERIES

Section 10 Table of Contents

Introduction of MM and MB Series 10-2
Features 10-3
Applications 10-3

MM SERIES
Product Overview of MM Series 10-4
Technical Characteristics 10-5
How To Order Connectors 10-6
Connector Identification 10-6
Contact Arrangements 10-7
Termination Style 10-8
Printed Circuit Drill Pattern ..... 10-9 to 10-10
Guides & Jackscrews 10-11
Panel Cut-Out 10-12
Connector Mating Compatibility 10-13
Backshell Type Availability 10-13
Top Entry Backshells 10-14

MB SERIES
Product Overview of MB Series 10-15
Technical Characteristics 10-16
How To Order Connectors 10-17
Contact Arrangements 10-18
Termination Style 10-19
Panel Cut-Out 10-20
Printed Circuit Drill Pattern ..... 10-21 to 10-24
Guides & Jackscrews 10-25
Connector Mating Compatibility 10-26
Backshell Type Availability 10-27
Top Entry Backshells 10-28
Side Entry Backshells 10-29
Accessories 10-30

INTRODUCTION

The Radiall miniature and submaniature rectangular multicontact connectors meet the requirements of the standard MIL-C-28748 performance requirements. They are rugged connectors and offer high performance for high contact density.

The connectors in each series consist of an insulator with male and female contacts which include several pin sizes.

FEATURES

Each connector features a male guide at one end and a female guide at the other. This arrangement ensures polarization of the connector when coupled. These guides can be smooth (rack guides) or screw closing (fixed or rotating jackscrews).

The contacts male or female are made of copper base alloy plated gold over nickel. The female contacts have 4 slots which ensures perfect mating, constant contact pressure and excellent mechanical and electrical performance. The contacts have a slight amount of float in order to allow self alignment during mating. Each series includes a different termination type; solder pot, straight or right angle solder pin for PCB, and wrapping.

THE MM SERIES

This series consists of six sizes of connectors with contact arrangements for 7, 14, 20, 26, 34 and 50 size 22 contacts Ø 0.76 mm / 0.030 inch.

The series offers four types of terminations:

- Solder pot for wire (AWG 22 max)
- Straight solder pin for PBC
- Right angle solder pin for PBC
- Wire wrap

These connectors are fitted with rack guides or fixed or rotating jackscrews at each end. A protective covering for wire terminations can be installed on the connector.

THE MB SERIES

This series consists of twelve sizes of connectors with contact arrangements for 2, 3, 5, 11, 14, 20, 25, 34, 42, 50 and 75 size 20 contacts Ø 1 mm / 0.039 inch.

The series offers three types of terminations:

- Solder pot for wire (AWG 20 max)
- Straight solder pin for PBC
- Right angle solder pin for PBC

These connectors are fitted with rack guides or fixed or rotating jackscrews at each end.

Wires and soldered terminations for wire can be protected by either top or side entry backshells or by potting covers for 2 to 14 contacts connectors.

A range of top and side entry backshells with cable clamps in yellow anodized aluminium alloy are available. They are designed to protect the soldered wire connections, provide strain relief to the cable and facilitate the disengagement of the mated connectors.

Fitted with threaded posts they are suitable for connectors fitted with rack guides or fixed jackscrews. When fitted with rotating jackscrew guides they are fixed to the connectors without guides and jackscrews.

For the MB series there are also thermoplastic covers for “potting” ensuring that the terminated wires at the back of the insulator are protected.

APPLICATIONS

Their mass and volume make them particularly suitable for the following applications: civil and military, in-flight equipment, instrumentation, missile, etc.

Originally developed for rack and panel assemblies they can be adapted for cable to cable applications with cable clamp backshell.

© Dassault Aviation - K. Tokunaga

MM Series

PRODUCT OVERVIEW

Detailed view of the various parts of the MM series connector.

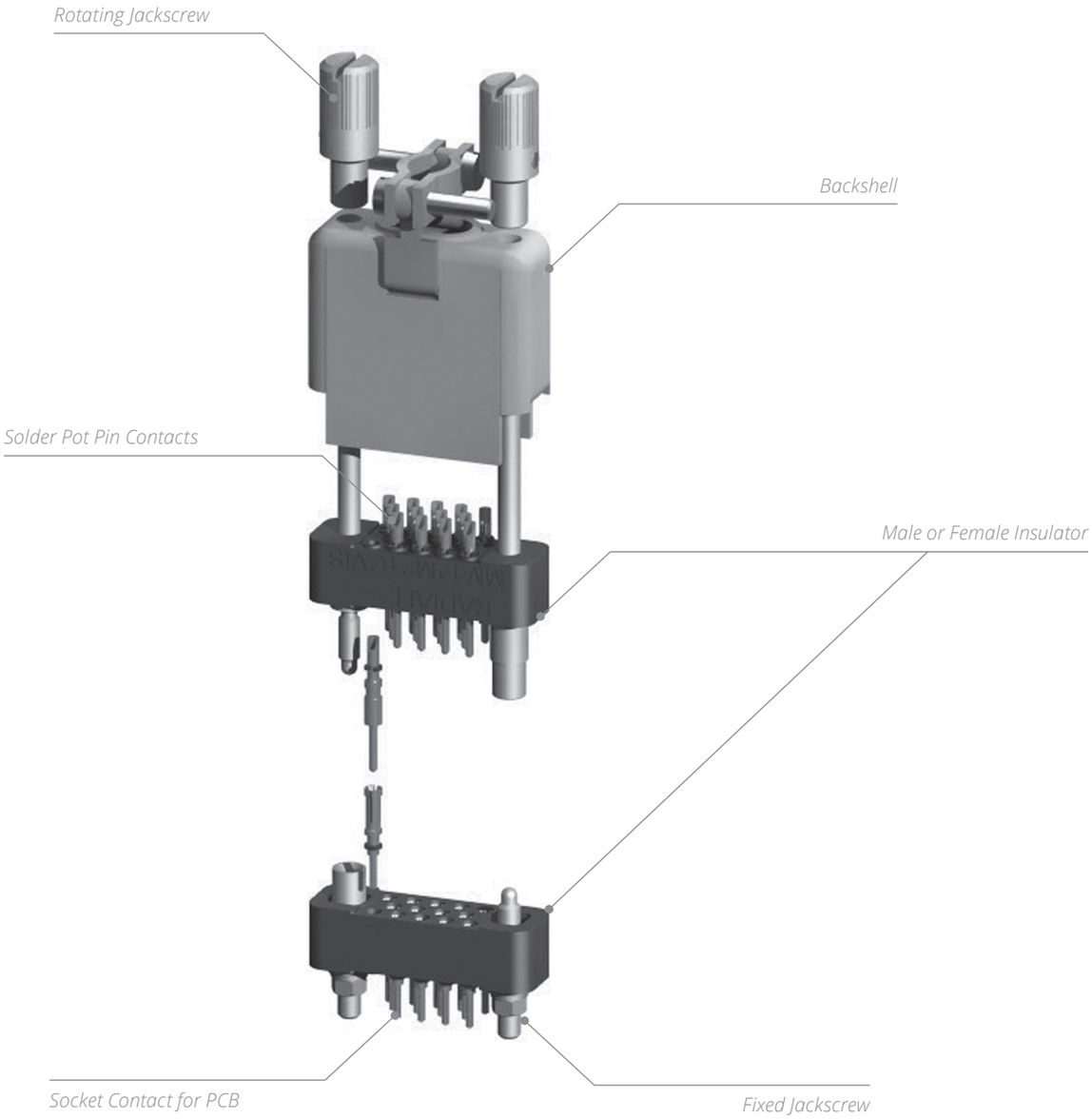

MM Series

TECHNICAL CHARACTERISTICS

ELECTRICAL

Conforms to MIL-C-28748 performance requirements and UTE-C-93426 HE611 standard.

- **Current Rating:** 5A
- **Test Voltage at Sea Level:** 1,000 Vrms/50 Hz
- **Operating Voltage at Sea Level:** 350 Vrms/50 Hz
- **Operating Voltage at 70,000 ft:** 90 Vrms/50 Hz
- **Insulation Resistance:** > 5,000 MΩ
- **Contact Resistance:** < 5 mΩ

MECHANICAL & ENVIRONMENTAL

Conforms to MIL-C-28748 performance requirements and UTE-C-93426 HE611 standard.

- **Temperature Range:** -55 °C (-131 °F) to 125 °C (257 °F)
- **Durability:** 500 Mating Cycles
- **Shock:** 100g/6ms
- **Vibration:** 20g / 10-2000 Hz
- **Humidity:** 56 Days
- **Contact Insertion Force:** 3N
- **Salt Spray:** 48 Hours

MATERIALS

DESCRIPTION	MATERIAL	FINISH
Insulator	Glass Filled Diallylphthalate Conform to MIL-M-14SDG-F	-
Pin Contact	Copper Alloy	Gold over Nickel
Socket Contact	Copper Alloy	Gold over Nickel
Guides & Jackscrews	Stainless Steel	-
Backshells	Aluminium Alloy	Yellow Anodized

MASSES g (oz)

WEIGHT OF CONNECTORS MATED

CONTACT ARRANGEMENT	07	14	20	26	34	50
WITHOUT GUIDES	2.8 (0.99)	5 (0.18)	6.6 (0.23)	8.1 (0.29)	12.1 (0.43)	15 (0.53)
WITH GUIDES OR JACKSCREW	4.7 (0.17)	7 (0.25)	8.4 (0.30)	10 (0.35)	13 (0.46)	17.1 (0.60)
WITH BACKSHELLS AND GUIDES OR JACKSCREWS	12 (0.42)	15.5 (0.55)	17 (0.60)	19.4 (0.68)	23.2 (0.81)	32.8 (1.16)

MM Series

HOW TO ORDER CONNECTORS

MM

SERIES

MM SERIES
Contact arrangement (refer to page 10-7)
07 - 14 - 20 - 26: 34: 50

CONTACT TYPE
M: Pin
F: Socket

TERMINATION STYLE (REFER TO PAGE 10-8)
20: Solder pot
21: Straight solder pin for PBC
22: Right angle solder pin for PBC
23: Wraping contact 1 wrap
24: Wraping contact 2 wrap
25: Wraping contact 3 wrap

GUIDES AND JACKSCREWS (REFER TO PAGE 10-11)
00: Without guides and jackscrews [1]
G3: Rack guides [2]
GV: Fixed jackscrews [2]
VR: Short rotating jackscrews
VL: Long rotating jackscrews [3]

THREAD, GUIDES OR JACKSCREWS
00: Without guides and jackscrews
IS: ISO (M2 × 0.4)
NC: 2-56 UNC

CONNECTOR IDENTIFICATION

The part number is printed on the insulator side

Notes
1. Connectors to be used with backshell HC (see page 10-13) and rotating jackscrews
2. Connectors to be used with backshell HA (see page 10-13)
3. VL jackscrew assembly is not available for termination style type 22

MM Series

CONTACT ARRANGEMENTS

MALE CONNECTOR

WIRING SIDE DIMENSIONS mm (in.)

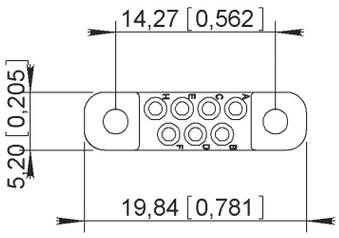

07

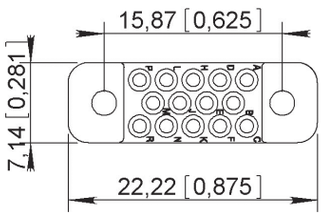

14

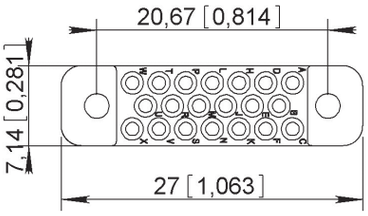

20

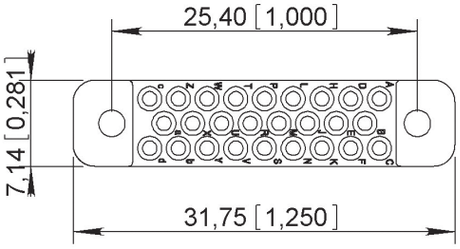

26

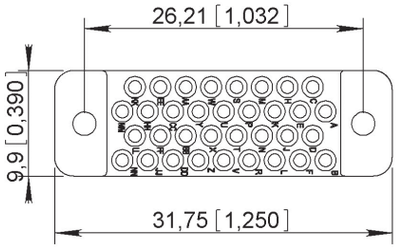

34

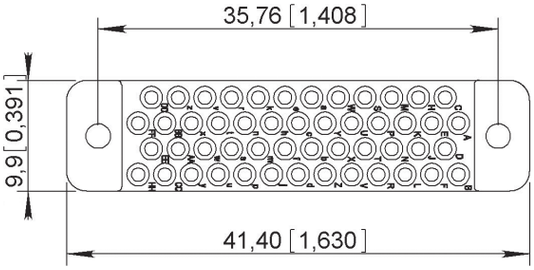

50

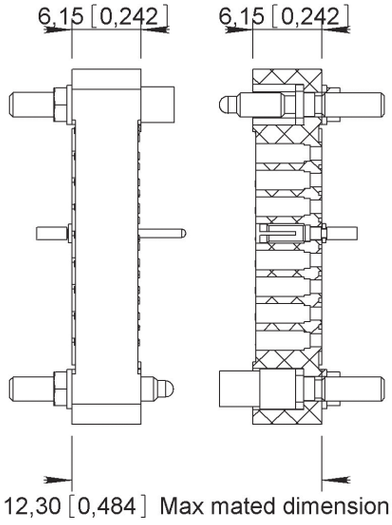

MATING DIMENSIONS

MM Series

TERMINATION STYLES

TYPE 20

Solder pot

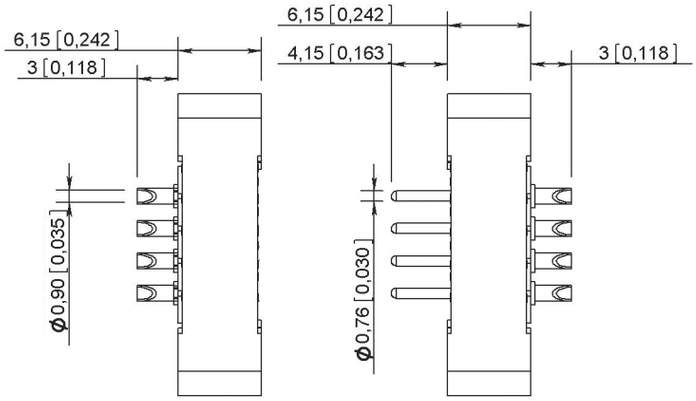

TYPE 21 [1]

Straight solder pin for PCB

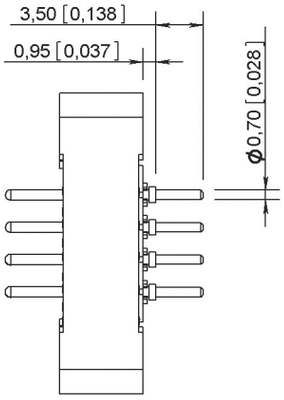

TYPE 22

Right angle solder pin for PCB

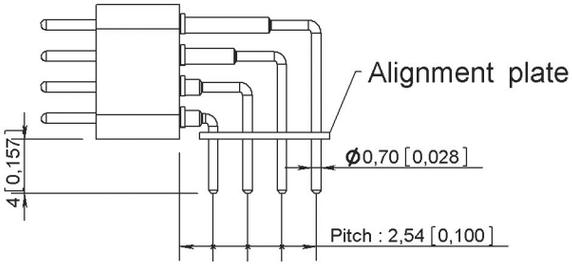

TYPE 23 - 24 - 25

23: Wire wrap termination (1 level)
24: Wire wrap termination (2 level)
25: Wire wrap termination (3 level)

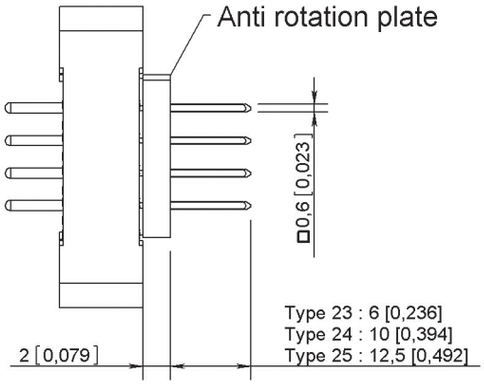

Notes

Dimensions mm (inch)

1. For termination style type 21, the connectors are supplied with insulating washers in order to make space between the insulator and the PCB

MM Series

PRINTED CIRCUIT DRILL PATTERN

TYPE 21 TERMINATION STYLE - Connector with socket contacts

PCB COMPONENT SIDE VIEW

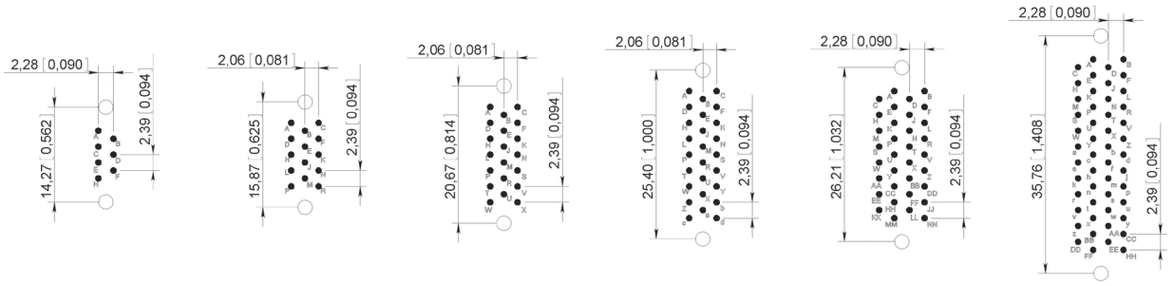

07 **14** **20** **26** **34** **50**

TYPE 21 TERMINATION STYLE - Connector with pin contacts

PCB COMPONENT SIDE VIEW

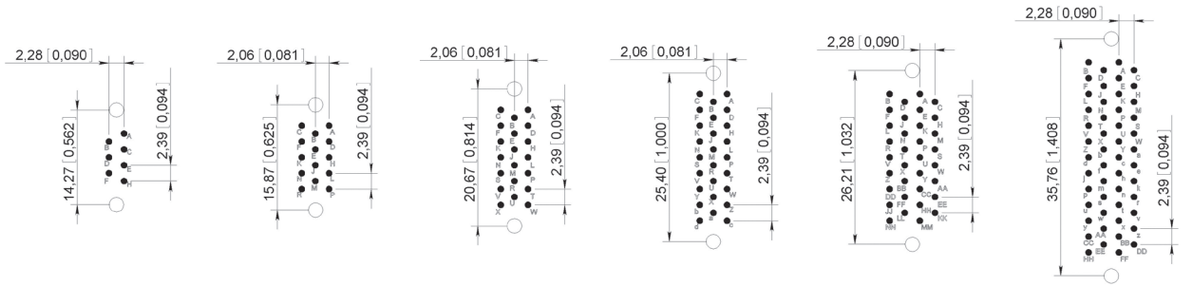

07 **14** **20** **26** **34** **50**

Notes

- *Printed circuit drilling 0.8 mm ±0.05 (0.031 ±0.002)*
- *Drilling to fix the connector. Required for guides G3 and GV fixing only 2.2 mm (0.087) for ISO guides and 2.4 mm (0.094) for UNC guides*

MM Series

TYPE 22 TERMINATION STYLE - Connector with socket contacts

PCB COMPONENT SIDE VIEW

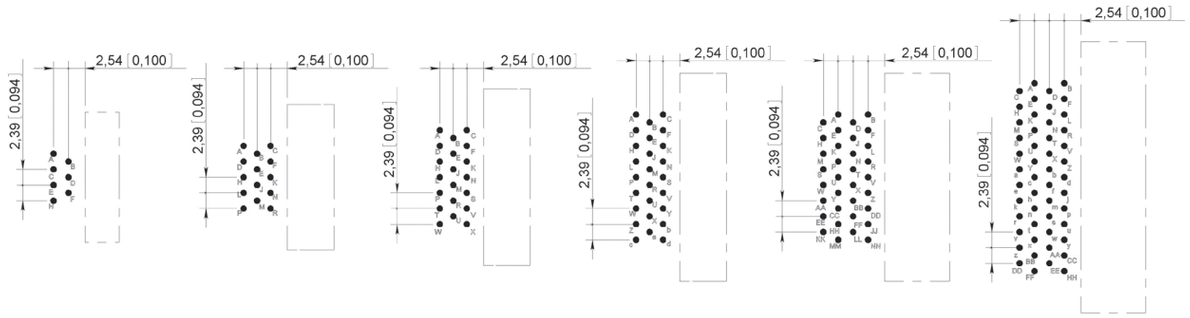

07 **14** **20** **26** **34** **50**

TYPE 22 TERMINATION STYLE - Connector with pin contacts

PCB COMPONENT SIDE VIEW

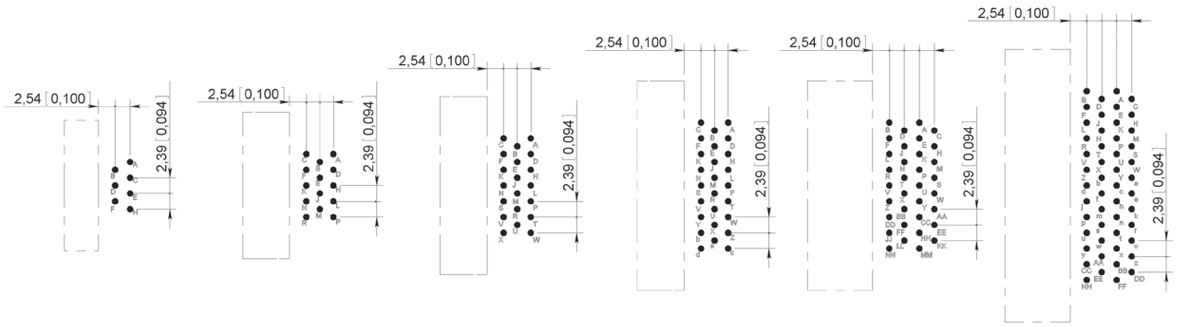

07 **14** **20** **26** **34** **50**

Notes:

• Printed circuit drilling 0.8 mm ±0.05 (0.031 ±0.002)

MM Series

GUIDES & JACKSCREWS

Stainless steel guides and jackscrews are supplied with either ISO (M2 x 0.4) or UNC (2-56 UNC) threads. The guides or jackscrews types (G3 – GV – VL – VR) and the type of thread (ISO or UNC) required are to be defined in the part number on page 10-6.

The standard configuration of guides and jackscrews is:

- Male guide (or jackscrew) at the end nearest contact A of the female connector.
- Female guide (or jackscrew) at the end nearest contact A of the male connector.

RACK GUIDES TYPE G3

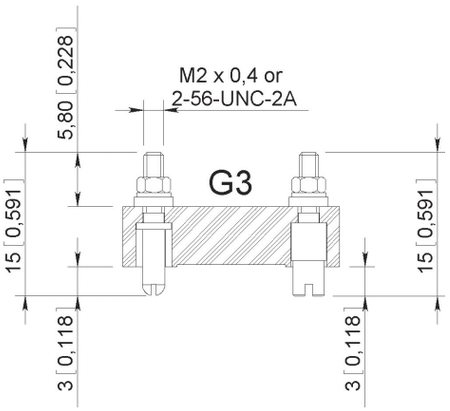

These guide and jackscrews can be used with backshell HA

FIXED JACKSCREWS TYPE GV

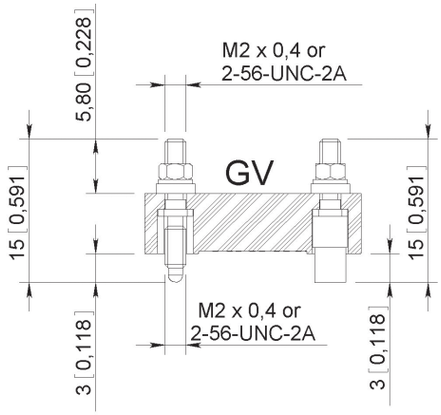

LONG AND SHORT ROTATING JACKSCREWS TYPE VL – VR

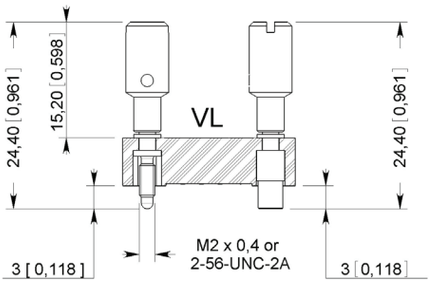

Mating torque: 0.2 Nm
Not available for termination style type 22
Cannot be used with any backshell

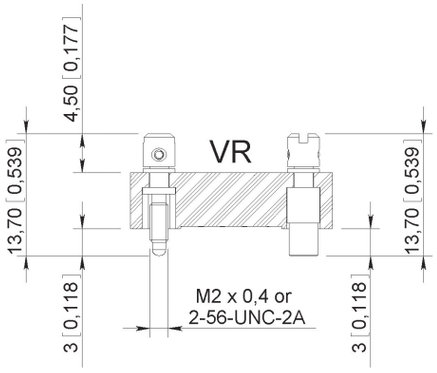

Mating torque: 0.2 Nm
Cannot be used with any backshell

MM Series

PANEL CUT-OUT

CONTACT ARRANGEMENT	DIMENSIONS mm (inch)		
	A	B	C
07	11.9 (0.468)	14.27 (0.562)	5.8 (0.228)
14	13.5 (0.531)	15.87 (0.625)	7.6 (0.299)
20	18.3 (0.720)	20.67 (0.814)	
26	23 (0.905)	25.4 (1)	
34	23.9 (0.940)	26.2 (1.031)	10.4 (0.409)
50	33.4 (1.315)	35.76 (1.408)	

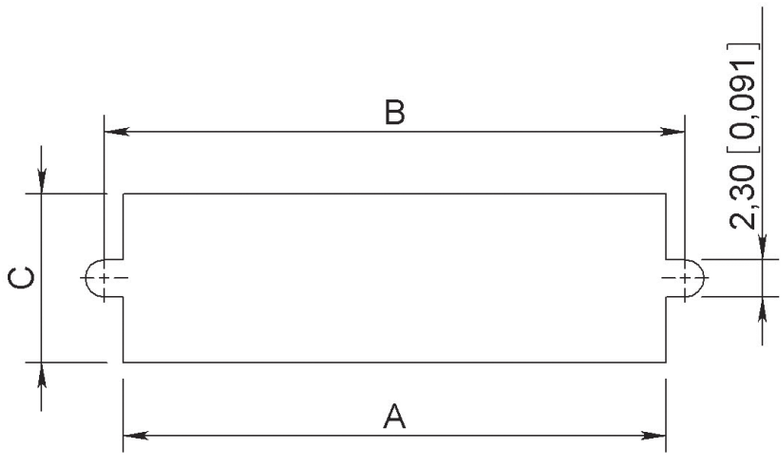

MM Series

CONNECTOR MATING COMPATIBILITY

TERMINATION STYLE TYPE 20 ONLY – Use with backshell

BACKSHELL TYPE

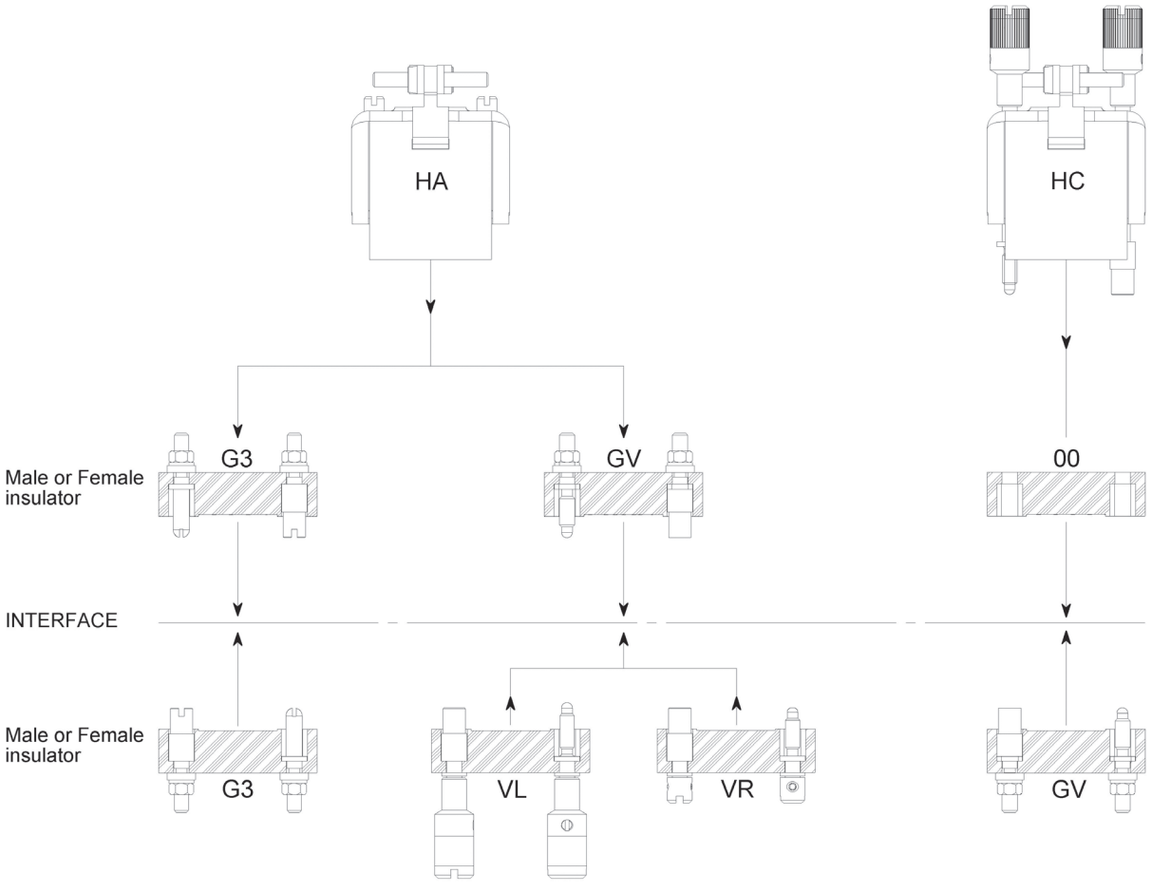

Use without backshell – All termination style type

BACKSHELL TYPE AVAILABILITY

THREAD		HOOD		THREAD	
NC (2-56 UNC)	ISO (M2 X 0.4)	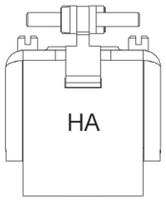	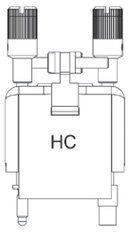	ISO (M2 X 0.4)	NC (2-56 UNC)
07	07			07	07
14	14			14	14
20	20			20	20
26	26			26	26
34	34			34	34
50	50			50	50

Fixing of hoods only suitable for insulator with termination style type 20 (solder pot)

MM Series

TOP ENTRY BACKSHELLS

TYPE HA

Backshells supplied with two internal threaded posts which are screwed into the guides G3 or jackscrews GV.

TYPE HC

Backshells supplied with two long rotating jackscrews. These backshells are mounted on connectors without guides or jackscrews (code 00).

PART NUMBERS

CONTACTS ARRANGEMENTS	TYPE HA		TYPE HC	
	WITH THREADS M2 X 0.4	WITH THREADS 2-56 UNC	WITH SCREWS M2 X 0.4	WITH SCREWS 2-56 UNC
07	MM07HAIS	MM07HANC	MM07HCIS	MM07HCNC
14	MM14HAIS	MM14HANC	MM14HCIS	MM14HCNC
20	MM20HAIS	MM20HANC	MM20HCIS	MM20HCNC
26	MM26HAIS	MM26HANC	MM26HCIS	MM26HCNC
34	MM34HAIS	MM34HANC	MM34HCIS	MM34HCNC
50	MM50HAIS	MM50HANC	MM50HCIS	MM50HCNC

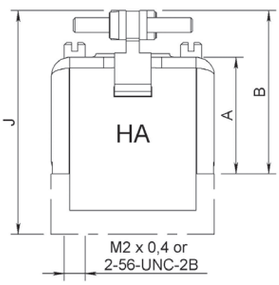

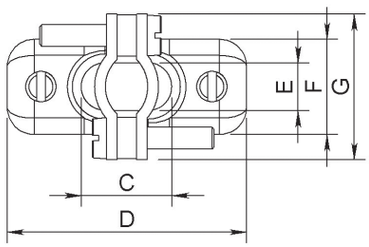

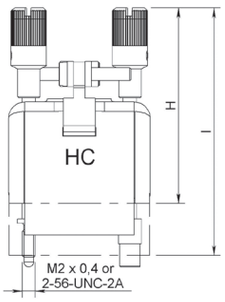

MATING TORQUE: 0.15 Nm

CONTACT ARRANGEMENT	A	B	C	D	E	F	G	H	I	J
07	15.9 (0,626)	23.15 (0.911)	5.5 (0.216)	19.8 (0.779)	4 (0.157)	6.8 (0.268)	13.5 (0.531)	31.9 (1.256)	38.2 (1.504)	29.4 (1.157)
14			10 (0.394)	22.2 (0.874)	6 (0.236)	8.8 (0.346)				
20			14 (0.551)	27 (1.063)						
26				31.8 (1.252)						
34			19 (0.748)		9.5 (0.374)	11.8 (0.464)	15.7 (0.618)			30.4 (1.197)
50	30.5 (1.201)	38.5 (1.516)	29.7 (1.169)	41.4 (1.630)				46.6 (1.835)	52.9 (2.083)	44.8 (1.764)

Notes:

Dimensions mm (inch)

Fixing of backshells only suitable for insulator with termination style type 20 (solder pot).

MB Series

PRODUCT OVERVIEW

Detailed view of the various parts of the MB series connector.

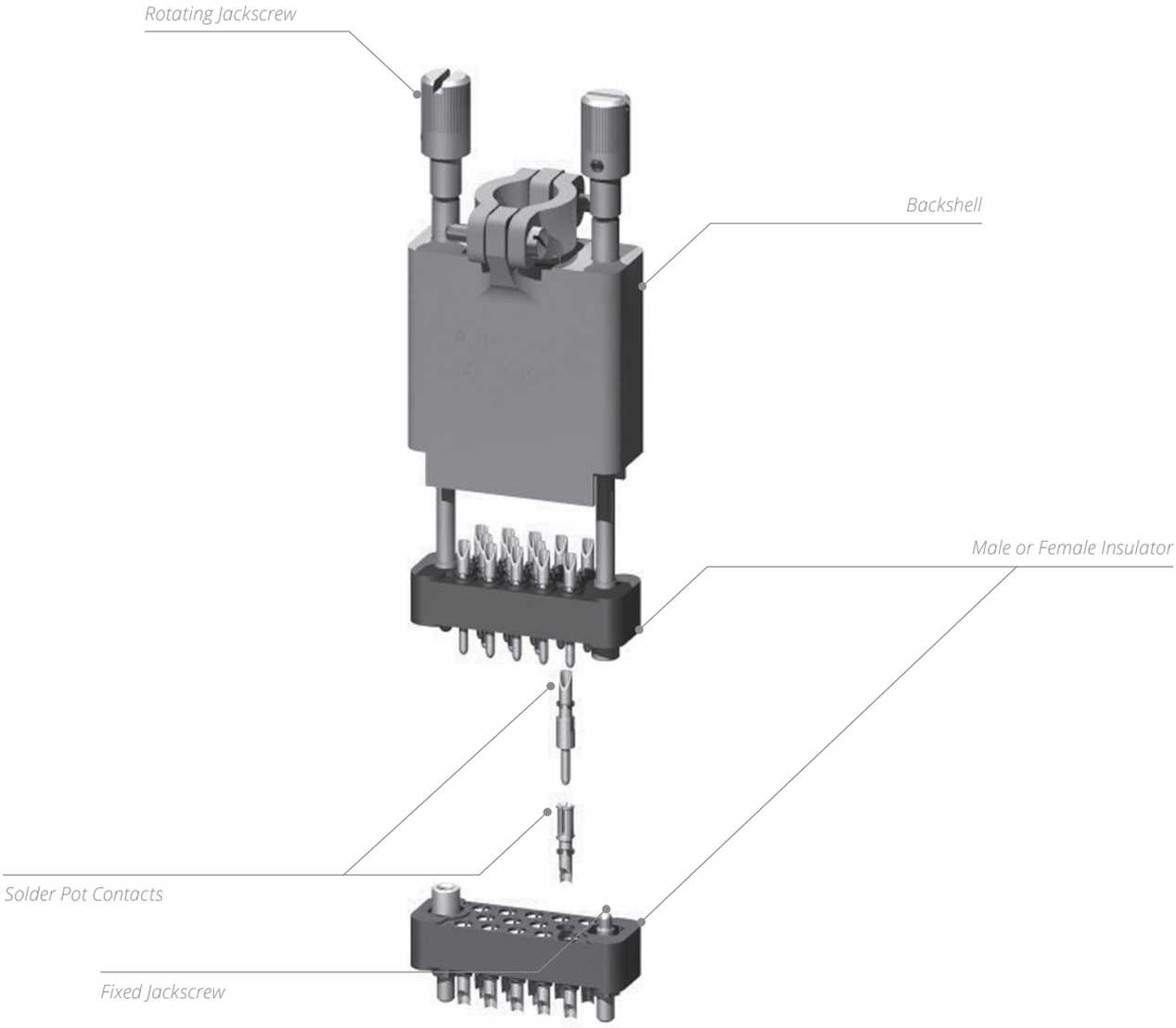

MB Series

TECHNICAL CHARACTERISTICS

ELECTRICAL

Conforms to MIL-C-28748 performance requirements standard.

- **Current Rating:** 7.5A
- **Test Voltage at Sea Level:** 1,500 Vrms/50 Hz
- **Operating Voltage at Sea Level:** 500 Vrms/50 Hz
- **Insulation Resistance:** > 5,000 MΩ
- **Contact Resistance:** < 5 mΩ

MECHANICAL & ENVIRONMENTAL

- **Temperature Range:** -55 °C (-131 °F) to 125 °C (257 °F)
- **Durability:** 500 Mating Cycles
- **Shock:** 50g/11ms
- **Vibration:** 20 g/10-2,000 Hz
- **Humidity:** 21 Days
- **Contact Insertion Force:** 3 N
- **Salt Spray:** 48 Hours

MATERIALS

DESCRIPTION	MATERIAL	FINISH
Insulator	Glass Filled Diallylphthalate Conform to MIL-M-14SDG-F	-
Pin Contact	Copper Alloy	Gold over Nickel
Socket Contact	Copper Alloy	Gold over Nickel
Guides & Jackscrews	Stainless Steel	-
Backshells	Aluminium Alloy	Yellow Anodized
Spring Lever Clamps	Stainless Steel	-
Potting Moulds	Nylon	-

MASSES g (oz)

WEIGHT OF CONNECTORS MATED

CONTACT ARRANGEMENT	02	03	05	07	11	14	20	26	34	42	50	75
Without Guides	2.2 (0.07)	2.30 (0.81)	4 (0.14)	3.7 (0.13)	5.6 (0.20)	6.4 (0.23)	8.6 (0.30)	11 (0.39)	15.2 (0.54)	17.6 (0.62)	20.5 (0.72)	32.7 (1.15)
With Rack Guides	3.9 (0.14)	4 (0.14)	4.7 (0.17)	5.4 (0.19)	7.3 (0.26)	8.1 (0.29)	10.3 (0.36)	12.7 (0.45)	16.9 (0.60)	19.3 (0.68)	22.2 (0.78)	36.2 (1.28)
With Backshells & Jackscrew	-	-	-	12.4 (0.44)	17.5 (0.62)	20.4 (0.72)	28 (0.99)	31.5 (1.11)	37.2 (1.31)	-	45.2 (1.59)	62 (2.19)

MB Series

HOW TO ORDER CONNECTORS

MB

SERIES

MB SERIES
Contact arrangement (refer to page 10-18)
02: 03 : 05 : 07 - 11 - 14
20: 26 : 34 : 42 - 50 - 75

CONTACT TYPE
M: Pin
F: Socket

TERMINATION STYLE (REFER TO PAGE 10-19)
85: Solder pot
86: Straight solder pin for PCB
87: Right angle solder pin for PCB

GUIDES AND JACKSCREWS (REFER TO PAGE 10-25)
00: Without guides and jackscrews [1]
G1: Rack guides [2]
GV: Fixed jackscrews [2]
VR: Short rotating jackscrews
VL: Long rotating jackscrews [3]

SHIPMENT WITHOUT BACKSHELL AND ACCESSORIES

THREAD, GUIDES OR JACKSCREWS
00: Without guides and jackscrews
IS: ISO (M2 x 0.4)
NC: 2-56 UNC

Notes:
1. Connectors to be used with backshell HC and HV (see page 10-26) or rack guides G1
2. Connectors to be used with backshell HA and HL (see page 10-26)
A spring clip locking system can be fitted (see page 10-30)
3. VL jackscrews assembly is only available for termination style type 85

MB Series

CONTACT ARRANGEMENTS

02

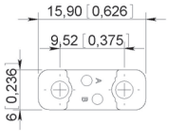

03

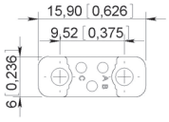

05

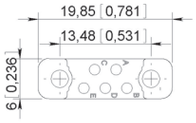

07

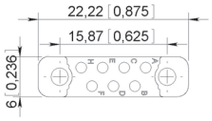

11

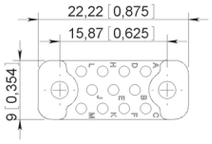

14

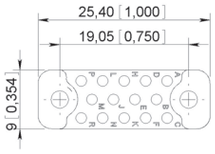

20

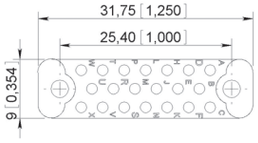

26

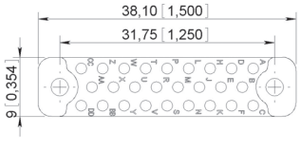

34

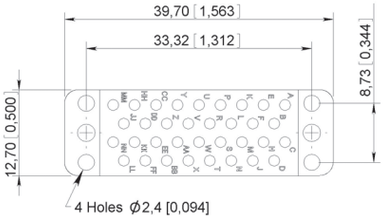

42

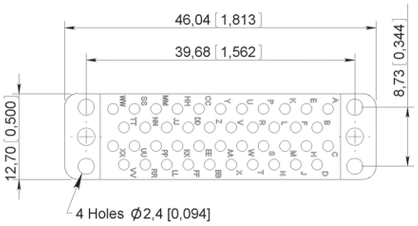

50

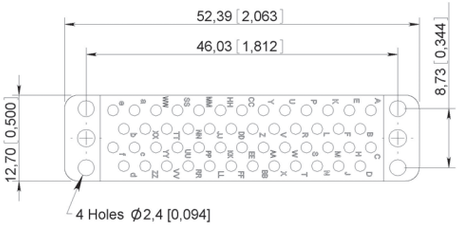

75

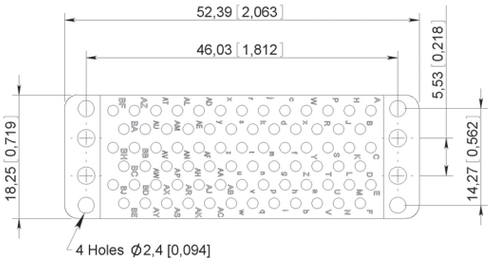

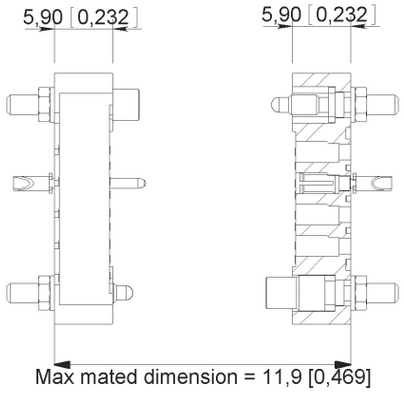

MATING DIMENSIONS

MB Series

TERMINATION STYLES

All contacts arrangement and termination style have contacts stopped in rotation (except contact arrangements 42, 50 and 75 for these please contact us).

TYPE 85

Solder pot

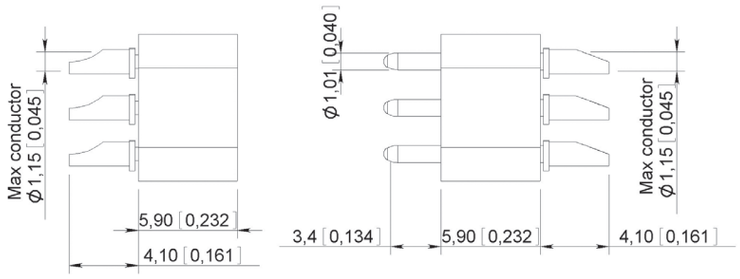

TYPE 86 [1]

Straight solder pin for PCB

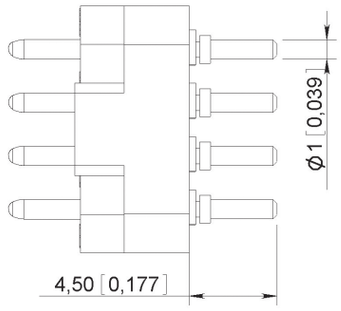

TYPE 87

Right angle solder pin for PCB

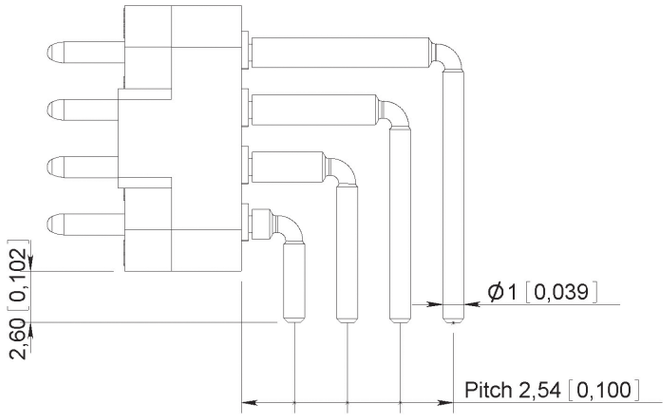

Notes

Dimensions mm (inch)

1. The connectors are supplied with insulating washers wich act as spacers between the insulator and the PCB

MB Series

PANEL CUT-OUT

DIMENSIONS mm (inch)												
	02	03	05	07	11	14	20	26	34	42	50	75
A	9.52 (0.375)	9.52 (0.375)	13.48 (0.531)	15.87 (0.625)	15.87 (0.625)	19.05 (0.750)	25.4 (1)	31.75 (1.250)	33.34 (1.313)	39.68 (1.562)	46.03 (1.812)	46.03 (1.812)
B	6 (0.236)	6 (0.236)	6 (0.236)	6 (0.236)	9 (0.354)	9 (0.354)	9 (0.354)	9 (0.354)	12.5 (0.500)	12.5 (0.500)	12.5 (0.500)	18.28 (0.720)
C	7.2 (0.283)	7.2 (0.283)	11 (0.433)	13.5 (0.531)	13.5 (0.531)	17 (0.669)	23.5 (0.925)	29.5 (1.161)	29.46 (1.160)	35.81 (1.410)	42.16 (1.660)	42.16 (1.660)
D	-	-	-	-	-	-	-	-	8.73 (0.344)	8.73 (0.344)	8.73 (0.344)	14.27 (0.562)
ØE (ISO)	2.2 (0.087)	2.2 (0.087)	2.2 (0.087)	2.2 (0.087)	2.2 (0.087)	2.2 (0.087)	2.2 (0.087)	2.2 (0.087)	2.2 (0.087)	2.2 (0.087)	2.2 (0.087)	2.2 (0.087)
ØE (NC)	2.4 (0.094)	2.4 (0.094)	2.4 (0.094)	2.4 (0.094)	2.4 (0.094)	2.4 (0.094)	2.4 (0.094)	2.4 (0.094)	2.4 (0.094)	2.4 (0.094)	2.4 (0.094)	2.4 (0.094)

CONTACT ARRANGEMENTS 02 - 03 - 05 - 07 - 11 - 14 - 20 - 26

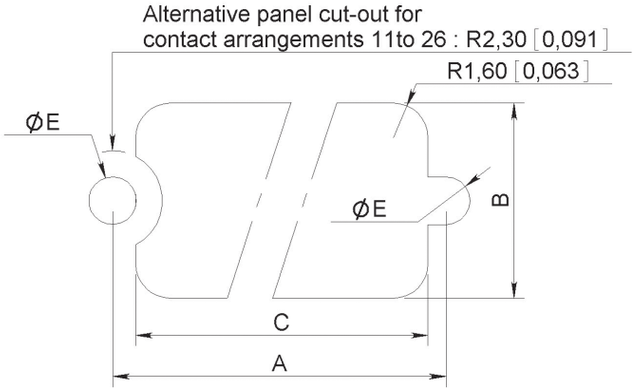

CONTACT ARRANGEMENTS 34 - 42 - 50

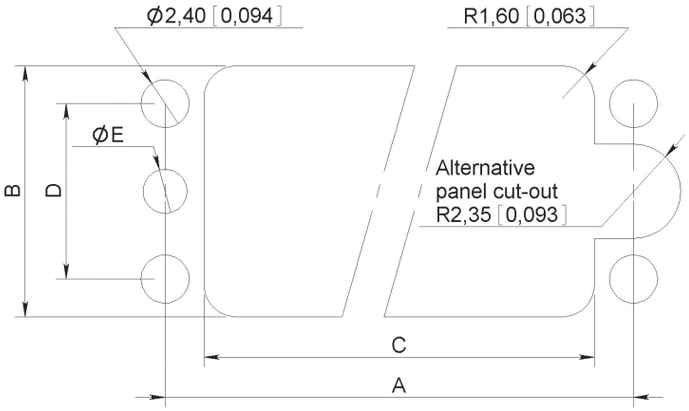

CONTACT ARRANGEMENT 75

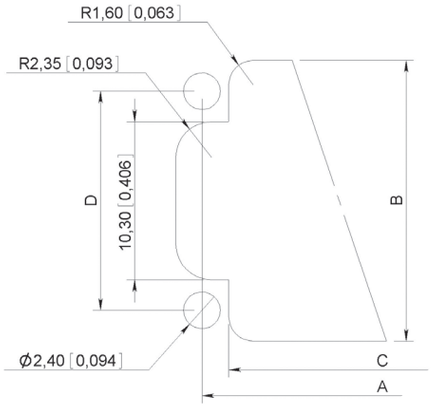

Notes

Dimensions mm (inch)

MB Series

PRINTED CIRCUIT DRILL PATTERN

TYPE 86 TERMINATION STYLE - Connector with SOCKET contacts – PCB component side view in mm (inch)

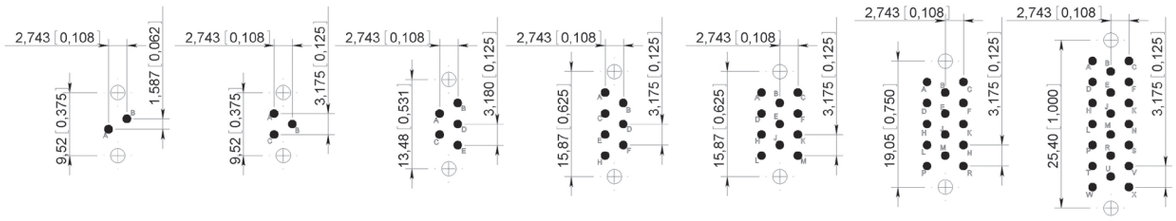

02 03 05 07 11 14 20

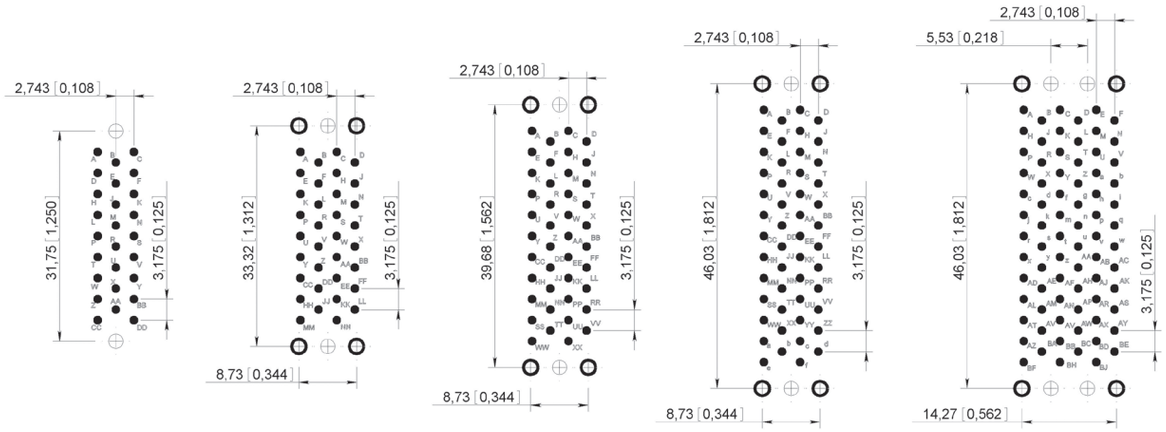

26 34 42 50 75

Notes:

- ● *Printed circuit drilling Ø 1.1 +0.1 (0.043 +0.003)*
- ○ *Drilling to fix the connector Ø 2.4 (0.094)*
- ⊕ *Drilling to fix the connector. Required for guides G1 and GV fixing only:*
  2.2 (0.087) Ø for ISO guides
  2.4 (0.094) Ø for UNC guides

MB Series

TYPE 86 TERMINATION STYLE - Connector with PIN contacts – PCB component side view in mm (inch)

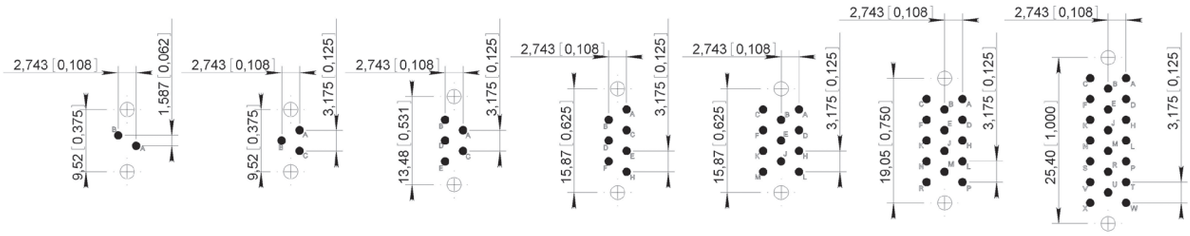

02 03 05 07 11 14 20

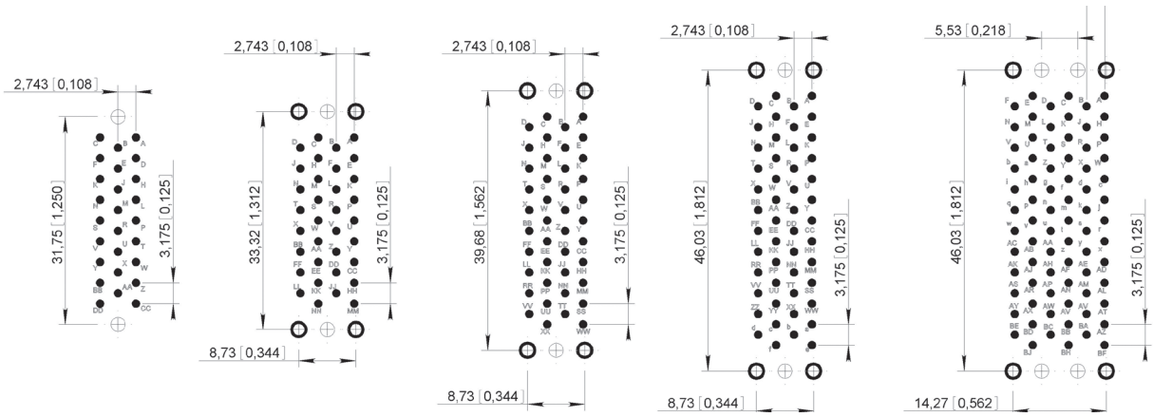

26 34 42 50 75

Notes:

- ● *Printed circuit drilling Ø 1.1 +0.1 (0.043 +0.003)*
- ○ *Drilling to fix the connector Ø 2.4 (0.094)*
- ⊕ *Drilling to fix the connector. Required for guides G1 and GV fixing only:*
  2.2 (0.087) Ø for ISO guides
  2.4 (0.094) Ø for UNC guides

MB Series

TYPE 87 TERMINATION STYLE - Connector with SOCKET contacts – PCB component side view in mm (inch)

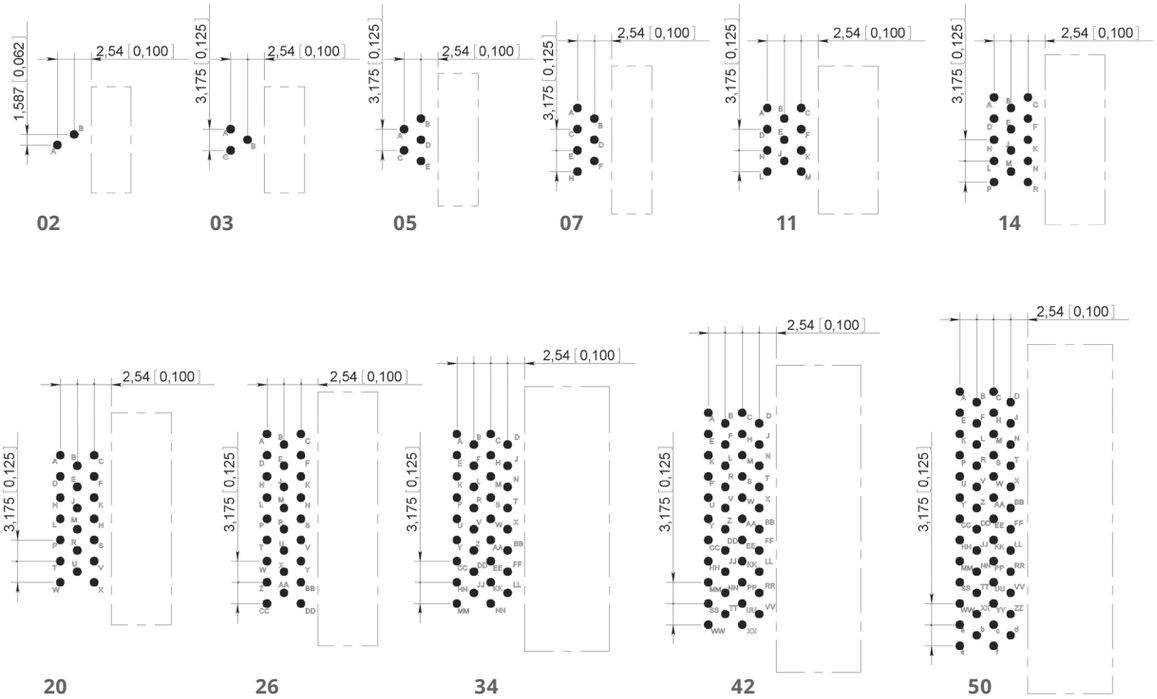

Notes:

- *Printed circuit drilling Ø 1.1 +0.1 (0.043 +0.003)*

MB Series

TYPE 87 TERMINATION STYLE - Connector with PIN contacts – PCB component side view in mm (inch)

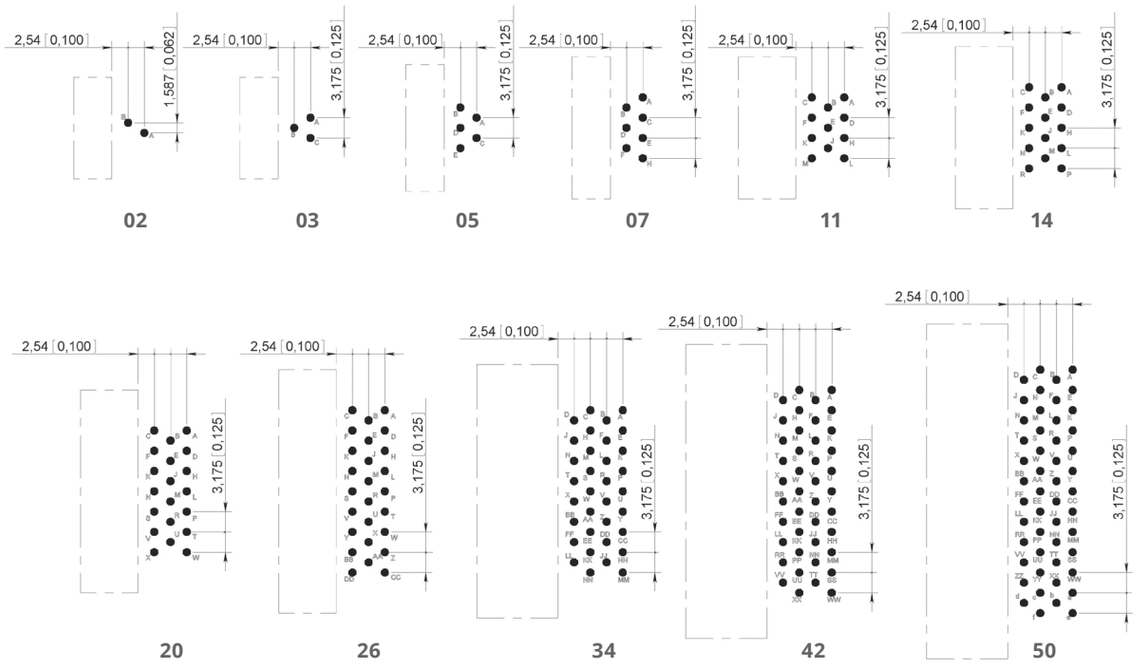

Notes:

• Printed circuit drilling Ø 1.1 +0.1 (0.043 +0.003)

MB Series

GUIDES & JACKSCREWS

Stainless steel guides and jackscrews are supplied with either ISO (M2 x 0.4) or UNC (2-56 UNC) threads. The guides or jackscrews types G1 – GV – VL and VR and type of thread (ISO or UNC) required are to be defined in the part number on page 10-17.

The standard configuration of guides and jackscrews is:

- Male guide (or jackscrew) at the end nearest contact A of the female connector.
- Female guide (or jackscrew) at the end nearest contact A of the male connector.

RACK GUIDES TYPE G1

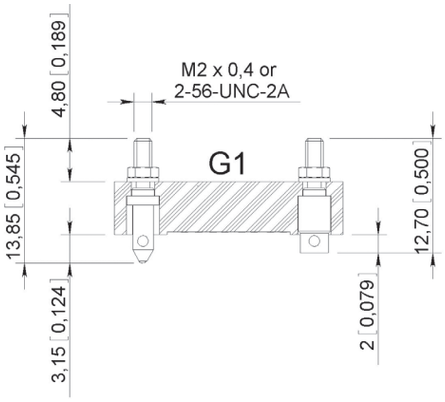

FIXED JACKSCREWS TYPE GV

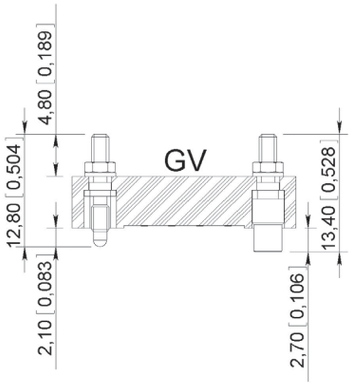

The 2,3, 5 and 7 way GV jackscrews are held securely in place by two flats on the jackscrews whereas the jackscrews for the other contact arrangements have a square section to avoid rotation.

These guide and jackscrews can be used with backshells HA and HL

LONG AND SHORT ROTATING JACKSCREWS TYPE VL – VR

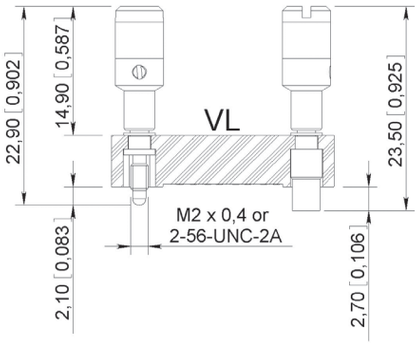

Mating torque: 0.2 Nm
Not available for termination style type 87
Cannot be used with backshell

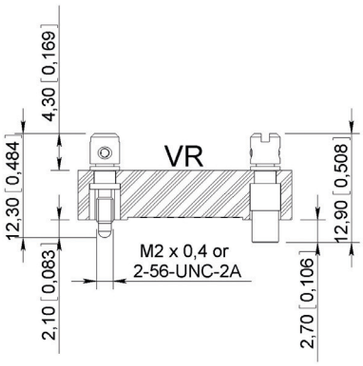

Mating torque: 0.2 Nm
Cannot be used with backshell

MB Series

CONNECTOR MATING COMPATIBILITY

TERMINATION STYLE TYPE 85 ONLY – Use with backshell

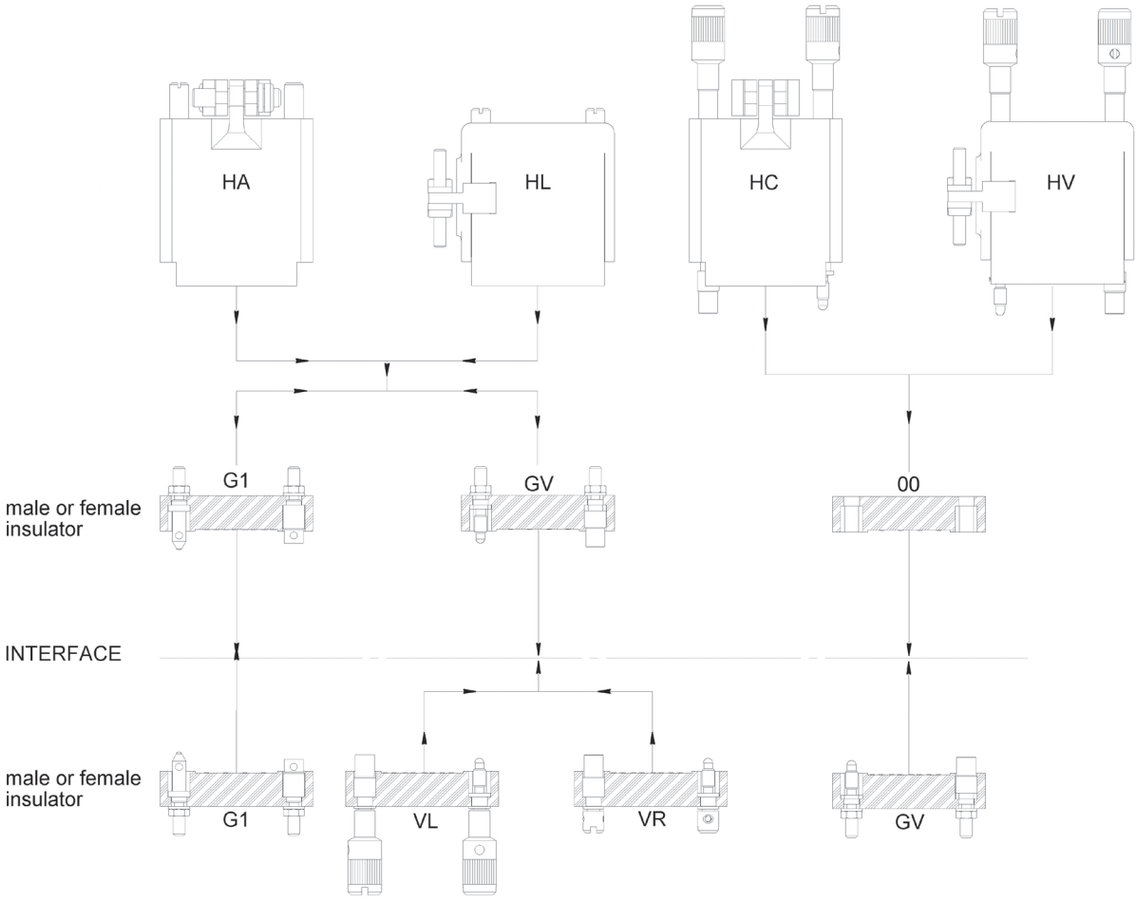

Use without backshell – All termination style type

MB Series

BACKSHELL TYPE AVAILABILITY

THREAD		BACKSHELL		THREAD	
NC (2-56 UNC)	ISO (M2 x 0.4)			ISO (M2 x 0.4)	NC (2-56 UNC)
07	07	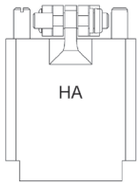	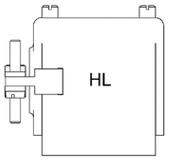	-	-
11	11			11	11
14	14			14	14
20	20			-	-
26	26			26	26
34	34			34	34
50	50			50	50
75	75			-	75 (1)
07	07	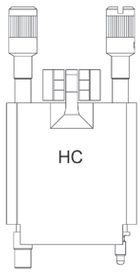	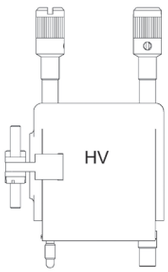	-	-
11	11			11	11
14	14			14	14
20	20			-	-
26	26			26	26
34	34			34	34
50	50			50	50
75	75			-	75 [1]

Fixing of backshells only suitable for insulator with termination style type 85 (solder pot)

Notes

1. Available for male contact arrangement only

MB Series

TOP ENTRY BACKSHELLS

TYPE HA

Backshells supplied with two internal threaded posts which are screwed into the guides G1 or jackscrews GV.

TYPE HC

Backshells supplied with two long rotating jackscrews. These backshells are mounted on connectors without guides or jackscrews.

PART NUMBERS

CONTACTS ARRANGEMENTS	TYPE HA		TYPE HC	
	WITH THREADS M2 X 0.4	WITH THREADS 2-56 UNC	WITH SCREWS M2 X 0.4	WITH SCREWS 2-56 UNC
07	MB07HAIS2	MB07HANC	MB07HCIS	MB07HCNC
11	MB11HAIS2	MB11HANC	MB11HCIS	MB11HCNC
14	MB14HAIS2	MB14HANC	MB14HCIS	MB14HCNC
20	MB20HAIS2	MB20HANC	MB20HCIS	MB20HCNC
26	MB26HAIS2	MB26HANC	MB26HCIS	MB26HCNC
34	MB34HAIS2	MB34HANC	MB34HCIS	MB34HCNC
50	MB50HAIS2	MB50HANC	MB50HCIS	MB50HCNC
75	MB75HAIS2	MB75HANC	MB75HCIS	MB75HCNC

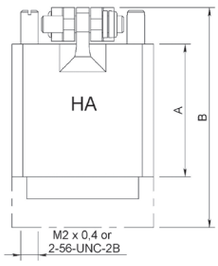

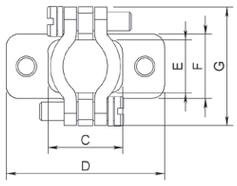

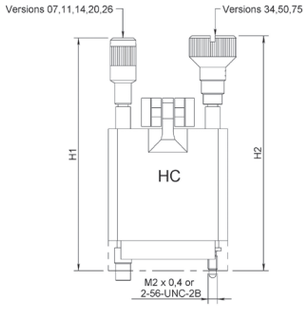

MATING TORQUE: 0.15 Nm

CONTACTS ARRANGEMENTS [1]	A	B	C	D	E	F	G	H1	H2 [2]
07	9.52 (0.375)	22.9 (0.902)	9.13 (0.359)	22.2 (0.874)	5.95 (0.234)	7.5 (0.295)	13.5 (0.531)	30.62 (1.205)	N/A
11	23.8 (0.937)	37.2 (1.465)	11.9 (0.468)		8.7 (0.342)	10.3 (0.405)	15.87 (0.625)	48.8 (1.921)	N/A
14			12.7 (0.500)	25.4 (1)					N/A
20	30.16 (1.187)	48.4 (1.905)	18.26 (0.719)	31.7 (1.248)			23.8 (0.937)	55.2 (2.173)	N/A
26			23 (0.905)	38.1 (1.500)					N/A
34			20.6 (0.811)	39.7 (1.563)	12.7 (0.500)	14.3 (0.563)	26.98 (1.062)	N/A	55.6 (2.189)
50			22.2 (0.874)	52.4 (2.063)				N/A	
75			23 (0.905)		18.2 (0.716)	19.8 (0.779)	34.52 (1.359)	N/A	

Notes

Dimensions mm (inch)

1. Fixing of backshells only suitable for insulator with termination style type 85 (solder pot)

2. Backshells 34, 50 and 75 are fitted with 4 screws to be fixed to the connector block

MB Series

SIDE ENTRY BACKSHELLS

TYPE HA

Backshells supplied with two internal threaded posts which are screwed into the guides G1 or jackscrews GV.

TYPE HC

Backshells supplied with two long rotating jackscrews. These backshells are mounted on connectors without guides or jackscrews.

PART NUMBERS

CONTACTS ARRANGEMENTS	TYPE HA		TYPE HC	
	WITH THREADS M2 X 0.4	WITH THREADS 2-56 UNC	WITH SCREWS M2 X 0.4	WITH SCREWS 2-56 UNC
11	MB11HLIS2	MB11HLNC	MB11HVIS	MB11HVNC
14	MB14HLIS2	MB14HLNC	MB14HVIS	MB14HVNC
26	MB26HLIS2	MB26HLNC	MB26HVIS	MB26HVNC
34	MB34HLIS2	MB34HLNC	MB34HVIS	MB34HVNC
50	MB50HLIS2	MB50HLNC	MB50HVIS	MB50HVNC
75	-	MB75HLNC [1]	-	MB75HVNC [1]

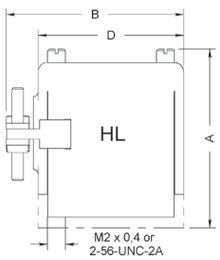

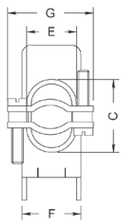

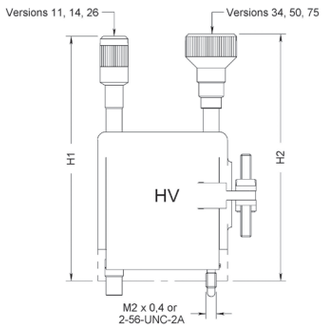

MATING TORQUE: 0.15 Nm

CONTACTS ARRANGEMENTS [2]	A	B	C	D	E	F	G	H1	H2 [3]
11	31.7 (1.248)	29.8 (1.173)	11.9 (0.469)	22.2 (0.874)	8.7 (0.343)	10.3 (0.406)	15.87 (0.625)	48.8 (1.921)	N/A
14		32.9 (1.295)	12.7 (0.500)	25.4 (1)					N/A
26	37.7 (1.484)	49.2 (1.937)	23 (0.906)	38.1 (1.500)	8.72 (0.343)		23.8 (0.937)		N/A
34		51.6 (2.031)	20.6 (0.811)	39.7 (1.563)	12.7 (0.500)	14.3 (0.563)	26.98 (1.062)	N/A	49.2 (1.937)
50		64.3 (2.531)	22.2 (0.874)	52.4 (2.063)				N/A	
75		65.5 (2.579)	23 (0.906)	52.4 (2.063)	18.2 (0.717)	19.8 (0.780)	34.52 (1.359)	N/A	

Notes

Dimensions mm (inch)

1. Available for male contact arrangement only

2. Fixing of backshells only suitable for insulator with termination style type 85 (solder pot)

3. Backshells 34, 50 and 75 are fitted with 4 screws to be fixed to the connector block

MB Series

ACCESSORIES

SPRING LOCKING SYSTEM

This simple locking system avoids accidental disconnection of connectors fitted to equipment which may be subjected to severe vibration. This system can be used where connector fitted with G1 guides are used with or without backshell.

Part number of a pair: 624895

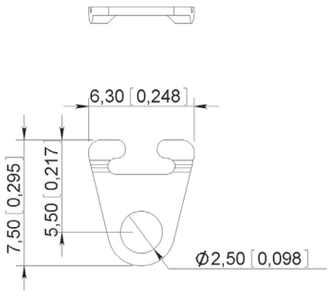

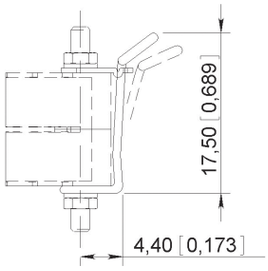

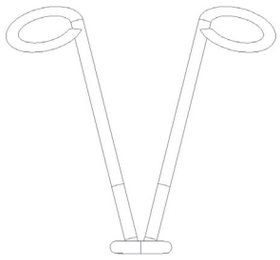

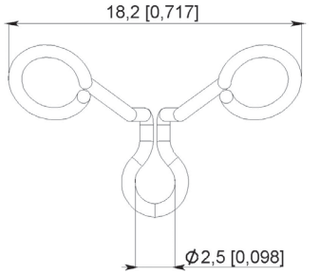

POTTING MOULDS

The plastic potting moulds are designed to fit onto the wiring side of the connectors in order so that the wiring and back end can be encapsulated. They can be used with connectors fitted with G1 guides and GV and VR jackscrews.

CONTACTS ARRANGEMENTS	PART NUMBERS	TYPE HA	
		A	B
02 -03	624994	5.9 (0.232)	9.5 (0.374)
05	624992	5.9 (0.232)	13.5 (0.531)
07	624991	5.9 (0.232)	15.9 (0.626)
11	624993	9 (0.354)	15.9 (0.626)
14	624995	9 (0.354)	19 (0.748)

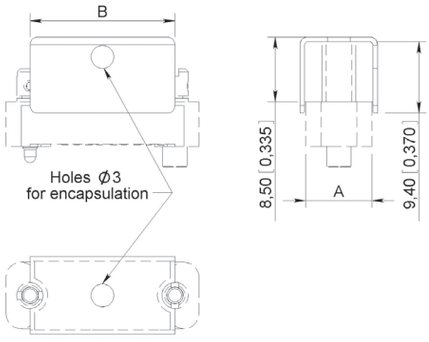

RTX SERIES

EN3716

Section 11 Table of Contents

RTX SERIES

Introduction 11-2
Applications 11-2
Product Overview 11-3
Technical Characteristics ..... 11-4 to 11-5
How To Order RTX Connectors 11-6
Dimensions & Panel Cut-Out ..... 11-7 to 11-8

RTX TERMINATIONS SERIES

How To Order RTX Terminations 11-9
Technical Characteristics 11-9
Dimensions RTX Terminations 11-10
Twinax Contacts ..... 11-11 to 11-12
Tools 11-13

INTRODUCTION

The digital data bus defined by MIL-STD-1553B is commonly considered as a worldwide standard regarding digital avionics equipment such as navigation by radar, communications, weapon control systems, etc.

All these systems linked together exchange data through a network of “shielded twisted pairs,” transformer couplers and twinax connectors.

Radiall offers the RTX range of twinax connectors, contacts and terminations suitable for use on this digital data bus.

In addition, Radiall can supply twinax contacts for installation into multipin connectors to connect equipment to the data bus.

NSX Arinc 600
EPX EN4644
MPX MIL DTL-83527B / EN3682
DSX SAE AS81659 / Arinc 404
MIL-DTL-38999

APPLICATIONS

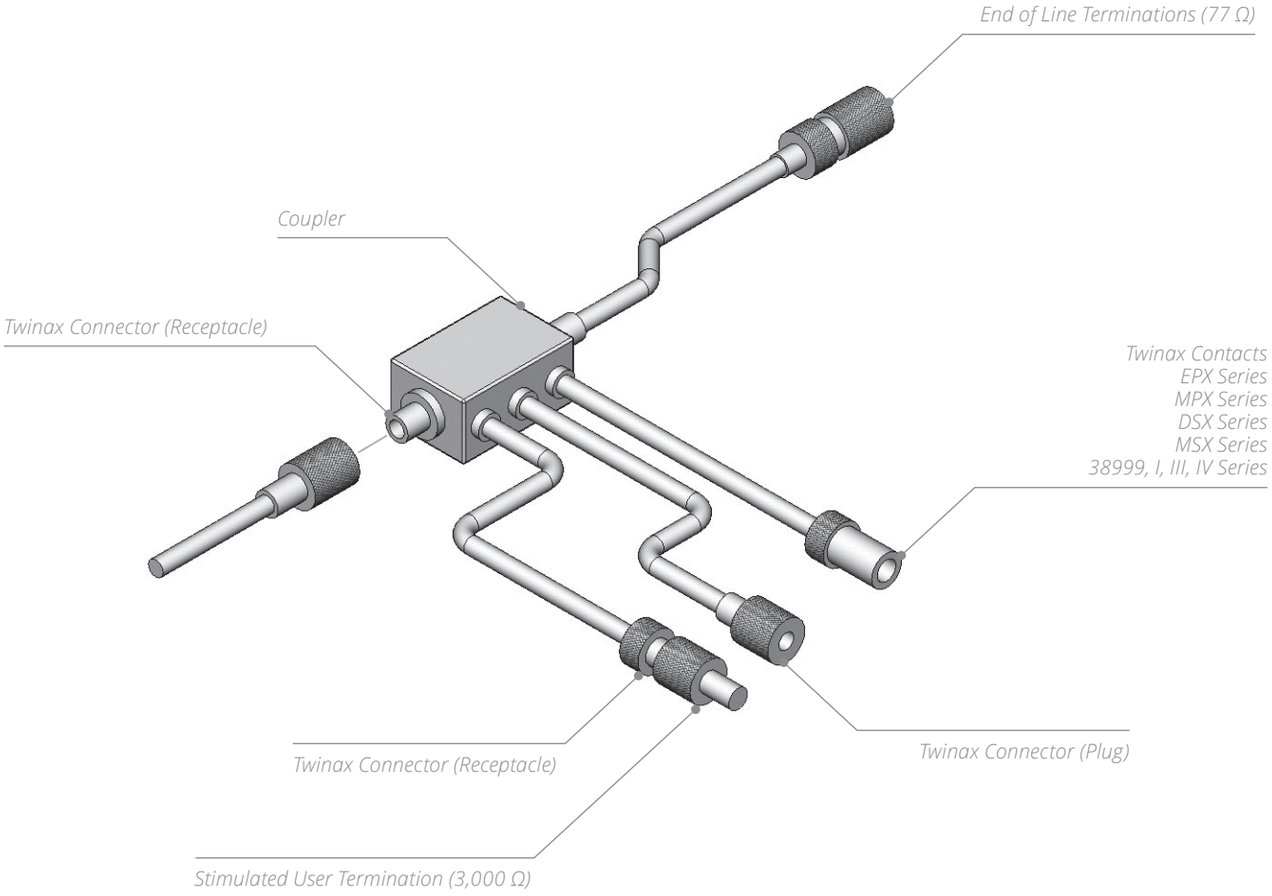

PRODUCT OVERVIEW

Detailed view of the various parts of the RTX series connector.

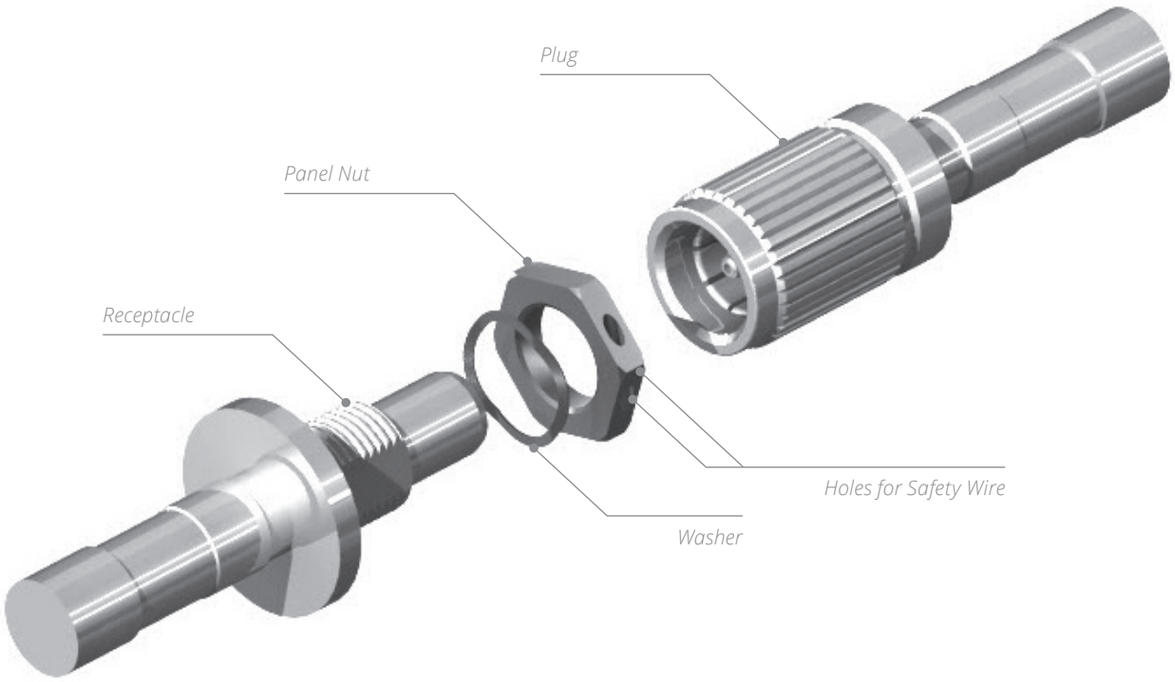

RTX Series

TECHNICAL CHARACTERISTICS

ELECTRICAL

- **Frequency Range:** 5 MHz max
- **Insulation Resistance:** at 25 °C (77 °F) ≥ 5000 MΩ
  at 150 °C (302 °F) ≥ 1,000 MΩ
- **DWV (Sea Level):** 900 Vac RMS – 50 Hz
- **DWV (70,000 ft):** 200 Vac RMS – 50 Hz
- **Contact Resistance:**
  - **Center & Intermediate Contacts:** ≤35 mΩ
  - **Outer Body:** ≤8 mΩ

MECHANICAL & ENVIRONMENTAL

- **Temperature Range:** -65 °C (-149 °F) to +150 °C (+302 °F)
- **Temperature Life:** 1,000 Hours at 150 °C (+302 °F)
- **Salt Spray:** 500 Hours
- **Altitude Immersion:** 47 kPa (0.68 psi)
- **Air Leakage:** 0.5 cm3/s
- **Sand & Dust:** 1 Cycle – Wind Speed 3.5±0.5m/s
- **Humidity:** 28 Days
- **Shock:** 100g – 6 ms
- **Vibration:** AECMA EN2591 Test D3 – Method B
- **Mating & Unmating:** 500 Cycles
- **Contact Retention:** > 45 N
- **Locking Torque (C)**
  - **Mating:** 1 ≤ C ≤ 1.25 Nm (8.85 ≤ C ≤ 11 lb in.)
  - **Unmating:** C ≤ 1.35 Nm (11.95 lb in.)
- **RoHs statue:** Not RoHs

RTX Series

MATERIALS

DESCRIPTION	MATERIAL/FINISH
Coupling Ring	Tin-Lead Plated Brass
Plug Outer Body	Copper Alloy Tin-Lead Plated
Receptacle Outer Body	Tin-Lead Plated Brass
Center Contact & Crimp Pot	Copper Alloy Gold over Nickel
Ferrule	Nickel-Plated Brass
Insulator & Sheath	PTFE

WEIGHT

DESCRIPTION	WEIGHT G (OZ)
Plug	12 (0.423)
Receptacle	9 (0.317)

RTX Series

HOW TO ORDER RTX CONNECTORS

The RTX series consists of plugs, receptacles (crimp version) and terminations.

The plug has a knurled and threaded coupling ring which provides mating and locking. The jam nut style receptacle is provided with an o-ring for sealing to the bulkhead.

RTX

SERIES PREFIX

CONNECTOR TYPE
003: Receptacle
004: Plug

INTERMEDIATE CONTACT TYPE
F: Socket
M: Pin

CABLE TYPE [1]
01: Twisted pair single braid
02: Twisted pair double braid

Notes
1. A version for triaxial cable is also available, please consult Radiall.

RTX Series

DIMENSIONS & PANEL CUT-OUT

RECEPTACLE – PIN MM (INCH)

RTX003M –

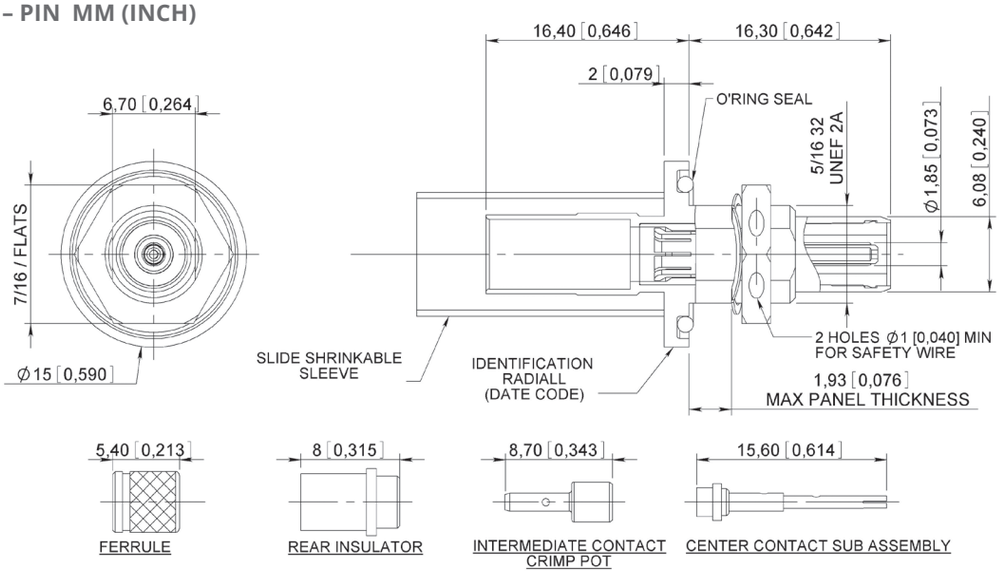

PANEL CUT OUT

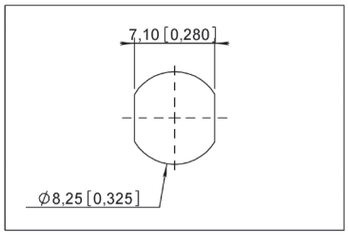

RECEPTACLE – SOCKET MM (INCH)

RTX003F –

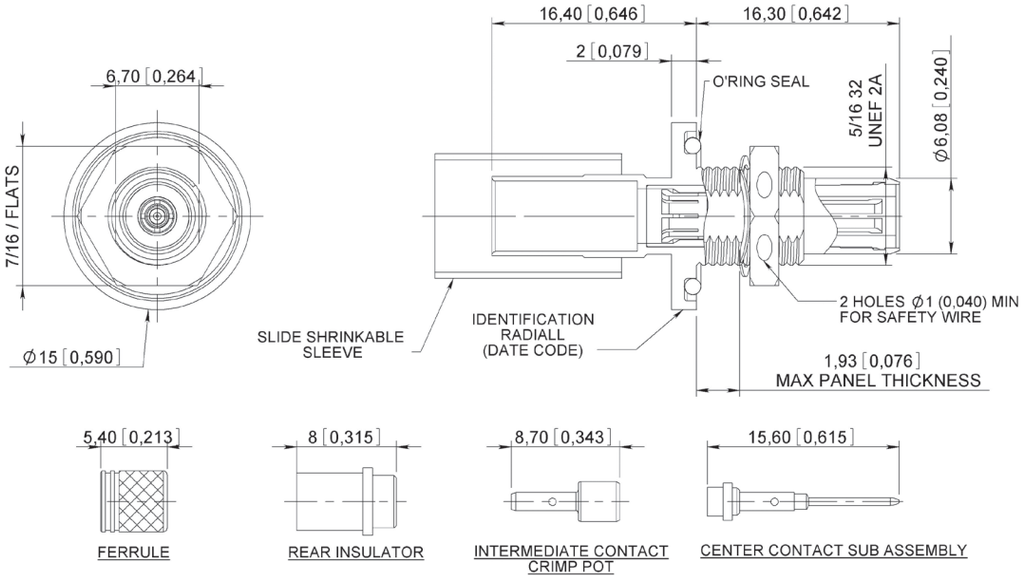

RTX Series

DIMENSIONS

PLUG – PIN MM (INCH)

RTX004M –

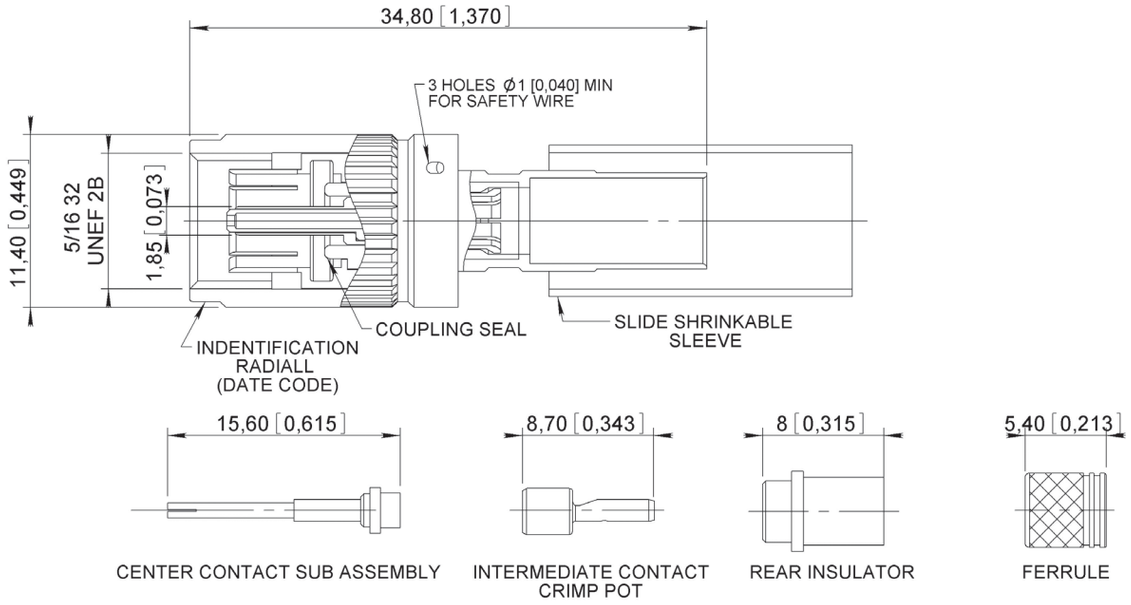

PLUG – SOCKET MM (INCH)

RTX004F –

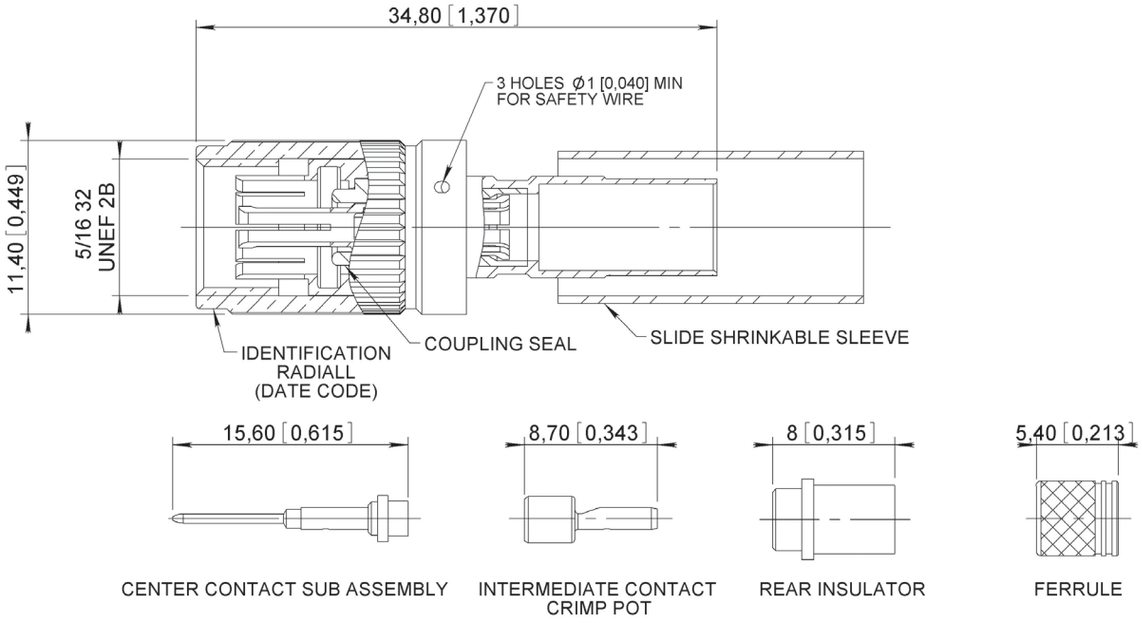

RTX Termination Series

HOW TO ORDER RTX TERMINATIONS

RTX series terminations are used to simulate a bus user or as end of line load.

RTX

SERIES PREFIX

CONNECTOR TYPE
003: Receptacle
004: Plug

INTERMEDIATE CONTACT TYPE
F: Socket
M: Pin

TERMINATION VALUE [1]
770: End of line terminations (77 Ω)
302: Simulated user terminations (3,000 Ω)

TECHNICAL CHARACTERISTICS

RTX series terminations have the same technical characteristics as the RTX plug and receptacle except the following:

- **Termination Values:** 77 ± 5 Ω or 3,000 ± 60 Ω
- **DWV:** 700 Vac RMS – 60Hz
- **Working Voltage:** 120 Vac RMS – 60 Hz

Notes

1. Write the two first significant digits of the resistance value plus 1 digit giving the number of zeros of the resistance value (i.e. 5500 will be written 552)

RTX Termination Series

DIMENSIONS RTX TERMINATIONS

RECEPTACLE TERMINATION MM(INCH)

RTX003 –

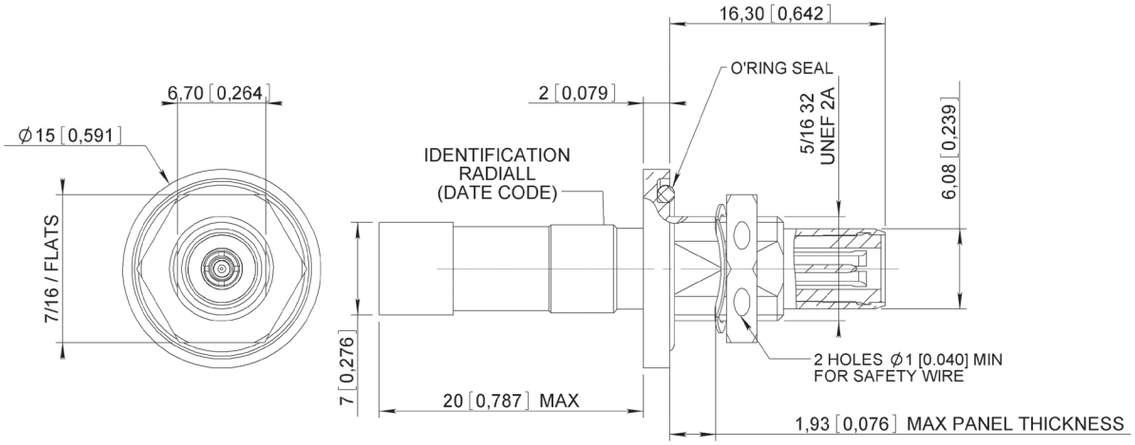

PANEL CUT OUT

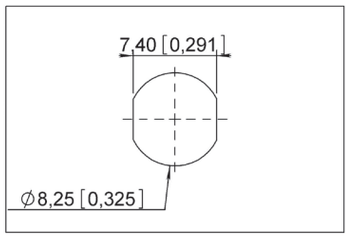

PLUG TERMINATION MM(INCH)

RTX004 –

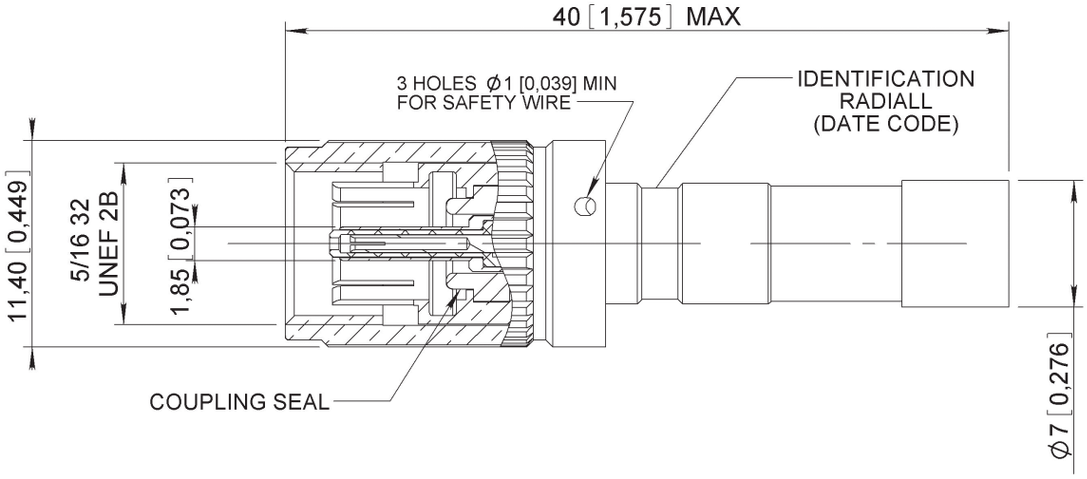

TWINAX CONTACTS

CRIMP TERMINATION

CONNECTOR SERIES	CONTACT				INSERTION/EXTRACTION TOOL
	SIZE	CABLE	TYPE	PART NUMBER	
MIL DTL 38999	8	MIL-C17/176000002 EN3375-003ST	Socket	670050 [1]	282549001 M81969/28-03
			Pin	670150 [1]	
		EN3375-004DT Or EN3375-005DT	Socket	670051 [1]	
			Pin	670151 [1]	
EPX EN 4644	5	MIL-C-17/17600002 or PAN 6421	Socket	617050	282946 M81969/28-01
			Pin	617150	
DSX ARINC 404 SAE AS81659	5	MIL-C-17/17600002	Socket	616095001 [3]	282946 M81969/28-01
			Pin	616195001 [3]	
			Socket	616095009 [2]	
			Pin	616195009 [2]	
		PAN 6421	Socket	616095005 [3]	
			Pin	616195005 [3]	
	9	MIL-C-17/17600002	Socket	616096003 [3]	
			Pin	616196003 [3]	
			Socket	616096004 [2]	
			Pin	616196004 [2]	
			Socket	616096006 [2]	
MPX MIL DLT 83527B	8	EN3375-004DT EN3375-005DT	Socket	618060 [1]	282549001 M81969/28-03
			Pin	618160 [1]	
		MIL-C-17/17600002 or EN3375-003ST	Socket	618061 [1]	
			Pin	618161 [1]	
ARINC	8	MIL-C-17/17600002 or EN3375-003ST	Socket	619070001 / 002 (Env)	282549001 M81969/28-03
			Pin	619170001/ 002 (Env)	
ARINC	8	PAN6421ZA002	Socket	619070011 / 012 (Env)	
			Pin	619170011/ 012 (Env)	
ARINC	8	EN3375-004 Raychem 10613 ASNE0479WJ	Socket	619070021 / 022 (Env)	
			Pin	619170021/ 022 (Env)	
ARINC	8	10614 Triple Shielded	Socket	619070031 / 032 (Env)	
			Pin	619170031/ 032 (Env)	

Notes

1. In order to have environmental versions add 001 to the part number except for 619x70xxx contacts.
2. These contacts are to be installed in environmental connectors only.
3. These contacts are to be installed in non environmental connectors only.

RTX Termination Series

PC TAIL TERMINATIONS

CONNECTOR SERIES	CONTACT				INSERTION/EXTRACTION TOOL
	PIN SIZE	PART NUMBER	CONTACT DRAWING	REAR EXTENSION FROM INSERT = X MM (INCH)	
DSX ARINC 404 SAE AS81659	5	616195003	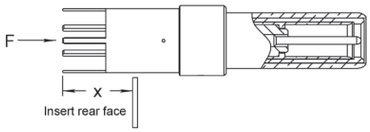	32C2, 32T2, 33C4, 33T4, 40C1, 40T1 = 3.2/4.0 (0.125/0.158) 36C7, 36T7 = 5.40/6.10 (0.212/0.240)	282946 M81969/28-01
		616195008	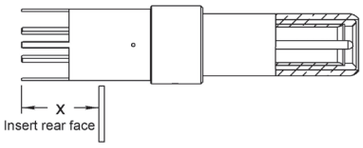		
	9	616196005	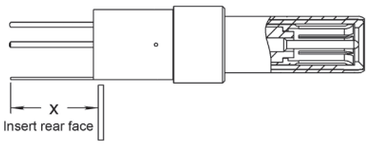	C8, T8 = 1.30/2.15 (0.050/0.085) 32C4, 32T4 = 6.45/7.30 (0.253/0.288)	
		616196007	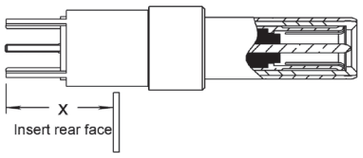	C8, T8 = 0 32C4, 32T4 = 3.70/4.35 (0.145/0.170)	
MPX MIL DLT 83527B	8	618163 [1]	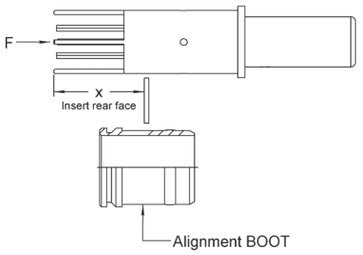	7.65 ± 0.5 (0.282/0.321)	282549001 M81969/28-03

Notes

1. For 62T2 contact arrangement, the rear extension from the insert is 0.303/0.343 (8.2 ± 0.5). This contact is delivered with an alignment boot.

TOOLS

INSERTION / EXTRACTION TOOL

282549001 - M81969/28-03

282946 - M81969/28-01

Notes

MIL-DTL SERIES

Section 12 Table of Contents

Introduction 12-2
Application 12-2
Product Overview 12-3
How To Order MIL-DTL-38999 Type Connectors 12-4
Inserts For LuxCis® Contacts 12-5
LuxCis® Fiber Optic Contacts 12-6
Quadrax & Coaxial Contacts 12-7
Shell Dimensions 12-8

MIL-DTX Series

INTRODUCTION

Radiall offers a wide range of MIL-DTL-38999 type connectors for applications in both military and civil aviation markets.

Whether your needs are for crimped coax or quadrax contacts, or for LuxCis® optical contacts, you will find products that suit your requirements.

Radiall proposes various sizes (from 11 to 25), types (plugs, wall-mount and jam-nut receptacles), and plating for 38999 type shells to withstand high performances:

- Aluminum Olive drab Cadmium (500 h salt spray)
- Nickel plated Aluminum (48h salt spray)
- Nickel plated Composite (2,000 h salt spray)
- Nickel Aluminum Bronze (500 h salt spray)

Radiall also provides an extensive range of inserts: nine optical arrangements including one that mixes electrical and optical contacts.

Apart from our LuxCis contacts range, you will also find Radiall's Quadrax & Coaxial contact offer, for environmental and non-environmental needs.

APPLICATION

Interconnect solution for aerospace and military harsh environment applications.

MIL-DTX Series

PRODUCT OVERVIEW

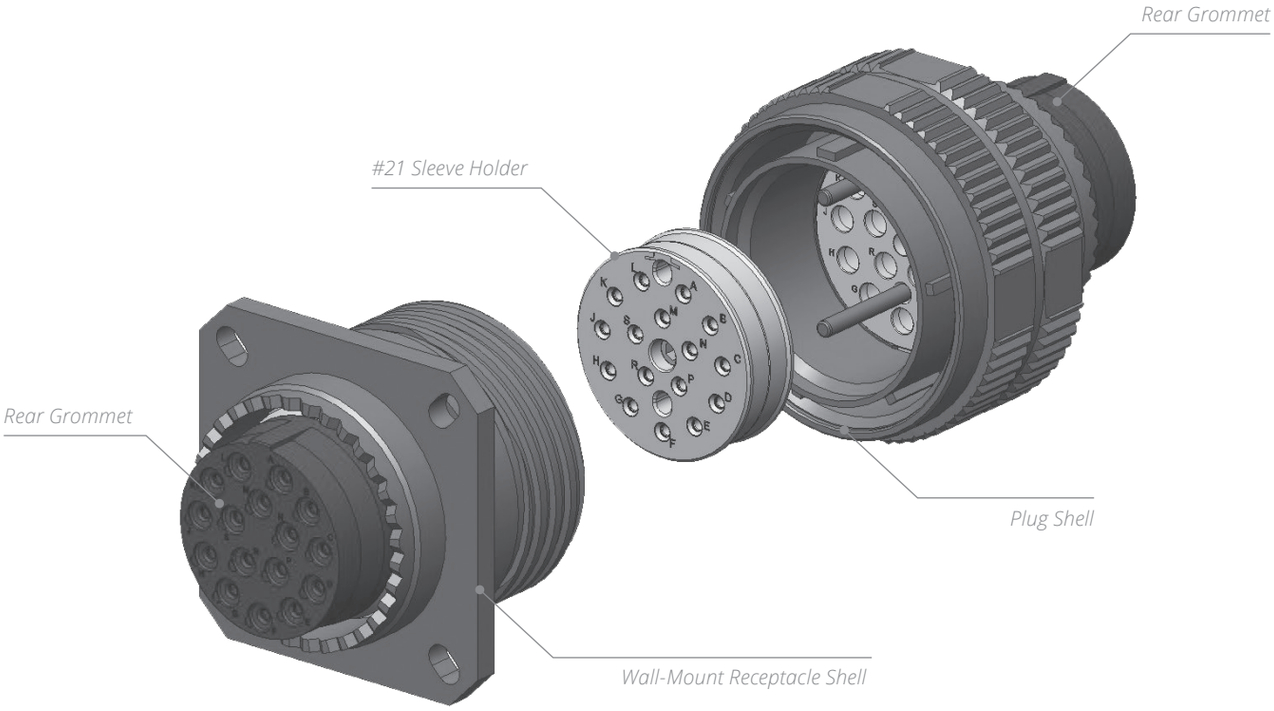

MIL-DTX Series

HOW TO ORDER MIL-DTL-38999 TYPE CONNECTORS

PART NUMBERS FOR LUXCIS® MIL-DTL-38999 TYPE CONNECTORS

R8

R8:
LuxCis® MIL-DTL-38999 series

SHELL TYPE:
W: Plug
R: Square flange receptacle
N: Jam nut receptacle

SHELL SIZE:
11-13-15-17-19-21-23-25

SHELL MATERIAL AND FINISH:
O: Aluminium olive drab cadmium
N: Nickel-plated Aluminium
M: Nickel-plated composite
G: Nickel aluminium bronze

CONTACT LAYOUT:
2FO: 2 LuxCis® contacts (shell size 11)
2FO2E: 2 LuxCis® + 2 electrical contacts (shell size 13)
4FO: 4 LuxCis® contacts (shell size 13)
6FO: 6 LuxCis® contacts (shell size 15)
8FO: 8 LuxCis® contacts (shell size 17)
12FO: 12 LuxCis® contacts (shell size 19)
16FO: 16 LuxCis® contacts (shell size 21)
24FO: 24 LuxCis® contacts (shell size 23)
32FO: 32 LuxCis® contacts (shell size 25)

INSERT TYPE:
S: Sealed insert for plug (R8W)
P: Sealed insert for receptacle (R8R or R8N)

INSERT MATERIAL:
A: Anodized aluminium
C: Non metalized composite

POLARIZATION:
N-A-B-C-D-E

Notes
Electrical contacts are to be ordered separately
Anodized aluminum inserts are recommended when specific EMI protection is required
All connectors are supplied with a plastic cap
Accessories such as backshell or metalized caps are only available for harness assemblies manufactured by Radiall.
Please contact your sales representative for other plating alternatives or for specific requirements

MIL-DTX Series

INSERTS FOR LUXCIS® CONTACTS

MIL-DTL-38999 TYPE CONNECTORS FOR LUXCIS® CONTACT

THE LUXCIS® PRODUCT RANGE ALSO INCLUDES MIL-DTL-38999 TYPE CONNECTORS

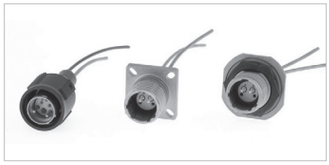

Size 11 MIL-DTL-38999 Type Connectors

Size 25 MIL-DTL-38999 Type Connectors

Removable Sleeveholder for Easy Access to the Ferrules and Sleeves for Inspection and Cleaning

SHELLS ARRANGEMENT

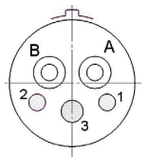

Size 11, 2 LuxCis®

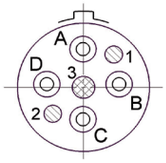

Size 13, 4 LuxCis®

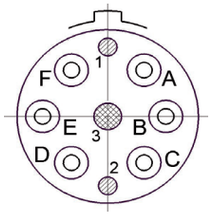

Size 15, 6 LuxCis®

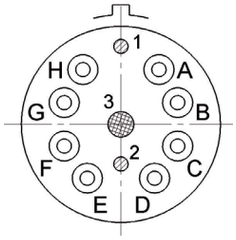

Size 17, 8 LuxCis®

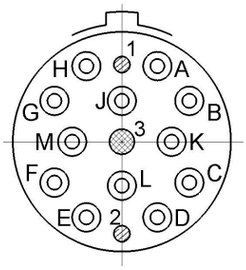

Size 19, 12 LuxCis®

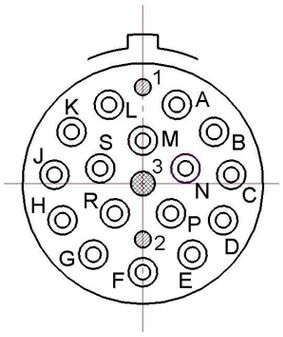

Size 21, 16 LuxCis®

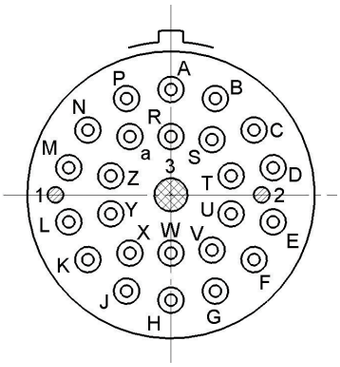

Size 23, 24 LuxCis®

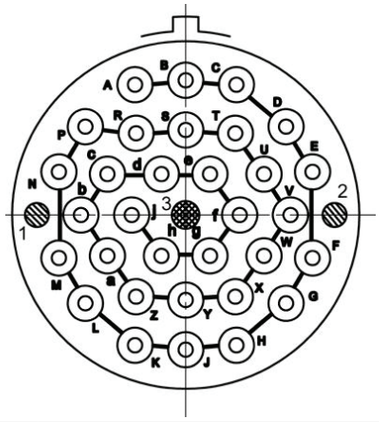

Size 25, 32 LuxCis®

1 & 2: Alignment pins 3: Sleeve-holder screw A, B: Optical cavities

All views show the front face of a plug.

The LuxCis® product range also includes hybrid connectors, mixing electrical and LuxCis® cavities.

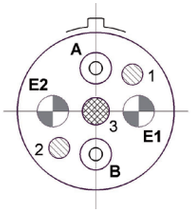

Size 13 connector with 2 electrical and 2 LuxCis® cavities
Hybrid connectors are available in all sizes; please see your local Radiall representative for more details.

LUXCIS® FIBER OPTIC CONTACTS

The LuxCis® product range is a proven, flexible and always expending fiber optic interconnect solution offering high speed communication in aerospace and other harsh environments.

OPTICAL PERFORMANCES

	MULTIMODE (PC) 850/1,300 NM	SINGLEMODE (UPC) 1,310/1,550 NM
INSERTION LOSS (IL) MEAN (IEC 61300-3-4 METHOD B)	0.1 dB	0.15 dB
RETURN LOSS (RL) (IEC 61300-3-6)	> 20 dB	> 50 dB

MECHANICAL AND ENVIRONMENTAL CHARACTERISTICS

	STANDARD	PERFORMANCES
THERMAL CYCLING	SAE AS 13441 Method 1003.1	-55 °C/+125 °C (Cable Dependant)
TEMPERATURE ENDURANCE	TIA/EIA 455-20	1,000 h @ 125 °C (Cable Dependant)
VIBRATION	TIA/EIA 455-11	43 Grms
SHOCKS	TIA/EIA 455-14	330 G, 3 ms
DURABILITY	TIA / EIA 364-09	500 Cycles
MAINTENANCE AGEING	SAE AS 13441 Method 2002.1	10 Cycles
CABLE RETENTION 1.8 MM DIAMETER 900 MM DIAMETER	SAE AS 13441 Method 2009.1	68 N 7 N
HUMIDITY	TIA EIA 455-5	10 Cycles / 24 h 90% RH -25 °C / +65 °C

LUXCIS® CONTACT PART NUMBERING SYSTEM

F725 _ _ _

F725:
LuxCis® series

FERRULE TYPE
00: PC ferrule for SingleMode fiber
03: PC ferrule for 50/125 or 62.5/125 um MultiMode fiber
04: PC ferrule for 100/40 um MultiMode fiber
05: PC ferrule for 200/230 um MultiMode fiber
50: APC ferrule for SingleMode fiber

CABLE TYPE AND DIAMETER
118: 900 µm cable
318: 1.2 mm cable with strengthening members, tight structure
419: 1.6 to 2.2 mm cable, loose structure
519: 1.6 to 2.2 mm cable, tight structure

Notes
Radiall can support you with your cable and harness assemblies.
Please contact your sales representative

QUADRAX & COAXIAL CONTACTS

SIZE 8 QUADRAX & COAXIAL CONTACTS

TYPE			SOCKET CONTACT	PIN CONTACT	CABLE
Size 8	Quadrax	Environmental	670075023	670175023	Draka F 4703-2
	Quadrax		670175012	670175012	Tensolite NF 24 Q 100
	Quadrax	Non-Environmental	670075028	-	Tensolite NF 24 Q 100
	Coax		670001007	670101007	EN3645 EN4165

SHELL DIMENSIONS

SQUARE FLANGE AND JAM NUT RECEPTACLES

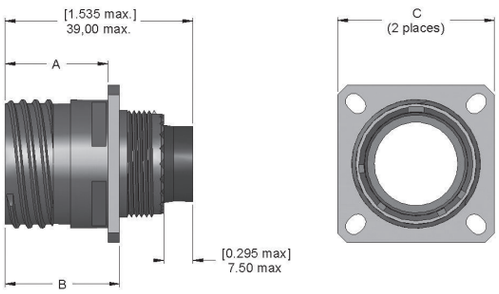

FIG. 1 SQUARE FLANGE RECEPTACLES

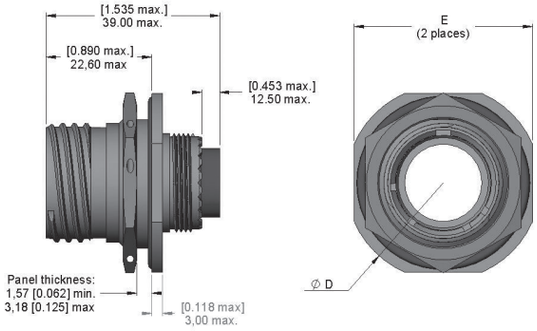

FIG. 2 JAM NUT RECEPTACLES

SHELL SIZE	FIGURE 1					FIGURE 2	
	A MAX. MM (INCH)		B MAX. MM (INCH)		C MAX. MM (INCH)	DIA. D MAX.	E MAX.
	METALLIC SHELL	COMPOSITE SHELL	METALLIC SHELL	COMPOSITE SHELL		MM (INCH)	MM (INCH)
11	20.83 (0.820)	19.69 (0.775)	23.15 (0.911)	23.19 (0.913)	26.50 (1.043)	35.20 (1.386)	32.20 (1.268)
13					28.90 (1.137)	38.40 (1.512)	35.30 (1.390)
15					31.30 (1.232)	41.60 (1.638)	38.50 (1.516)
17					33.70 (1.323)	44.80 (1.764)	41.70 (1.642)
19					36.90 (1.449)	49.50 (1.949)	46.40 (1.827)
21	20.07 (0.790)	18.92 (0.745)		23.14 (0.911)	40.10 (1.575)	52.70 (2.075)	49.60 (1.953)
23					43.30 (1.701)	55.90 (2.200)	52.80 (2.079)
25					46.40 (1.823)	59.00 (2.323)	56.00 (2.205)

PLUGS

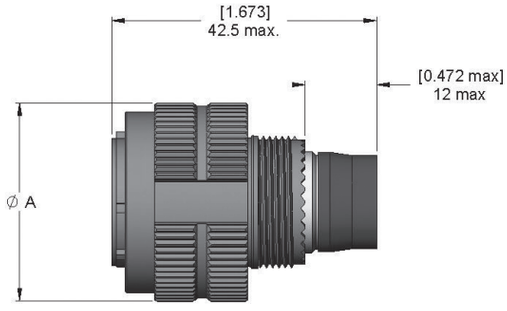

SHELL SIZE	DIA. A MAX. MM (INCH)
11	25.00 (0.984)
13	29.40 (1.157)
15	32.50 (1.280)
17	35.70 (1.405)
19	38.50 (1.516)
21	41.70 (1.642)
23	44.90 (1.768)
25	48.00 (1.890)

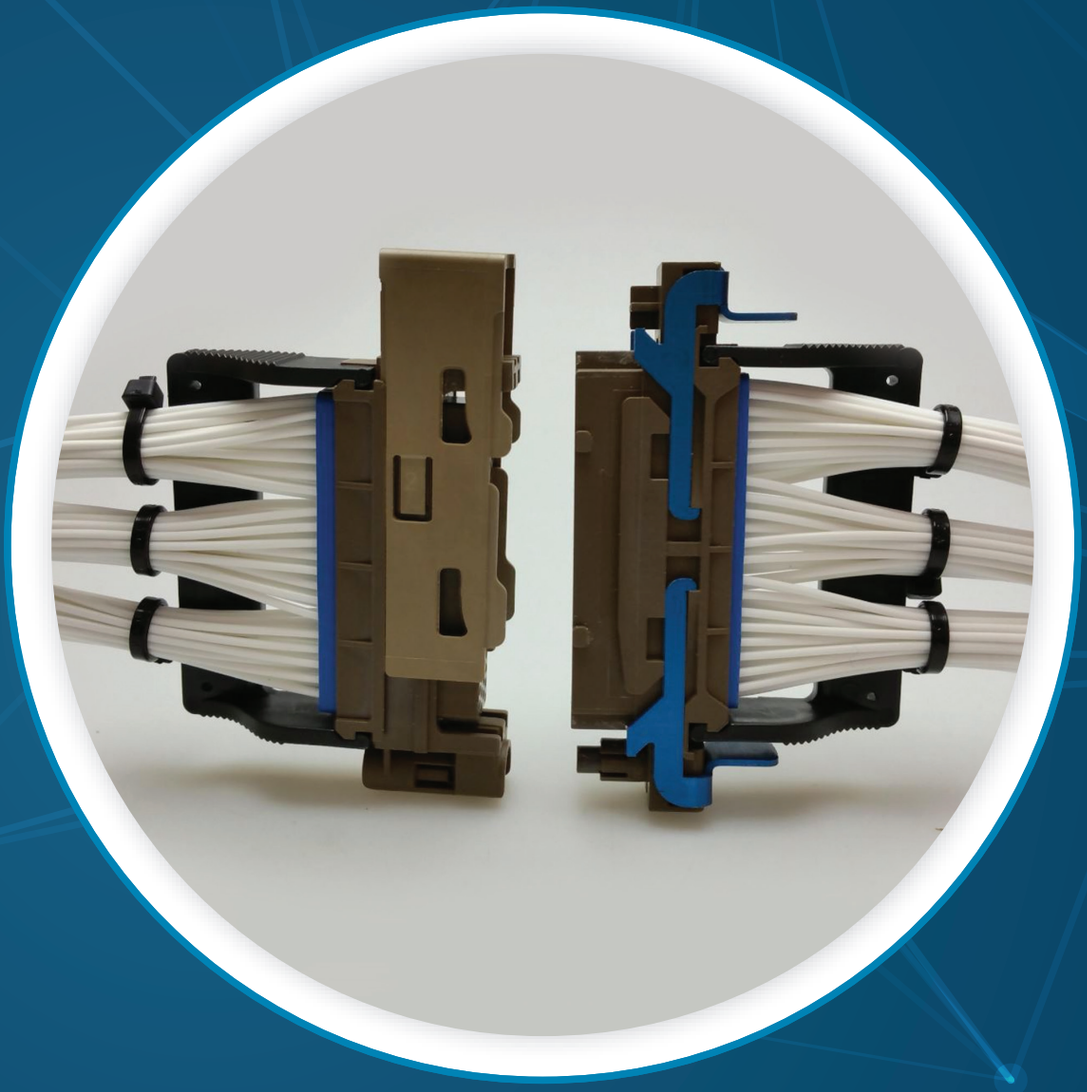

QUICK INSTALL (QR)

Section 13 Table of Contents

INTRODUCTION

Introduction 13-2
Applications 13-2
Features & Benefits 13-2
Electrical Characteristics ..... 13-2 to 13-3
Mechanical Characteristics 13-3
Environmental Characteristics 13-3

QR SERIES

QR Product Overview 13-4
How To Order QR Connectors 13-5
Polarization Code 13-6
QR Shell Dimensions ..... 13-7 to 13-8
QR Shell Weights 13-9
QR Arrangements 13-10

CONTACTS

Signal & Power Crimp Contacts 13-11
Coaxial Crimp Contacts 13-12
Twinax & Triax Crimp Contacts 13-12
Quadrax Crimp Contacts 13-12
Fiber Optic Contacts & Q-MTitan 13-13
Sealing Plugs 13-13

ACCESSORIES

Accessories, Spare Parts & Tools ..... 13-14 to 13-15

INTRODUCTION

The development of the Quick Install range (QR connector series) highlights Radiall's ability to innovate for customer needs and design a reliable and competitive industrial solution in record time.

Radiall's Quick Install is a lightweight solution that reduces harness integration and maintenance time. It can also replace EN3545 due to the same panel cutout. This new connector provides high performances, weight reduction and tool-less panel mounting and locking.

Utilizing Radiall's ability to design innovative solutions, this interconnect system was designed with two tool-less mechanisms that save up to 80% of installation time compared to the legacy screwed connector:

- A unique locking device system to ensure a quick, tool-less install on the panel
- A slide lock, which has already been mastered and qualified on other product ranges, to ensure instant manual mating of the harness connector. The slide technology features visual and audible indicators to guarantee that the installation and mating is locked.

APPLICATIONS

The innovative Quick Install has a positive impact on the total cost of ownership and provides customers with a proven and reliable high performance solution for cable-to-cable, optical and equipment versions onboard commercial aircraft.

FEATURES & BENEFITS

15% LIGHTER THAN THE COMPETITION

It features a unique design made of composite material with a slim form factor that provides 15% weight savings compared to the legacy screwed connector. With an average weight of 45 g per mated pair, the weight reduction represents up to 20 kg for a typical aircraft.

80% INSTALLATION TIME SAVINGS

- A unique locking device system to ensure a quick, tool-less installation on the panel
- A slide lock, which has already been mastered and qualified on other product ranges, to ensure instant manual mating of the harness connector

A TOOL-LESS AND FOD-PROOF DESIGN

The Quick Install provides customers with a proven and reliable high performance solution that can replace the cable-to-cable, optical and equipment versions of EN3545.

SELF INSPECTION AT MATING

The slide technology features visual and audible indicators guarantee that the installation and mating tools are locked.

ELECTRICAL CHARACTERISTICS

DIELECTRIC WITHSTANDING VOLTAGE: EN2591-207 WITH CURRENT LEAKAGE <2 mΩ

PRESSURE	CONTACT SIZES	CONNECTORS	
		MATED (VRMS)	UNMATED (VRMS)
Initial Measurement and After Damp Heat Steady State Test	22, 20, 16, 12 10, 08	-	1,300 (#22) 1,500
After Interfacial Sealing Test		1,300 (#22) 1,500	-
During Low Air Pressure Test (12,1 kPa)		-	600

Introduction

INSULATION RESISTANCE: EN2591-206

> 5,000 MΩ initial

> 1,000 MΩ after endurance at temperature, immersion at low air pressure, interfacial sealing and during fluid resistance test

ELECTRICAL STRESS TESTS

- Power supply voltage spikes ABD0100.1.8 and ED14/DO160 section 17, 2,000 V
- Lightning functional link ED14/DO160 section 22.5.1 « pin injection test » - 5 A – 1,500 V/1,500 A

MECHANICAL CHARACTERISTICS

VIBRATION & SHOCK

VIBRATION	SHOCK
4 h/axis 0.017 g^2/Hz from 7 to 50 Hz and 0.1 g^2/Hz from 50 to 2,000 Hz (129 m/s^2) Discontinuities < 1 µs Discontinuities < 2 ns for Quadrax Contacts EN2591-403 Method B Condition D	EN2591-042 Method A 50 g/Duration 11 ms Half Sine Method B 50 g/Duration 9 ms Saw Tooth

DURABILITY

COMPONENT	MATING/UNMATING	MATING FORCE
PANEL LOCKING	50 Cycles	30 N max
PLUG TO RECEPTACLE MATING AND UNMATING	100 Cycles	90 N max for Arrangement 12 80 N max for All Other Arrangements

OTHER CHARACTERISTICS

- **Interfacial Sealing Test:** 12.1 kPa with sealing plug
- **Flammability/Density/Toxicity** ABD0031 (AITM)
  - **Flammability**
    - Burn length (average) must not exceed 152 mm (6 inches)
    - After flame time (average) must not exceed 15 seconds
    - After flame time of drips (average) must not exceed 3 seconds
  - **Density**
    - Dm (flaming) < 200
    - Dm (non flaming) < 200
  - **Toxicity**
    - Hydrogen Fluoride: 100 ppm max
    - Hydrogen Chloride: 150 ppm max
    - Hydrogen Cyanide: 150 ppm max
    - Sulfur Dioxide: 100 ppm max
    - Nitrous Gases: 100 ppm max
    - Carbon Monoxide: 1,000 ppm max

ENVIRONMENTAL CHARACTERISTICS

- **Temperature Range:** -55 °C/+175 °C
- **Temperature Life:** 1,000 hours at 175 °C
- **Salt Spray:** 96 hours
- **Humidity:** 56 days
- **Altitude Immersion:** (12.1 kPa) 3 cycles – 50,000 feet (15,000 m)

For more details, please refer to the QR qualification test reports.

QR Series

QR PRODUCT OVERVIEW

The QR connector is composed of two subassemblies:

- A receptacle connector
- A plug connector

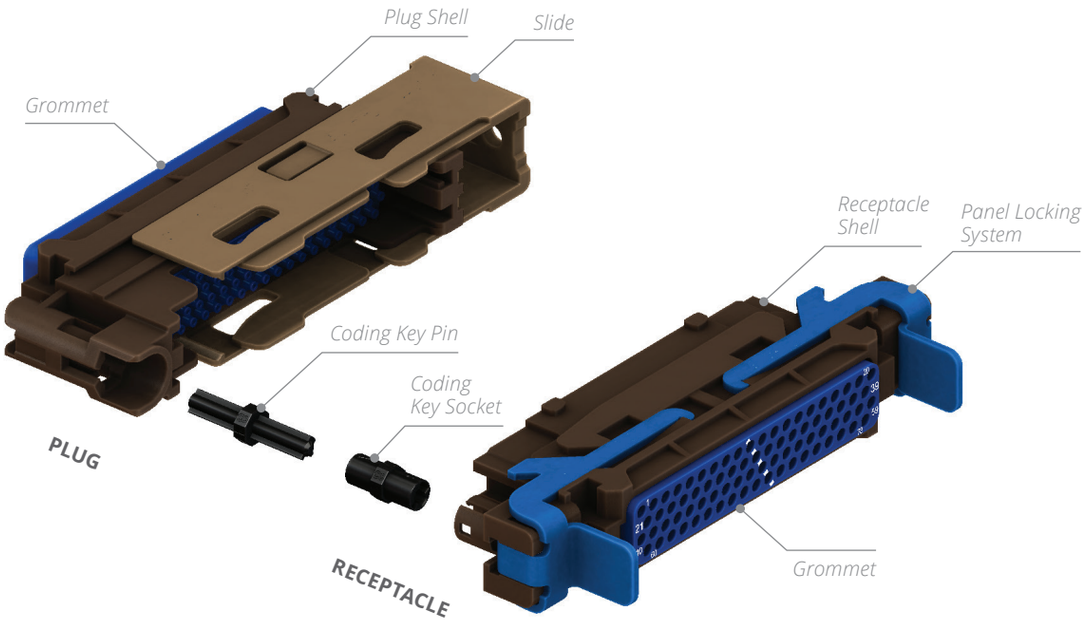

For each Receptacle/Plug, there is one version for male contacts and one for female contacts.

STANDARD VERSION

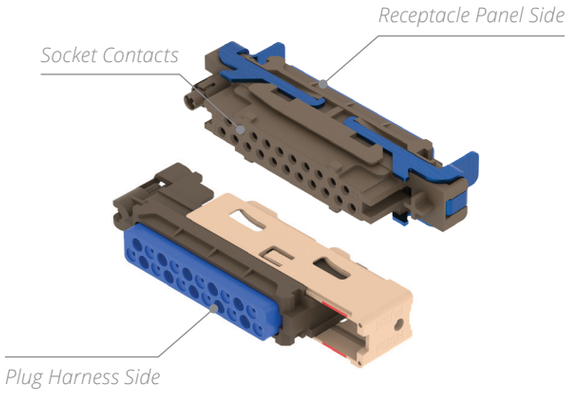

REVERSED VERSION

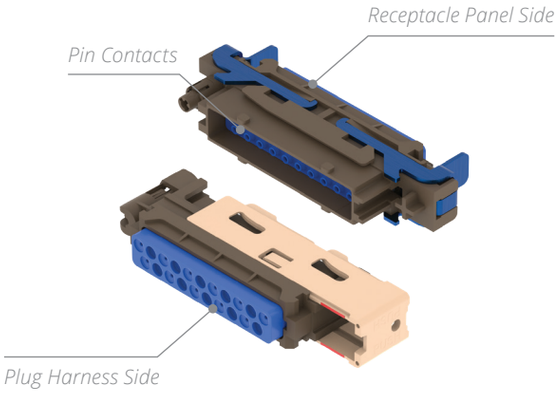

Notes

Except for the cavity change, the interior design of the shell is slightly different between a housing (socket or plug) for male contacts and its counterpart for female contacts

QR Series

HOW TO ORDER QR CONNECTORS

- Both pin and socket contacts can be used in plugs or receptacles.
- Standard versions are receptacle equipped with socket contacts and plug equipped with pin contacts.
- Reversed versions are receptacle equipped with pin contacts and plug equipped with socket contacts.
- PC tail contacts are only compatible with receptacle for equipment.
- Cross reference between QR and EN3545 is not possible (not compatible).
- Connectors are delivered with a protective cover designed to protect the contact cavities from dust and FOD. Radiall recommends keeping the cap installed while the connector is not mated or while access to the active area is not necessary.

QR

SERIES PREFIX

HOUSING TYPE
E: Environmental
D: Non-environmental

CONTACT ARRANGEMENT
01
12
13
04
05
16
07
08
19

CONTACT TYPE
M: Pin contacts not delivered
F: Socket contacts not delivered
P: Pin contacts delivered (crimp) [2]
S: Socket contacts delivered (crimp) [2]
YA: Gold finish straight PC tail pin contacts [1]

HOUSING SIDE
F: Plug with dust cap
E: Receptacle with dust cap
D: Receptacle for equipment with dust cap

CODING ORIENTATION [3]
1
2
3
4
5
6
7
8

CODING POSITION
A: Position side A if installed
B: Position side B if installed
C: Position side C if installed
D: Position side D if installed
E: Key coding A / B not installed
F: Key coding C / D not installed

DELIVERY CONDITION
1: 1 key delivered not installed
2: Key delivered installed
3: Coding not delivered

Notes
1. For other PC tail extension options, please contact us
2. Not applicable for arrangement 07. For arrangement 08 the contacts size 8 must be ordered separately. The contact sizes 22, 16 and 12 are from the 39029 standard.
3. Optional if installed

QR Series

POLARIZATION CODE

QR

SERIES PREFIX

HOUSING TYPE
P: Plug
R: Receptacle

CODING KEY
E: Key coding A / B not installed
F: Key coding C / D not installed

The polarization is made with 2 pairs of modular keys to ensure a coding of each arrangement. There are 4 modular coding keys (2 for the receptacle and 2 for the plug). Every key has 2 sides (A and B or C and D). To ensure proper mating between them, the coding shall be the same on plug and receptacle connectors (for example, coding A2 for both keys).

	PLUG	RECEPTACLE
QR	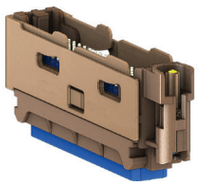	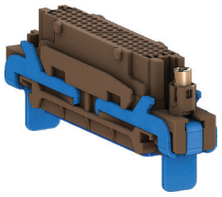
CODING DEVICE	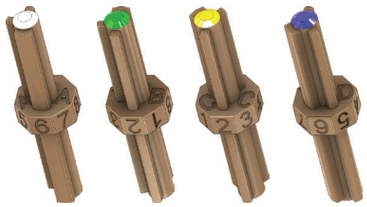 View A View B View C View D	View A View B View C View D

QR Series

QR SHELL DIMENSIONS

PLUG

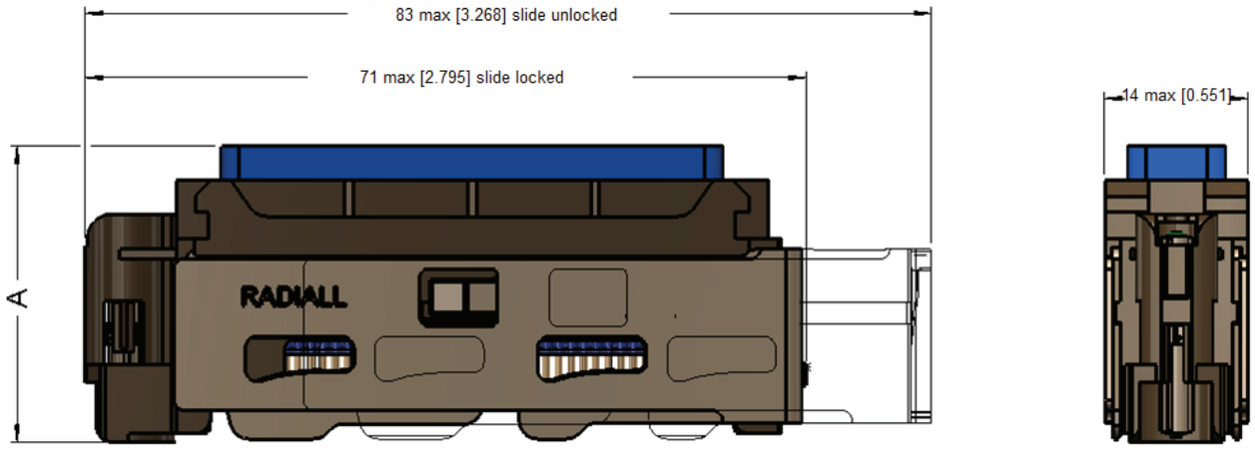

RECEPTACLE FOR CRIMP CONTACTS [1]

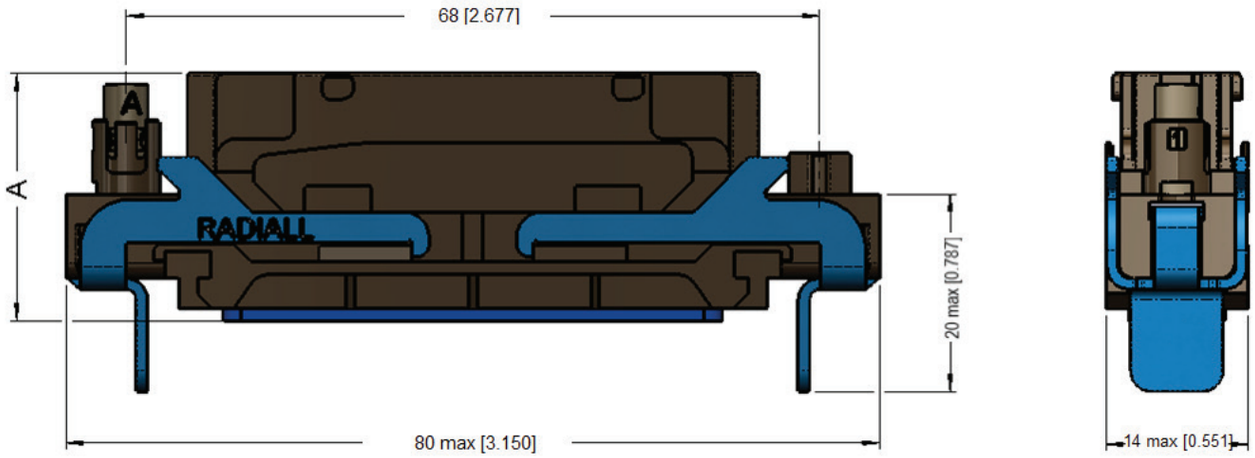

CONTACT ARRANGEMENT	GROMMET PROTRUSION (A) MAX MM (INCH) FOR RECEPTACLE	GROMMET PROTRUSION (A) MAX MM (INCH) FOR PLUG
01, 04, 05, 12, 13, 19	27 [1.06]	31.50 [1.24]
07, 08	32 [1.26]	33.50 [1.32]
16	37.50 [1.48]	41.50 [1.63]

Notes

1. Receptacles with PC Tail contacts have a different design. Please contact us for details.

QR Series

PANEL CUT-OUT STANDARD QUICK INSTALL (PANEL THICKNESS 0.8 - 1.73 [0.0315 - 0.068])

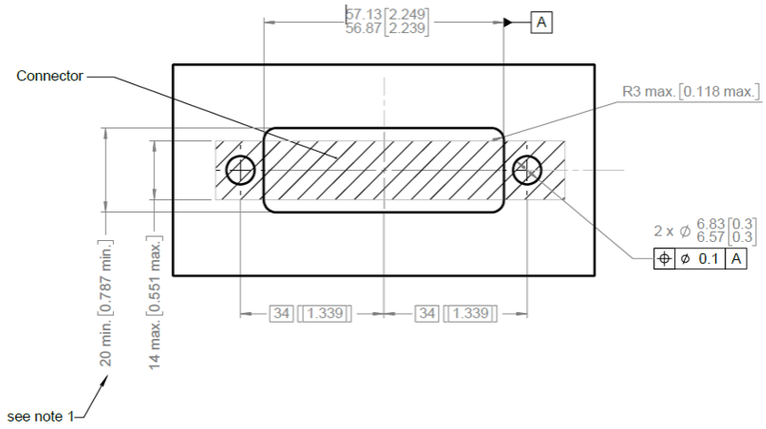

PANEL CUT-OUT QUICK INSTALL EQUIPMENT (PANEL THICKNESS 2 [0.079] MAX)

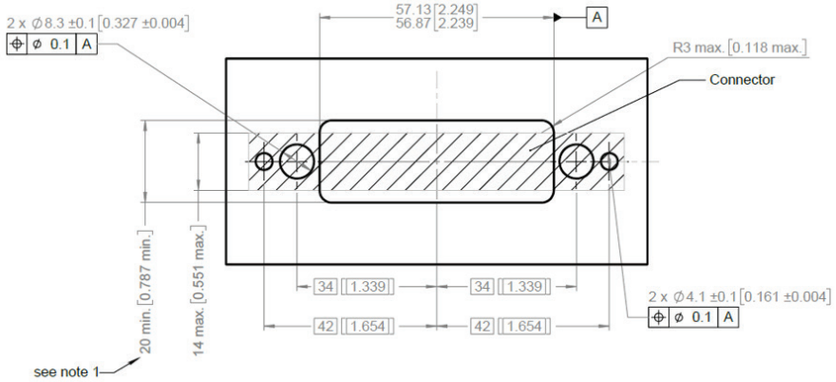

MULTIPLE PANEL CUT-OUT

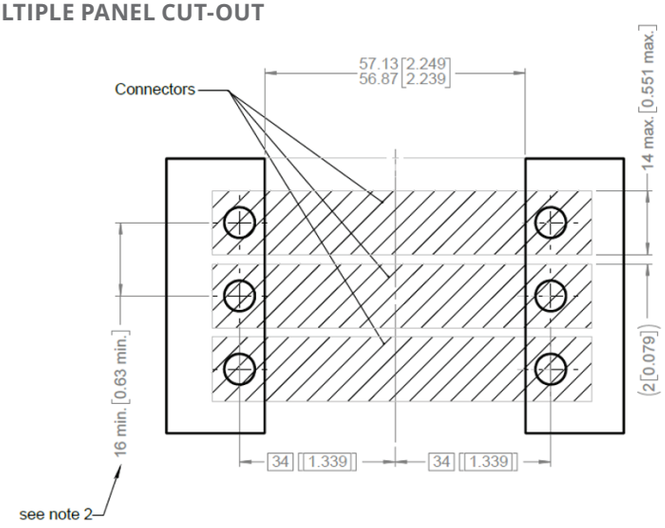

Notes

1. The minimum cutout width is contingent on the radius cutout value. Therefore, to achieve a desired narrow/wide cutout width, the radius must change accordingly.
2. The pitch between connectors depends on the minimum gap desired. A commonly used gap of 2 mm is used to define the pitch advised here.

QR SHELL WEIGHTS

HOUSING SIDE	CONTACT ARRANGEMENT	WEIGHT	
		WITH CAVITIES FOR PIN CONTACTS (M)	WITH CAVITIES FOR SOCKET CONTACTS (F)
PLUG (P) 1 CODING KEY INCLUDED	01	22g	23g
	12	22g	23g
	13	22g	24g
	04	22g	23g
	05	22g	23g
	16	25g	26g
	07	22g	24g
	08	22g	24g
	19	22g	24g
RECEPTACLE (R) 1 CODING KEY INCLUDED	01	23g	25g
	12	23g	25g
	13	23g	25g
	04	23g	25g
	05	23g	24g
	16	25g	27g
	07	23g	25g
	08	22g	26g
	19	22g	25g

QR Series

QR ARRANGEMENTS

CONTACT ARRANGEMENT NAME	CONTACT SIZE & TYPE						TOTAL QUANTITY OF CONTACTS
	22	20	16	12	10	8	
	SIGNAL	POWER	POWER	POWER	POWER OR TRIAXIAL	POWER OR QUADRAX OR TWINAX OR TRIAX	
07	-	-	-	-	-	5	5
16	-	-	-	-	7	-	7
05	-	-	-	13	-	-	13
04	-	-	21	-	-	-	21
08	-	18	-	-	-	3	21
19	-	25	12	-	-	-	37
13	39	-	10	-	-	-	49
01	-	50	-	-	-	-	50
12	78	-	-	-	-	-	78

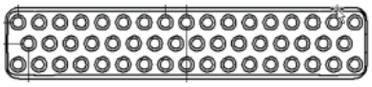

Arrangement 01:
50 Contacts #20

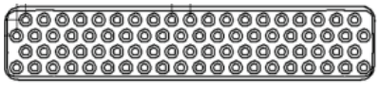

Arrangement 12:
78 Contacts #22

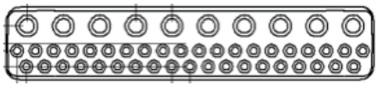

Arrangement 13:
39 Contacts #22
10 Contacts #16

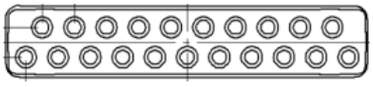

Arrangement 04:
21 Contacts #16

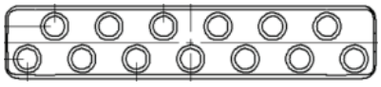

Arrangement 05:
13 Contacts #12

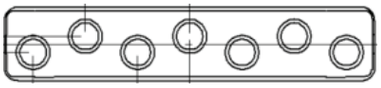

Arrangement 16:
7 Contacts #10

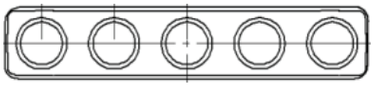

Arrangement 07:
5 Contacts #8

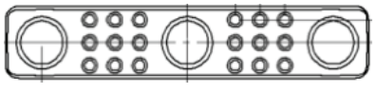

Arrangement 08:
18 Contacts #20
3 Contacts #8

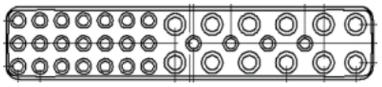

Arrangement 19:
25 Contacts #20
12 Contacts #16

Contacts

SIGNAL & POWER CRIMP CONTACTS

ELECTRICAL CHARACTERISTICS

Signal & Power Crimp Contacts for Copper Cables

CONTACT SIZE	WIRE SIZE	TYPE	ENVIRONMENTAL PART NUMBER	NON-ENVIRONMENTAL PART NUMBER	CRIMPING TOOL	POSITIONER	SELECTOR OF JAWS	INS/EXT TOOL
22	AWG26 AWG24 AWG22	Pin	670200 (per M39029/58-360) or 628200 (per EN3155-008M2222) [1]		282281 (M22520/2-01)	282562 (M22520/2-09)	2 3 4	282522 (M81969/14-01)
		Socket	670350 (M39029/57-354) or 628300 (per EN3155-003F2222) [1]			(M22520/2-06)		
20	AWG24 AWG22 AWG20	Pin	628220 (per EN3155-014M2020)		282281 (M22520/2-01)	(M22520/2-08)	5 6 7	282522001 (M81969/39-01)
		Socket	628320 (per EN3155-015F2020)					
16	AWG20 AWG18 AWG16	Pin	670230 (per M39029/58-364) or 628240 (per EN3155-008M1616) [1]		282291 (M22520/1-01)	(M22520/1-04) Blue	4 5 6	282515 (M81969/14-03)
		Socket	670380 (per M39029/57-358) or 628340 (per EN3155-003F1616) [1]					
12	AWG14 AWG12	Pin	670240 (per M39029/58-365) or 628250 (per EN3155-008M1212) [1]		282291 (M22520/1-01)	(M22520/1-04) Yellow	7 8	282549004 (M81969/14-04)
		Socket	670390 (per M39029/57-359) or 628350 (per EN3155-003F1212) [1]					
10	AWG12 AWG10	Pin	628260 (per EN3155-008M1010)		Manual tool: 282296 (M300BT) Pneumatic tool: (M22520/23-01)	Manual tool: DMC TP1526 Pneumatic tool: DMC WA23-102L	Manual tool: 2 (cable AWG12) 4 (cable AWG10) Pneumatic tool: DMC WA-168DA (AWG12) DMC WA-101DA (AWG10)	282549033 (M81969/14-05)
		Socket	628360 (per EN3155-003F1010)					
8	AWG08	Pin	628291001	628291	M22520/23-01	DMC WA23-296 L	DMC WA23-2	282549051 (M81969/14-12)
		Socket	628391001	628391				

Notes

1. The table shows the contact style and part number compatibility. When connectors are ordered with contacts included, the contact sizes 22, 16 and 12 come always with M39029 style.

Contacts

COAXIAL CRIMP CONTACTS

SIZE 8 COAXIAL CRIMP CONTACTS

CONTACT SIZE	CABLE TYPES	CONTACT GENDER	NON-ENVIRONMENTAL PART NUMBER [1]	EXTRACTION TOOL
8	RG400 ASNE0293XF	Pin	691800021	282549051 (M81969/14-12)
		Socket	691810021	
	Draka F1703-195 Gore GSC-03-81748-00 EN4604-003WZ	Pin	691800020	
		Socket	691810020	

TWINAX & TRIAX CRIMP CONTACTS

SIZE 8 TWINAX CRIMP CONTACTS

CONTACT SIZE	CABLE TYPES	CONTACT GENDER	NON-ENVIRONMENTAL PART NUMBER	ENVIRONMENTAL PART NUMBER	EXTRACTION TOOL
8	ABS0386WF Nexans ET96897 Draka F2703-37 TE-Raychem 1726A1424	Pin	617165014	[1]	282549051 (M81969/14-12)
		Socket	620065010	[1]	
	EN3375-009WX26 ASNE0807WX26 Nexans ET133199	Pin	628165012	[1]	
		Socket	620065012	[1]	
	Cheminax 2524B0524	Pin	617165025	628165026	
		Socket	617065025	628065026	

TRIAX CRIMP CONTACTS

CONTACT SIZE	CABLE TYPES	CONTACT GENDER	NON-ENVIRONMENTAL PART NUMBER [1]	EXTRACTION TOOL
8	EN3375-004 EN3375-005	Pin	691800071	282549051 (M81969/14-12)
		Socket	691800171	
	EN3375-003	Pin	691800070	
		Socket	691800170	
	EN3375-004CWJ24	Pin	ABS2231P02	
		Socket	ABS2231S02	
10	EN3375-006XM24 (ASNE0290XM24)	Pin	691800090	282549033 (M81969/14-05)
		Socket	691800190	

QUADRAX CRIMP CONTACTS

CONTACT SIZE	CABLE TYPES	CONTACT GENDER	NON-ENVIRONMENTAL PART NUMBER	ENVIRONMENTAL PART NUMBER	EXTRACTION TOOL
8	DRAKA F4704-4 (ABS0972KB24) DRAKA F4704-5 (ABS1503KD24)	Pin	628175070	[1]	282549051 (M81969/14-12)
		Socket	628075070	[1]	
	NF26Q100	Pin	617175070	628175072	
		Socket	617075070	628075072	
	NF24Q100	Pin	617175070	628175071	
		Socket	617075070	628075071	
	NF22Q100	Pin	617175040	[1]	
		Socket	620075040	[1]	
	JSFY02	Pin	628179002	[1]	
		Socket	620079002	[1]	

Notes

1. Please contact Radiall for environmental applications

Discover the perfect fit for your needs! Visit our website and try our easy-to-use selection tool: https://www.radiall.com/multipin-connectors.html?selector=multipin--contacts

Contacts

FIBER OPTIC CONTACTS & Q-MTITAN

QR COMPATIBILITY

Fiber optic contacts EN4531 with adapters in size 8 cavities are available with arrangements 07 (up to 5 contacts) and 08 (mix of optical and electrical contacts) [1]

12-channel Q-MTitan ARINC 846 fiber optic contact fits size 8 Quadrax cavities without adapters (5 Q-MTitan = 60 fiber optic in a Quick Install connector) [1]

SEALING PLUGS

Sealings plugs are dedicated to environmental insert cavities.

The sealing is guaranteed between each individual contact cavities. No filer plug or dummy contacts are necessary. Sealing plugs in unused cavities are optional, but recommended for future usage in order to avoid dust or FOD to enter the cavities.

SIZE	CONTACT CAVITY VERSION	COLOR	PART NUMBER	DRAWING
22	For Pin & Socket	Black	616910 (MS27488-22-2) or (E0616BC2200)	
20		Red	616911 (MS27488-20-2) or (E0616BC2000)	
16		Green	616912 (MS27488-16-2)	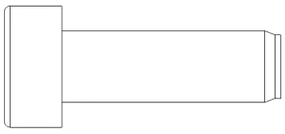
		Blue	or (E0616BC1600)	
12 & 10		Orange	616913 (MS27488-12-2)	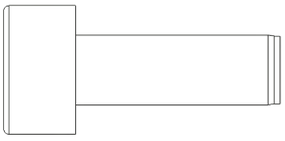
		Yellow	or (E0616BC1200)	
08		Red	628950020 (E0616BC0803)	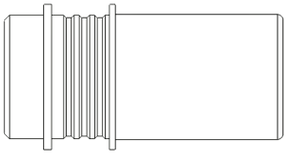

Notes

1. Please contact Radiall for performance information

Accessories

ACCESSORIES, SPARE PARTS & TOOLS

	PART NUMBER	DESCRIPTION
	628954001	Receptacle Dust Cap
	628954002	Plug Dust Cap
	282654002	Handle for test bench connector easier disconnection (Cable Clamps for any contact arrangement)
	282700500	Set of Mounting Tools for Key A, B, C, D
	282700100	Tool for Coding Key A – White [1]
	282700200	Tool for Coding Key B – Green [1]
	282700300	Tool for Coding Key C – Yellow [1]
	282700400	Tool for Coding Key D – Blue [1]

Notes

1. Tools for coding key are compatible with receptacle and plug.

Accessories

ACCESSORIES FOR CABLE

The Quick Install series is compatible with a wide range of standard cable clamp accessories.

The Quick Install plug and receptacle are suitable for use with EN3545-007 straight and right angle cable clamps for standard contacts and size 8 contacts.

		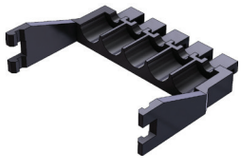	
EN 3545-007 SCD Radiall 628922003	EN 3545-007 SCG Radiall 628922004	EN3545-007 SCE Radiall 628922001	EN 3545-007 SCH Radiall 628922002

LOOKING FOR SOMETHING UNIQUE? WE CAN CREATE CUSTOM VERSIONS TAILORED TO YOUR SPECIFIC NEEDS.

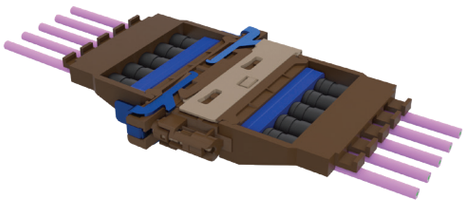

Optical Version

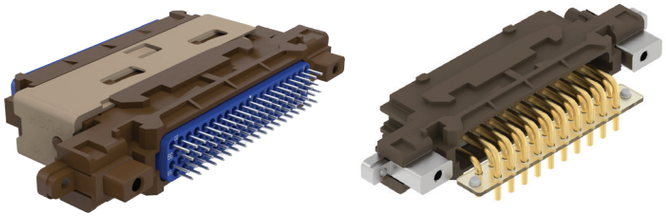

Receptacle Connectors Fitted with Straight or Right Angle Contacts are Available for Equipment Versions

Notes

INDEX

Radiall Part Numbers

PART NUMBER	PAGE
252546	7-21
282236	5-79, 6-27, 7-54, 7-62
282246	5-79, 6-26, 7-23, 7-24, 7-25, 7-42, 7-53, 7-54, 7-62
282247	5-79, 7-23, 7-24, 7-53, 7-62
282248	7-46, 7-62
282281	1-15, 1-16, 2-12, 2-13, 3-11, 5-34, 5-37, 5-38, 5-79, 6-22, 6-26, 6-27, 7-21, 7-24, 7-25, 7-42, 7-46, 7-51, 7-54, 7-62, 8-25, 8-33, 9-16, 9-22, 13-11
282291	1-15, 1-16, 2-12, 2-13, 3-11, 5-34, 5-35, 5-79, 6-22, 7-21, 7-23, 7-24, 7-62, 8-23, 8-33, 9-16, 9-22, 13-11
282292	5-79, 6-26, 7-25, 8-24, 8-25, 8-33, 9-16, 9-22
282293	5-79, 6-26, 6-27, 7-23, 7-24, 7-25, 7-42, 7-46, 7-53, 7-54, 7-62
282296	5-36, 6-22, 7-21, 7-62, 13-11
282297	6-26
282500	5-58, 5-59, 5-80, 6-23, 7-42, 7-62
282501	8-33
282502	8-33
282503	5-58, 5-80, 7-42, 7-62
282504	5-58, 5-59, 5-80, 7-42, 7-62
282512	1-17, 2-14
282515	1-15, 1-16, 1-21, 2-12, 2-13, 2-30, 3-11, 5-34, 5-54, 6-22, 6-25, 13-11
282522	1-15, 1-16, 1-21, 2-12, 2-13, 3-11, 5-34, 6-24, 13-11
282527	7-23
282546	5-34, 5-80, 6-25, 7-51, 7-62
282547	6-25, 7-21, 7-51, 7-62
282548	5-36, 5-80
282550	5-79, 6-26, 7-24, 7-25, 7-62
282555	5-79, 6-26, 7-25
282556	5-79, 6-26, 7-25
282557	5-36, 7-21, 7-62
282562	3-11, 13-11
282567	3-11
282572	6-27
282579	5-79, 6-22, 7-21, 7-51, 7-62
282580	6-26
282581	6-26
282586	6-22
282587	5-79
282588	1-15, 2-13, 5-36, 5-79
282613	1-15, 2-13
282664	1-48, 4-13
282665	1-48, 4-13
282666	1-48
282885	5-34, 5-37, 5-38, 5-80, 6-22, 6-24, 7-21, 7-51, 7-62
282886	1-15, 2-12, 5-34, 5-37, 5-38, 5-80, 6-24, 7-21, 7-51, 7-62
282890	5-56, 5-80, 7-22, 7-51, 7-62
282891	7-22, 7-51, 7-62
282892	5-50, 5-80, 7-62
282917	8-33
282920	8-23, 8-33, 9-16, 9-22
282921	8-23, 8-33
282929	7-62
282943	7-51, 7-62
282945	5-80, 7-62
282946	1-15, 1-17, 1-18, 1-21, 2-13, 2-14, 5-47, 5-48, 5-49, 5-50, 5-80, 7-21, 7-62, 11-11, 11-12
282948	7-52, 7-62

Radiall Part Numbers

PART NUMBER	PAGE
282949	7-52, 7-62
282959	7-46
282970	1-15, 1-16, 2-12, 2-13, 5-34, 5-37, 5-38, 5-79, 6-22, 7-21, 7-51, 7-62
282971	1-15, 1-16, 2-12, 2-13, 5-34, 5-37, 5-38, 5-79, 6-22, 7-21, 7-51, 7-62
282972	1-15, 1-16, 2-12, 2-13, 5-34, 5-35, 5-79, 6-22, 7-21, 7-51, 7-62
282973	8-24, 8-25, 8-33, 9-16, 9-22
282974	7-24, 7-25, 7-62
282975	8-23, 8-33, 9-16, 9-22
282976	8-23, 8-33, 9-16, 9-22
282981	8-24, 8-25, 8-33
282997	5-79, 7-23, 7-24
610026	7-53, 7-54
610040	7-54
610044	7-54
610046	7-54
610047	7-54
610049	7-54
610108	7-53
610118	7-53
610119	7-53
610120	7-25, 7-53, 7-54
610122	7-53
610123	7-53
610126	7-25, 7-53, 7-54
610127	7-53
610140	7-54
610146	7-54
610147	7-54
610148	7-54
610149	7-54
610203	7-23, 7-52
610204	7-23, 7-52
610214	7-23, 7-52
610215	7-52
610216	7-51
610217	7-52
610219	7-51
610220	7-51
610221	7-51
610224	7-52
610225	7-52
610228	7-52
610266	7-51
610303	7-23, 7-52
610304	7-23, 7-52
610314	7-23
610321	7-51
610325	7-51
610803	7-29
610804	7-29
610805	7-29
610806	7-29
610900	7-30

Radiall Part Numbers

PART NUMBER	PAGE
610901	7-30
610902	7-30
610906	7-30
610910	7-30
610911	7-30
610940	7-54
610941	1-23, 2-17, 7-29, 7-54
612813	9-19
612814	9-20
612823	9-19
612824	9-20
612837	9-19
612838	9-20
612845	9-19
612846	9-20
614120	9-16
614140	9-16
614160	9-16
614170	9-16
614200	9-16
614230	9-16
614240	9-16
614330	9-16
614340	9-16
616003	7-23
616004	7-23
616005	7-23, 7-53
616006	7-23
616007	7-23
616009	7-23, 7-53
616013	7-24
616014	7-24, 7-53
616015	7-24
616020	7-24
616021	7-24
616022	7-24
616023	7-24
616024	7-24
616026	7-24
616028	7-24
616030	7-25
616031	7-25
616032	7-25
616040	7-25
616041	7-25
616042	7-25
616043	7-25
616044	7-25
616090	7-46
616091	7-46
616092	7-46
616100	7-23
616111	7-24

PART NUMBER	PAGE
616112	7-24
616113	7-24
616120	7-24
616121	7-24
616122	7-24
616123	7-24
616124	7-24
616125	7-24
616126	7-42
616127	7-42
616128	7-24
616140	7-25
616141	7-25
616142	7-25
616143	7-25
616144	7-25
616150	7-25
616151	7-25
616153	7-25
616154	7-25
616163	7-24
616192	7-46
616200	7-21, 7-36, 7-51
616201	7-21, 7-51
616206	7-22, 7-51
616210	7-21, 7-36, 7-51
616211	7-21, 7-51
616216	7-22
616220	7-42
616222	7-42
616223	7-22
616224	7-42
616230	7-21, 7-36, 7-51
616231	7-21, 7-51
616234	7-42
616235	7-42
616240	7-21, 7-36, 7-51
616261	5-36, 7-21
616266	5-36, 7-21
616300	7-21, 7-36, 7-51
616301	7-21, 7-51
616303	7-22, 7-51
616306	7-22, 7-51
616310	7-21, 7-36, 7-51
616311	7-21, 7-51
616323	7-22
616330	7-21, 7-36, 7-51
616331	7-21, 7-51
616340	7-21, 7-36, 7-51
616361	5-36, 7-21
616366	5-36, 7-21
616379	7-22, 7-51
616802	7-54

Radiall Part Numbers

PART NUMBER	PAGE
616910	1-23, 1-65, 2-17, 3-21, 5-83, 6-32, 7-29, 7-36, 13-13
616911	1-23, 2-17, 3-21, 5-83, 6-32, 7-29, 7-36, 13-13
616912	1-23, 2-17, 3-21, 5-83, 6-32, 7-29, 7-36, 13-13
616913	1-23, 2-17, 3-21, 5-83, 6-32, 7-29, 7-36, 13-13
616915	7-29
616917	7-29
616923	7-29, 7-54
617001	1-17, 2-14
617002	1-17, 2-14
617003	1-17, 2-14
617004	1-17, 2-14
617005	1-17, 2-14
617030	1-17, 2-14
617031	1-17, 2-14
617032	1-17, 2-14
617033	1-17, 2-14
617035	1-17, 2-14
617050	1-18, 2-14, 11-11
617052	1-18, 2-14
617060	1-17, 2-14
617065	1-18, 2-14
617101	1-17, 2-14
617102	1-17, 2-14
617103	1-17, 2-14
617104	1-17, 2-14
617105	1-17, 2-14
617130	1-17, 2-14
617131	1-17, 2-14
617132	1-17, 2-14
617133	1-17, 2-14
617135	1-17, 2-14
617150	1-18, 2-14, 11-11
617152	1-18, 2-14
617160	1-17, 2-14
617165	1-18, 2-14
617200	1-15, 1-65, 2-12
617201	1-16, 2-13
617221	1-15, 2-12
617240	1-15, 2-12
617241	1-16, 2-13
617250	1-15, 1-65, 2-13
617280	1-15, 2-13
617300	1-15, 1-65, 2-12
617301	1-16, 2-13
617305	1-21
617320	1-15, 2-12
617340	1-15, 2-12
617341	1-16, 2-13
617350	1-15, 1-65, 2-13
617390	1-15, 2-13
617930	1-23, 2-17
617931	1-23, 2-17
618020	6-26
618023	6-26
618030	6-27
618032	6-27
618033	6-27
618035	6-27
618040	6-26
618041	6-26
618042	6-26
618050	5-50, 6-26, 7-25
618051	6-26
618053	6-26, 7-25
618054	5-50, 6-26, 7-25
618060	6-29, 11-11
618061	6-29, 11-11
618062	6-29
618066	6-29
618120	6-26
618123	6-26
618135	6-27
618140	6-26
618141	6-26
618142	6-26
618150	5-50, 6-26
618151	6-26
618152	6-27
618154	5-50, 6-26
618160	6-29, 11-11
618161	6-29, 11-11
618162	6-29
618163	6-30, 11-12
618164	6-30
618166	6-29
618180	6-29
618200	6-22
618210	6-22
618230	6-22
618240	6-22
618270	6-22
618300	6-22
618302	6-24
618310	6-22
618311	6-22
618330	6-22
618340	6-22
618341	6-22
618342	6-22
618360	6-23
618361	6-23
618362	6-23
618370	6-22
618810	6-33
618910	6-32
618911	6-32

Radiall Part Numbers

PART NUMBER	PAGE
618912	6-32
618913	6-32
618915	1-23, 2-17, 3-21, 5-83, 6-32
618940	6-32
618941	6-32
618953	5-103, 6-33
619050	5-45
619051	5-43
619052	5-44
619053	5-44
619054	5-44
619055	5-45
619056	5-46
619065	5-51
619150	5-45
619151	5-43
619152	5-44
619153	5-44
619154	5-44
619155	5-45
619156	5-46
619165	5-51
619166	5-51
619240	5-35
619270	5-36
619271	5-36
619370	5-36
619371	5-36
619552	5-82
619950	1-23, 2-17, 5-82
619953	1-23, 2-17, 5-82
620001	5-39
620003	5-39
620005	5-40
620011	5-41
620017	5-42
620020	5-47
620021	5-47
620022	5-47
620023	5-48
620024	5-48
620029	5-48
620044	5-41
620046	5-42
620047	5-42
620049	5-41, 5-42
620084	5-49
620101	5-39
620103	5-39
620107	5-40
620108	5-40
620109	5-40
620116	5-41, 5-42

PART NUMBER	PAGE
620117	5-41, 5-42
620120	5-47
620121	5-47
620122	5-47
620123	5-48
620124	5-48
620129	5-48
620134	5-49
620146	5-41, 5-42
620184	5-49
620200	5-34
620201	5-34
620202	5-56
620210	5-34
620230	5-34
620231	5-34
620240	5-35
620241	5-35
620280	5-37, 7-21
620281	5-38, 7-21
620290	5-37, 7-21
620291	5-38, 7-21
620300	5-34
620301	5-34
620302	5-56
620303	5-56
620305	5-56
620308	5-56
620310	5-34
620330	5-34
620331	5-34
620340	5-35
620341	5-35
620350	5-59
620351	5-59, 7-42
620352	5-59, 7-42
620353	5-59
620360	5-58
620361	5-58, 7-42
620362	5-58
620363	5-58
620380	5-37, 7-21
620381	5-38, 7-21
620390	5-37, 7-21
620391	5-38, 7-21
620910	5-84
620911	5-84
620912	5-84
620913	5-84
620919	5-82
620920	1-23, 2-17, 5-82, 6-32, 7-29, 7-54
620921	5-82, 6-32
620922	1-23, 2-17, 5-82, 6-32, 7-29, 7-54

Radiall Part Numbers

PART NUMBER	PAGE
620923	1-23, 2-17, 5-82, 6-32
620924	5-82, 7-29
620925	5-82
620926	5-82, 6-32
620940	5-87
620941	5-87
620942	5-87
620991	10-30
620992	10-30
620993	10-30
620994	10-30
620995	10-30
628200	13-11
628220	13-11
628240	13-11
628250	13-11
628260	13-11
628291	13-11
628300	13-11
628320	13-11
628340	13-11
628350	13-11
628360	13-11
628391	13-11
670050	11-11
670051	11-11
670150	11-11
670151	11-11
670200	3-11, 13-11
670210	3-11
670220	3-11
670230	3-11, 13-11
670240	3-11, 13-11
670310	3-11
670350	3-11, 13-11
670370	3-11
670380	3-11, 13-11
670390	3-11, 13-11
690020	8-25, 8-31, 9-16
690040	8-25, 8-32, 9-16
690060	8-24, 8-29, 9-16
690061	8-24, 8-29
690062	8-24, 8-29
690070	8-24, 8-30, 9-16
690120	8-25, 8-31
690140	8-25, 8-32
690160	8-24, 8-29
690161	8-24, 8-29
690162	8-24, 8-29
690170	8-24, 8-30
690200	8-23
690201	8-23
690215	8-23

PART NUMBER	PAGE
690220	8-22
690221	8-22
690222	8-22
690235	8-23
690240	8-23
690241	8-23
690300	8-23, 9-16
690301	8-23
690315	8-23
690320	8-22
690321	8-22
690322	8-22
690335	8-23
690340	8-23
690341	8-23
690401	8-28
690411	8-28
690421	8-28
690431	8-28
690441	8-28
690451	8-28
690461	8-28
690470	8-15
690471	8-15
690472	8-15
690473	8-15
690475	8-15
690476	8-15
690477	8-15
690478	8-15
690480	8-15
690481	8-15
690482	8-15
690483	8-15
690501	8-5, 8-28
690511	8-5, 8-28
690521	8-5, 8-28
690531	8-5, 8-28
690541	8-5, 8-28
690551	8-28
690561	8-28
690570	8-15
690571	8-15
690572	8-15
690573	8-15
690670	8-18
690671	8-18
690676	8-18
690677	8-18
690678	8-18
690679	8-18
690680	8-18
690681	8-18

Radiall Part Numbers

PART NUMBER	PAGE
690682	8-18
690683	8-18
690684	8-18
690686	8-18
690905	8-5, 8-28
690908	8-5, 8-28
690911	8-5, 8-28
690914	8-5, 8-28
690917	8-5, 8-28
690920	8-28
690923	8-28
690924	8-28
690930	8-5, 8-28
690931	8-5, 8-28
690932	8-5, 8-28
690933	8-5, 8-28
690935	8-28
690936	8-28
690939	8-5, 8-27
690940	8-5, 8-28
690941	8-5, 8-28
690942	8-5, 8-28
690943	8-5, 8-28
690945	8-28
690946	8-28
690949	8-5, 8-27
690951	8-27
690952	8-5, 8-27
690953	8-5
690954	8-27
690955	8-5, 8-27
690956	8-5, 8-27
690961	8-27
690962	8-5, 8-27
690963	8-5, 8-27
690964	8-27
690965	8-5, 8-27
690966	8-5, 8-27
690967	8-27
690971	8-17
690972	8-17
690973	8-17
690974	8-17
690977	8-17
690978	8-17
690979	8-17
690980	8-17
20521500	8-5
61914014	5-83
92505450	7-29
92505470	7-29
92505480	7-29
92505490	7-29

Radiall Part Numbers

PART NUMBER	PAGE
92505590	7-29
92505591	7-29
92505592	7-29
92505593	7-29
92505594	7-29
282521002	1-48, 1-60, 2-30
282521004	1-48, 1-60, 2-30
282521005	1-48, 2-30
282521007	1-48
282522001	1-15, 1-16, 1-21, 2-12, 2-13, 13-11
282540001	5-36
282549001	1-15, 1-18, 1-19, 1-21, 1-22, 2-13, 2-14, 2-15, 3-11, 4-5, 4-13, 5-36, 5-43, 5-44, 5-45, 5-51, 5-52, 5-80, 6-22, 6-29, 11-11, 11-12
282549004	1-15, 1-17, 1-18, 1-21, 2-13, 2-14, 3-11, 5-35, 5-54, 5-80, 6-22, 6-25, 13-11
282549005	5-59, 5-60, 5-80
282549006	5-60
282549009	5-60, 5-61, 5-80, 7-42
282549011	5-80
282549012	5-36, 5-51, 5-80
282549029	3-11, 5-34, 6-22, 6-24
282549033	13-11, 13-12
282549048	3-22
282549049	3-11
282549051	13-11, 13-12
282557020	1-15, 2-13
282557021	1-15, 2-13
282581013	1-15, 1-16, 2-12, 2-13
282581015	1-15, 2-12
282581019	3-11
282586003	1-15, 2-13
282586005	1-15, 2-13
282654002	13-14
282666001	1-48, 4-13
282666002	1-48, 4-13
282668001	1-48, 2-30
282690050	3-22
282690051	3-22
282700100	13-14
282700200	13-14
282700300	13-14
282700400	13-14
282700500	13-14
610020001	7-53, 7-54
610022001	7-53
616022002	7-24
616095000	7-26
616095001	5-50, 7-26, 11-11
616095004	7-26
616095005	7-26, 11-11
616095007	7-26
616095009	7-26, 11-11
616095010	7-26
616096001	7-26
616096002	7-26

Radiall Part Numbers

PART NUMBER	PAGE
616096003	7-26, 11-11
616096004	7-26, 11-11
616096006	7-26, 11-11
616102001	7-23
616103001	7-23
616105003	11-12
616107001	7-23
616195000	7-26
616195001	5-50, 7-26, 11-11
616195003	7-27
616195004	7-26
616195005	7-26, 11-11
616195007	7-26
616195008	7-27, 11-12
616195009	7-26, 11-11
616195012	7-26
616196001	7-26
616196003	7-26, 11-11
616196004	7-26, 11-11
616196005	7-27, 11-12
616196007	7-27, 11-12
616235010	7-42
616914010	7-29
616914013	1-23, 2-17
616925001	7-28
616925002	7-28
617001001	1-17, 2-14
617002001	1-17, 2-14
617003001	2-14
617004001	1-17, 2-14
617005001	1-17, 2-14
617050001	1-18, 2-14
617052001	1-18, 2-14
617065001	1-18, 2-14
617065011	1-18, 1-65, 2-14
617065020	1-18, 2-14
617065021	1-18, 2-14
617065025	13-12
617071010	1-19, 2-15, 4-5
617071011	1-19, 2-15
617071020	1-19, 2-15, 4-5
617071021	1-19, 2-15
617071040	1-19, 2-15, 4-5
617071041	1-19, 2-15
617075011	1-19, 2-15
617075041	1-19, 2-15
617075051	1-19, 2-15
617075053	1-19, 2-15
617075070	13-12
617077002	1-22
617077008	1-22
617077012	1-22
617077013	1-22

PART NUMBER	PAGE
617077502	1-22
617077508	1-22
617077512	1-22
617077513	1-22
617077702	1-22
617077708	1-22
617077712	1-22
617077713	1-22
617090010	1-18, 2-14
617090012	1-18, 2-14
617101001	1-17, 2-14
617102001	1-17, 2-14
617103001	1-17, 2-14
617104001	1-17, 2-14
617105001	1-17, 2-14
617150001	1-18, 2-14
617152001	1-18, 2-14
617165001	1-18, 2-14
617165011	1-18, 1-65, 2-14
617165014	13-12
617165020	1-18, 2-14
617165021	1-18, 2-14
617165025	13-12
617171010	1-19, 2-15, 4-5
617171011	1-19, 2-15
617171020	1-19, 2-15, 4-5
617171021	1-19, 2-15
617171030	1-19, 2-15, 4-5
617171031	1-19, 2-15
617175011	1-19, 2-15
617175012	1-19, 2-15
617175040	1-19, 2-15, 13-12
617175041	1-19, 2-15
617175051	1-19, 2-15
617175052	1-19, 2-15
617175053	1-19, 2-15
617175054	1-19, 2-15
617175070	13-12
617177001	1-22
617177008	1-22
617177012	1-22
617177013	1-22
617177501	1-22
617177508	1-22
617177512	1-22
617177513	1-22
617177701	1-22
617177708	1-22
617177712	1-22
617177713	1-22
617190010	1-18, 2-14
617200200	1-16, 2-13
617205001	1-21

Radiall Part Numbers

PART NUMBER	PAGE
617205009	1-21
617205010	1-21
617205015	1-21
617205501	1-21
617205509	1-21
617205510	1-21
617205515	1-21
617205701	1-21
617205709	1-21
617205710	1-21
617205715	1-21
617221050	1-15, 2-12
617221200	1-16, 2-13
617222010	1-21
617222012	1-21
617222013	1-21
617222014	1-21
617222510	1-21
617222512	1-21
617222513	1-21
617222514	1-21
617222710	1-21
617222712	1-21
617222713	1-21
617222714	1-21
617224001	1-16, 2-13
617225002	1-16, 2-13
617225003	1-15, 2-12
617240200	1-16, 2-13
617242008	1-21
617242009	1-21
617242010	1-21
617242017	1-21
617242508	1-21
617242509	1-21
617242510	1-21
617242517	1-21
617242708	1-21
617242709	1-21
617242710	1-21
617242717	1-21
617259003	1-21
617259005	1-21
617259006	1-21
617259007	1-21
617259503	1-21
617259505	1-21
617259506	1-21
617259507	1-21
617259703	1-21
617259705	1-21
617259706	1-21
617259707	1-21

PART NUMBER	PAGE
617260001	1-15, 2-13
617260002	1-15
617280003	1-15
617280004	1-15
617289003	1-21
617289004	1-21
617289006	1-21
617289007	1-21
617289503	1-21
617289504	1-21
617289506	1-21
617289507	1-21
617289703	1-21
617289704	1-21
617289706	1-21
617289707	1-21
617291001	1-21
617291002	1-15, 2-13
617291003	1-21
617291004	1-21
617291005	1-21
617291007	1-15
617291501	1-21
617291503	1-21
617291504	1-21
617291505	1-21
617291701	1-21
617291703	1-21
617291704	1-21
617291705	1-21
617300200	1-16, 2-13
617305001	1-21
617305002	1-21
617305008	1-21
617305500	1-21
617305501	1-21
617305502	1-21
617305508	1-21
617305700	1-21
617305701	1-21
617305702	1-21
617305708	1-21
617320200	1-16, 2-13
617322005	1-21
617322006	1-21
617322007	1-21
617322009	1-21
617322505	1-21
617322506	1-21
617322507	1-21
617322509	1-21
617322705	1-21
617322706	1-21

Radiall Part Numbers

PART NUMBER	PAGE
617322707	1-21
617322709	1-21
617324001	1-16, 2-13
617340200	1-16, 2-13
617342010	1-21
617342011	1-21
617342013	1-21
617342015	1-21
617342510	1-21
617342511	1-21
617342513	1-21
617342515	1-21
617342710	1-21
617342711	1-21
617342713	1-21
617342715	1-21
617359003	1-21
617359005	1-21
617359006	1-21
617359007	1-21
617359503	1-21
617359505	1-21
617359506	1-21
617359507	1-21
617359703	1-21
617359705	1-21
617359706	1-21
617359707	1-21
617370001	1-15, 2-13
617370005	1-15
617389003	1-21
617389004	1-21
617389006	1-21
617389007	1-21
617389503	1-21
617389504	1-21
617389506	1-21
617389507	1-21
617389703	1-21
617389704	1-21
617389706	1-21
617389707	1-21
617390003	1-15
617390004	1-15
617391001	1-21
617391002	1-15, 2-13
617391003	1-21
617391004	1-21
617391005	1-21
617391008	1-15
617391501	1-21
617391503	1-21
617391504	1-21

PART NUMBER	PAGE
617391505	1-21
617391701	1-21
617391703	1-21
617391704	1-21
617391705	1-21
617610188	1-65
617610189	1-65
617610212	1-65
617610213	1-65
617610419	1-65
617610558	1-65
617612800	4-11
617612801	4-11
617612802	4-11
617612803	4-11
617612804	4-11
617612805	4-11
617612806	4-11
617612807	4-11
617921029	1-33
617921030	1-33
617921031	1-33
617921032	1-33
617921044	1-33
617922007	1-46, 1-65
617922014	1-46
617922022	1-59
617922024	4-13
617922026	4-13
617922029	1-46
617924016	1-33
617925013	1-46
617925052	1-46
617925054	1-46
617925056	1-46
617925069	1-46
617925073	1-59
617928002	1-33
617928100	1-46
617929022	1-32, 1-47
617929023	1-32, 1-47
617929032	1-32
617929033	1-32
617939003	1-19, 2-15
617939005	1-19, 2-15
617954002	1-47, 1-59, 1-65
617954003	1-47, 1-59, 1-65
617954004	1-47, 1-59
617954005	1-47, 1-59
617954006	1-32
617954007	1-32
617954008	1-32
617954009	1-32

Radiall Part Numbers

PART NUMBER	PAGE
617954020	1-48, 1-60, 2-30
617954028	1-32
617954034	1-32
617954041	2-30
617954042	2-30
617954044	1-32
617954045	1-32
617954055	2-30
617954101	1-47
617980012	1-40, 1-47
617980013	1-40, 1-47
617980022	1-40, 1-47
617980023	1-40, 1-47
617980028	1-40, 1-47
617980029	1-40, 1-47
617980030	1-32, 1-59, 2-30
617980031	1-32, 1-59, 2-30
617980032	1-32
617980033	1-32
617980052	1-59
617980066	1-40, 1-47
617980067	1-40, 1-47
617991001	2-29
617991002	2-29
617991010	2-29
618021001	6-26
618024001	6-26
618040003	6-26
618124001	6-26
618140003	6-26
618149012	5-60
618149013	5-60
618149016	5-60
618149017	5-60
618149018	5-60
618153001	6-27
618153002	6-28
618153003	6-28
618155001	5-59
618155002	5-59
618155011	5-59
618163005	6-31
618164001	6-30
618164002	6-31
618164003	6-31
618213001	6-24
618213002	6-24
618213005	6-24
618213006	6-24
618213007	6-24
618213008	6-24
618233001	6-25
618233002	6-25

PART NUMBER	PAGE
618233003	6-25
618243001	6-25
618243002	6-25
618243003	6-25
618270001	6-22
618302001	6-24
618303001	6-24
618303002	6-24
618303003	6-24
618303004	6-24
618303005	6-24
618303007	6-24
618303008	6-24
618303009	6-24
618303010	6-24
618303011	6-24
618304001	6-23
618304002	6-23
618304003	6-23
618304004	6-23
618316001	6-24
618360001	6-23
618361001	6-23
618362001	6-23
618370001	6-22
618500061	6-23
618500081	6-23
618800002	6-32
618801002	6-32
618802010	6-32
618802011	6-32
618810001	6-33
618810002	6-33
618940001	6-32
618941001	6-32
618953001	5-102, 6-33
618953002	5-101, 6-33
618953010	6-33
618953011	6-33
618953020	6-33
618953021	6-33
619050001	5-45
619051001	5-43
619052001	5-44
619053001	5-44
619054001	5-44
619054002	5-45
619055001	5-45
619056001	5-46
619069001	5-51
619069002	5-51
619070001	11-11
619070011	11-11

Radiall Part Numbers

PART NUMBER	PAGE
619070021	11-11
619070031	11-11
619140007	5-60
619140008	5-60
619140009	5-60
619140010	5-60
619140011	5-60
619140012	5-60
619140013	5-60
619140014	5-60
619140507	5-60
619140509	5-60
619140510	5-60
619140511	5-60
619150001	5-45
619151001	5-43
619152001	5-44
619153001	5-44
619154001	5-44
619155001	5-45
619156001	5-46
619162009	5-61
619162010	5-61
619162011	5-61
619162012	5-61
619162014	5-61
619162015	5-61
619162016	5-61
619162017	5-61
619162509	5-61
619162511	5-61
619162514	5-61
619162516	5-61
619169001	5-51
619170001	11-11
619170011	11-11
619170021	11-11
619170031	11-11
619960005	5-100
620001012	5-41
620019105	5-42
620043001	5-41
620047010	5-42
620065010	1-18, 2-14, 13-12
620065012	13-12
620067001	5-50
620075010	1-19, 2-15, 4-5, 5-52, 6-29, 7-27
620075011	5-52, 6-29, 7-27
620075020	5-52, 6-29, 7-27
620075021	1-19, 2-15, 4-5, 5-52, 6-29, 7-27
620075040	1-19, 2-15, 13-12
620075050	1-19, 4-5, 6-29, 7-27
620075051	5-52, 6-29, 7-27

PART NUMBER	PAGE
620075070	2-15, 5-52
620079001	5-52, 6-29, 7-27
620079002	5-52, 6-29, 7-27, 13-12
620082001	5-49
620083001	5-49
620101001	5-39
620101003	5-39
620101004	5-39
620101011	5-41
620101012	5-41
620107001	5-40
620108002	5-40
620109001	5-40
620119100	5-42
620119102	5-42
620119105	5-42
620133001	5-60
620133003	5-60
620133006	5-60
620133007	5-60
620133009	5-60
620133010	5-60
620133503	5-60
620133506	5-60
620133509	5-60
620133510	5-60
620165010	1-18, 2-14
620167001	5-50
620175010	4-5, 5-52, 6-29, 7-27
620175011	5-52, 6-29, 7-27
620175020	5-52, 6-29, 7-27
620175021	4-5, 5-52, 6-29, 7-27
620175050	4-5, 5-52, 6-29, 7-27
620175051	5-52, 6-29, 7-27
620176008	4-5, 5-61, 7-42
620176009	4-5, 5-61
620176010	4-5, 5-61
620176011	4-5, 5-61
620176012	4-5, 5-61
620176013	4-5, 5-61
620176014	4-5, 5-61
620176016	4-5, 5-61
620176508	4-5, 5-61
620176509	4-5, 5-61
620176511	4-5, 5-61
620176513	4-5, 5-61
620179001	5-52, 6-29, 7-27
620179002	5-52, 6-29, 7-27
620182001	5-49
620183001	5-49
620202005	5-56
620214003	5-58
620214008	5-58

Radiall Part Numbers

PART NUMBER	PAGE
620214010	5-58
620214013	5-58
620214018	5-58
620214019	5-58
620214021	5-58
620214022	5-58
620214503	5-58
620214510	5-58
620214518	5-58
620214521	5-58
620234003	5-58
620234004	5-58
620234008	5-58
620234017	5-58
620234018	5-58
620234019	5-58
620234021	5-58
620234022	5-58
620234503	5-58
620234504	5-58
620234518	5-58
620234521	5-58
620244003	5-59
620244005	5-59
620244008	5-59
620244016	5-59
620244018	5-59
620244019	5-59
620244021	5-59
620244022	5-59
620244503	5-59
620244505	5-59
620244518	5-59
620244521	5-59
620305005	5-56
620360005	5-58
620360500	5-58
620361005	5-58
620361500	5-58
620362005	5-58
620362500	5-58
620363005	5-58
620363500	5-58
620913001	5-84
620913002	5-84
620913003	5-84
620913004	5-84
620913005	5-84
620913006	5-84
620913007	5-84
620913008	5-84
620914001	5-88
620934001	5-82

PART NUMBER	PAGE
620935001	5-82
620936001	5-82
620936002	5-82
620937001	5-82
620939200	5-88
620939201	5-88
620946001	5-55
620946002	5-55
620946003	5-55
620946004	5-55
620946005	5-55, 7-28
620946006	5-55, 7-28
620995001	5-86
620995002	5-86, 5-103
620995003	5-85
620995004	5-85, 5-101
620995005	5-86
620995006	5-86, 5-103
620995007	5-85, 5-101
620995008	5-85, 5-101
620995009	5-86
620995010	5-86
620995011	5-85
620995012	5-85, 5-102
620995013	5-86
620995014	5-86
620995015	5-85
620995016	5-85, 5-102
620995017	5-86, 5-103
620995018	5-85, 5-102
627802001	3-22
627900001	3-22
627954001	3-22
627954002	3-22
627954003	3-22
627954004	3-22
627990001	3-22
627990002	3-21
628065026	13-12
628075070	13-12
628075071	13-12
628075072	13-12
628165012	13-12
628165026	13-12
628175070	13-12
628175071	13-12
628175072	13-12
628179002	13-12
628291001	13-11
628391001	13-11
628922001	13-15
628922002	13-15
628922003	13-15

Radiall Part Numbers

PART NUMBER	PAGE
628922004	13-15
628950020	13-13
628954001	13-14
628954002	13-14
670001007	3-12, 12-7
670075012	3-11
670075023	3-11, 12-7
670075028	3-11, 12-7
670075029	3-11
670101007	3-12, 12-7
670175012	3-11, 12-7
670175023	3-11, 12-7
670950013	3-22
690220001	8-22
690221001	8-22
690222001	8-22
690320001	8-22
690321001	8-22
690322001	8-22
690767001	8-20
690767002	8-20
690767003	8-20
690767004	8-20
690767005	8-20
690767006	8-20
690768001	8-20
690768002	8-20
690768003	8-20
690768004	8-20
690768005	8-20
690768006	8-20
690769001	8-20
690769002	8-20
690769003	8-20
690769004	8-20
690769005	8-20
690769006	8-20
690778001	8-20
690778002	8-20
690778003	8-20
690778004	8-20
690778005	8-20
690778007	8-20
690848001	8-5
690848002	8-5
690848003	8-5
690848006	8-5
690848007	8-5
690957001	8-27
690967001	8-27
691800020	13-12
691800021	13-12
691800070	13-12

PART NUMBER	PAGE
691800071	13-12
691800090	13-12
691800170	13-12
691800171	13-12
691800190	13-12
691810020	13-12
691810021	13-12
ABS2231P02	13-12
ABS2231S02	13-12
EPXBE06PB	1-65
EPXBE06SB	1-65
EPXBE25Q1PA	1-65
EPXBE25Q1SA	1-65
F718211200	1-23, 2-17
F724001000	5-54
F724002000	7-28
F724004000	5-54
F724005000	7-28
F724007000	7-28
F724009000	7-28
F724010000	5-54
F724011000	7-28
F724012000	5-54
F724040000	5-54
F724041000	7-28
F724101000	5-54, 7-28
F724104000	5-54, 7-28
F724107000	7-28
F724109000	5-54, 7-28
F724111000	5-54, 7-28
F724140000	5-54, 7-28
F724203000	5-54
F724204000	5-54
F724242000	5-54
F724303000	5-54
F724304000	5-54
F724342000	5-54
F780855000	1-48, 1-60, 2-30
MB07HAIS2	10-28
MB07HANC	10-28
MB07HCIS	10-28
MB07HCNC	10-28
MB11HAIS2	10-28
MB11HANC	10-28
MB11HCIS	10-28
MB11HCNC	10-28
MB11HLIS2	10-29
MB11HLNC	10-29
MB11HVIS	10-29
MB11HVNC	10-29
MB14HAIS2	10-28
MB14HANC	10-28
MB14HCIS	10-28

Radiall Part Numbers

PART NUMBER	PAGE
MB14HCNC	10-28
MB14HLIS2	10-29
MB14HLNC	10-29
MB14HVIS	10-29
MB14HVNC	10-29
MB20HAIS2	10-28
MB20HANC	10-28
MB20HCIS	10-28
MB20HCNC	10-28
MB26HAIS2	10-28
MB26HANC	10-28
MB26HCIS	10-28
MB26HCNC	10-28
MB26HLIS2	10-29
MB26HLNC	10-29
MB26HVIS	10-29
MB26HVNC	10-29
MB34HAIS2	10-28
MB34HANC	10-28
MB34HCIS	10-28
MB34HCNC	10-28
MB34HLIS2	10-29
MB34HLNC	10-29
MB34HVIS	10-29
MB34HVNC	10-29
MB50HAIS2	10-28
MB50HANC	10-28
MB50HCIS	10-28
MB50HCNC	10-28
MB50HLIS2	10-29
MB50HLNC	10-29
MB50HVIS	10-29
MB50HVNC	10-29
MB75HAIS2	10-28
MB75HANC	10-28
MB75HCIS	10-28
MB75HCNC	10-28
MB75HLNC	10-29
MB75HVNC	10-29
MM07HAIS	10-14
MM07HANC	10-14
MM07HCIS	10-14
MM07HCNC	10-14
MM14HAIS	10-14
MM14HANC	10-14
MM14HCIS	10-14
MM14HCNC	10-14
MM20HAIS	10-14
MM20HANC	10-14
MM20HCIS	10-14
MM20HCNC	10-14
MM26HAIS	10-14
MM26HANC	10-14

PART NUMBER	PAGE
MM26HCIS	10-14
MM26HCNC	10-14
MM34HAIS	10-14
MM34HANC	10-14
MM34HCIS	10-14
MM34HCNC	10-14
MM50HAIS	10-14
MM50HANC	10-14
MM50HCIS	10-14
MM50HCNC	10-14
R282600000	1-15, 2-13
R282650000	1-15, 2-13

Notes

SIMPLIFICATION
is our **INNOVATION**

We advance the design and engineering process for innovators, ground breakers and pioneers of technology. We reduce weight, improve durability and streamline installation to provide leading-edge connectors that drive product performance.

AREA OFFICES LOCAL CONTACTS

EUROPE	ADDRESS	PHONE	FAX	EMAIL
FINLAND	**Radiall Finland** PO Box 202, 90101, Oulu	+358407522412		infofi@radiall.com
FRANCE	**Radiall SA** 25 Rue Madeleine Vionnet, 93300, Aubervilliers	+33149353535		info@radiall.com
GERMANY	**Radiall GmbH** Carl-Zeiss-Straße 10, 63322, Rödermark	+49607491070	+496074910710	infode@radiall.com
ITALY	**Radiall Italia S.R.L.** Corso Europa, 292, 20017 Rho MI, Italy	+39024885121	+390248843018	infoit@radiall.com
NETHERLANDS	**Radiall Nederland BV** Hogebrinkerweg 15b, 3871, KM Hoevelaken	+31332534009	+31332534512	infonl@radiall.com
SWEDEN	**Radiall AB** Sollentunavägen 63, 191 40 Sollentuna	+4684443410		infose@radiall.com
UNITED KINGDOM	**Radiall Ltd.** Profile West, 950 Great West Rd., Brentford, Middlesex TW8 9ES	+441895425000	+441895425010	infouk@radiall.com

ASIA				
CHINA	**Shanghai Radiall Electronics Co., Ltd.**	+862166523788	+862166521177	infosh@radiall.com
	No.688 Hui Fang Road, Shanghai, China, 201806			
HONG KONG	**Radiall Electronics (Asia) Ltd.** Room A, 16/F., Ford Glory Plaza,	+85229593833	+85229592636	infohk@radiall.com
	37-39 Wing Hong Street, Cheung Sha Wan, Kowloon, Hong Kong			
INDIA	**Radiall India Pvt. Ltd.**	+918028395271	+918028397228	infoin@radiall.com
	25D, Phase 2, Peenya Industrial Area, Bengaluru 560 058			
JAPAN	**Nihon Radiall K.K.**	+81364274455	+81364274456	infojp@radiall.com
	Sawada Building 8F, Shibuya-ku, Tokyo 150-0011			

AMERICAS				
USA & CANADA	**Radiall USA, Inc.** 8950 South 52nd Street, Ste. 401 Tempe, AZ 85284	+14806829400	+14806829403	infousa@radiall.com

GLOBAL PRESENCE

Australia · Austria · Belgium · Brazil · Czech Republic · Denmark · Estonia · Greece · Hungary · Indonesia · Israel · Korea · Latvia · Lithuania
Malaysia · Norway · Philippines · Poland · Portugal · Singapore · South Africa · Spain · Switzerland · Taiwan · Thailand · Turkey · Vietnam