MMC SERIES

Section 8 Table of Contents

INTRODUCTION

Introduction....8-2
Applications....8-2
Features....8-2
Product Overview....8-3
Electrical Characteristics....8-4
Mechanical & Environmental Characteristics....8-4
Product Materials & Masses....8-5
How To Order Connectors....8-6
Part Numbering....8-6

CONTACTS

Contact Arrangements....8-7 to 8-8
Rack Guides Dimensions....8-9 to 8-10
Fixed Jackscrews Dimensions....8-11 to 8-12
Rotating Jackscrews Dimensions....8-13 to 8-14
Block 104 Contacts....8-15 to 8-17
Block 158 Contacts....8-18 to 8-19
Block 208 Contacts....8-20 to 8-21
Contacts....8-22
Front Release & Front Removable Contacts....8-22
Equipment Signal Contacts....8-23
Twisted Pair Crimp Contacts....8-24
Micro-Coaxial Contacts....8-25
Panel Cut-Out....8-26
Spare Parts for Guides....8-27
Spare Parts for Insulators, Backshells & Shrouds....8-28
Wiring Instructions....8-29 to 8-32
Tools....8-33

INTRODUCTION

The Radiall MMC series was designed in response to the majority of connection problems of cabling installation, internal and external on electrical and electronic equipment.

The series conforms to the French specification NF-C-93 426 HE 621-622.

They are made up of a rectangular insulation block which accepts equally male or female contacts fitted with different types of wires and coaxial cables. A large number of accessories are available for the MMC series, including: backshell with cable clamp, contact protection shrouds, and locking. This makes it possible for the connector to be manufactured exactly to the corresponding needs of the user.

APPLICATIONS

A simple, yet highly reliable construction makes the MMC offering enormously adaptable through use of the broad range of accessories. This has allowed the Radiall MMC series to be widely approved for the use in all civil and military fields such as computers, telecommunications, medical, aeronautical, naval and nuclear.

© Eurocopter-Jérome DEULIN

© Courtesy of US Army

FEATURES

All of the contacts are removable in order to facilitate replacement, repairs or modification to circuits.

A range of robust manual and automatic tooling with easy to follow instructions provides straight-forward connector/cable assembly. Fully conforms to the French specification NF-C-93 426 HE 621-622.

Introduction

PRODUCT OVERVIEW

Detailed view of the various parts of this series connector.

JACKSCREWS **RACK GUIDES**

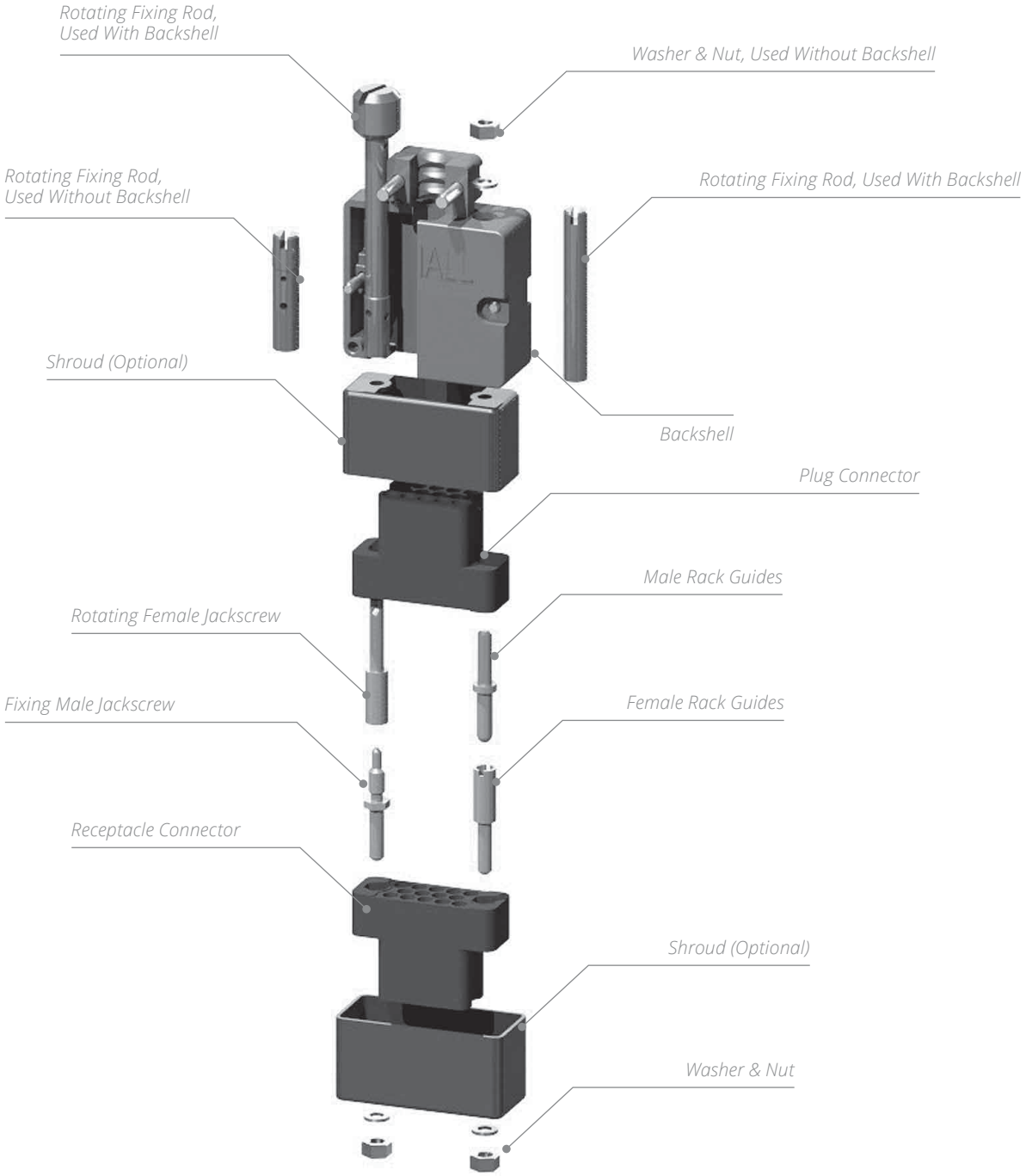

ELECTRICAL CHARACTERISTICS

EQUIPMENT WIRE CONTACTS

WIRE SECTION	AWG	16	18	20	22	24	26	28
	mm²	1.34	0.93	0.60	0.38	0.22	0.14	0.093
Current Rating (Amp)		13	10	7.5	5	3	2	1
Maximum Ø on Insulation		3.10						
Contact Resistance		≤ 5 m Ω						

COAXIAL CONTACTS

- **Nominal Impedance:** 50 Ω
- **Operating Frequency:** 0 to 1,000 MHz
- **Dielectric Withstanding Voltage:** 600 Vrms at 50 Hz (At Sea Level)
- **Insulation Resistance:** ≥ 5,000 MΩ
- **Contact Resistance:** ≤ 12 mΩ

FREQUENCY	0–200MHZ	200–500 MHZ	500–1000 MHZ
Voltage Standing Wave Ratio (VSWR)	1.10	1.15	1.40
Insertion Loss by Pair (dB)	< 0.015	< 0.025	< 0.025

CONNECTORS

- **Insulation Resistance:** > 5,000 MΩ
- **Dielectric Withstanding Voltage:** 1,500 Vrms at 50 Hz (At Sea Level)

MECHANICAL & ENVIRONMENTAL CHARACTERISTICS

- **Retention of the Contact in Moulding:** > 50 N (11.24 lbs)
- **Mating Force per Contact Pair:** < 3.4 N (0.76 lbs)
- **Durability:** 500 matings
- **Vibration:** 20 g (0.71 oz) from 80 to 2,000 Hz
- **Shock:** 50 g (1.76 oz)
- **Temperature Range:** -55 °C at +125 °C (-131 °F to 257 °F)
- **Humidity:** 21 days
- **Salt Spray:** 48H

Introduction

PRODUCT MATERIALS

DESCRIPTION		MATERIAL	PLATING
Connector		Glass Filled Phenolic	-
Equipment Wire Contacts	Body Spring Retention Clip	Copper Alloy	Gold Over Nickel Gold Over Nickel Nickel
Coaxial Contacts	Body & Center Contacts Ferrule Insulator	Copper Alloy Copper Alloy PTFE	Gold Over Nickel Nickel
Rack Guide		Brass	Nickel-Plated
Jackscrews		Stainless Steel	-
Shroud		Steel	Yellow Chromate Cadmium Plated
Backshell		Zinc or Aluminium Alloy	Painted Black
Strain Relief Cable Clamp		Stainless Steel	-

PRODUCT MASSES

SIZE	MASSES g (oz)	TYPE
14	7 (0.246)	Plug Connector
20	8 (0.282)	
26	11 (0.388)	
34	19 (0.670)	
42	22 (0.776)	
690501	7 (0.246)	Receptacle Connector
690511	8 (0.282)	
690521	11 (0.388)	
690531	19 (0.670)	
690541	22 (0.776)	
690962	2 (0.070)	Rack Guide
690952		
690963	8 (0.282)	
690953		
690965	6 (0.211)	Short Jackscrew
690955		
690966	15 (0.529)	Long Jackscrew
690949	18 (0.634)	
690956	16 (0.564)	
690939	18 (0.634)	

REFERENCES	MASSES g (oz)	TYPE
690940	15 (0.529)	Shroud Male
690941	16 (0.564)	
690942	18 (0.634)	
690943	22 (0.776)	
690930	14 (0.493)	Shroud Female
690931	15 (0.529)	
690932	17 (0.599)	
690933	25 (0.881)	
690905	57 (2.010)	Backshell Top Entry
690908	65 (2.292)	
690911	77 (2.716)	
690914	101 (3.562)	
690917	125 (4.409)	
20521500	39 (1.375)	Backshell Side Entry
(14) 690848001	14 (0.493)	Strain Relief Top Entry
(20) 690848002	16 (0.564)	
(26) 690848003	18 (0.634)	
(50) 690848006	28 (0.987)	
(75) 690848007	40 (1.410)	

Introduction

HOW TO ORDER CONNECTORS

A pair of MMC connectors is made up of the following:

- A block "P" (plug)
- A block "R" (receptacle)

Of identical dimensions but distinguished by:

- The engraved letters "P" and "R" on the mating faces
- The contact identification and position of the cavities is a mirror image of the mating half.

Each block "P" and "R" must be fitted with male and female guides or jackscrews.

- On the block P female guide beside hole 1 or A
- On the block R male guide beside hole 1 or A (in order to prevent mismatching and misalignment).

PART NUMBERING

Connectors with guides (without other accessories)

690 600 690 600 O A O

SERIES
Basic code (see table below for selection)

CONNECTORS WITH ACCESSORIES

SERIES

BASIC CODE (see table below for selection)

MANDATORY

ACCESSORIES [2]
O: No accessories
A: Backshell top entry
B: Backshell side entry (only 75 way)
C: Top entry strain relief clamp (not available in 34 and 42 way)

SHROUDS
O: No shroud
A: Male shroud without polarizing [1]
Male shroud with polarizing [2]
F: Female shroud without polarizing [1]
Female shroud with polarizing [2]

IN	1	3	5	7
CODE	B	C	D	E

IN	1	3	5	7
CODE	G	H	J	K

NUMBER OF CONTACTS	RACK GUIDES		FIXED JACKSCREWS		ROTATING JACKSCREWS	
	PLUG	RECEPTACLE	PLUG	RECEPTACLE	PLUG	RECEPTACLE
14	400	500	701	700	600	602
20	410	510	711	710	610	612
26	420	520	721	720	620	622
34	430	530	731	730	630	632
42	440	540	741	740	640	642
50	450	550	751	750	650	652
75	460	560	761	760	660	662

Example: 701 goes with 602

Notes

1. Not available in 42 way
2. Not available in 14 way
When connector has a shroud with polarizing, polarization starts from the cavity A or 1 side of the connector (refer to page 8-28)

Contacts

CONTACT ARRANGEMENTS

VIEW WIRING SIDE mm (inch)

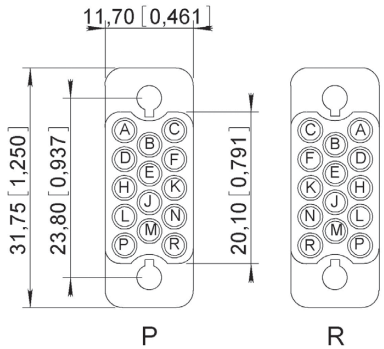

14 CONTACTS

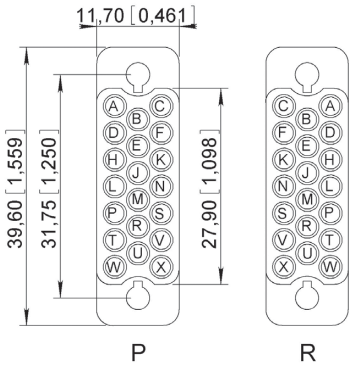

20 CONTACTS

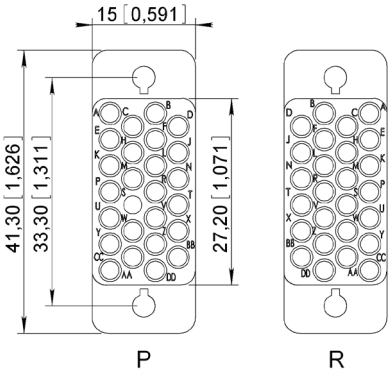

26 CONTACTS

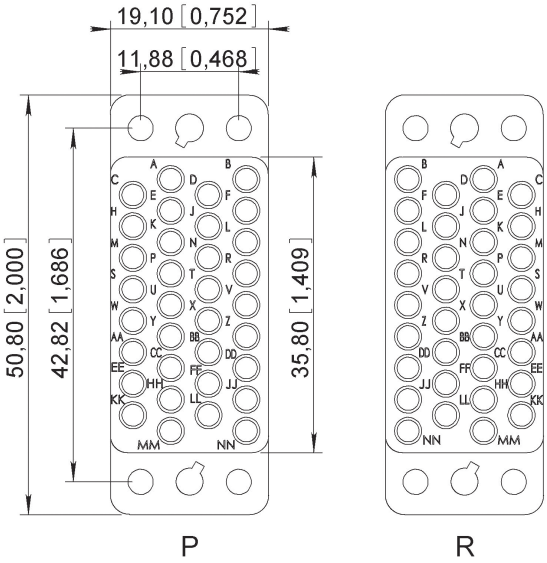

34 CONTACTS

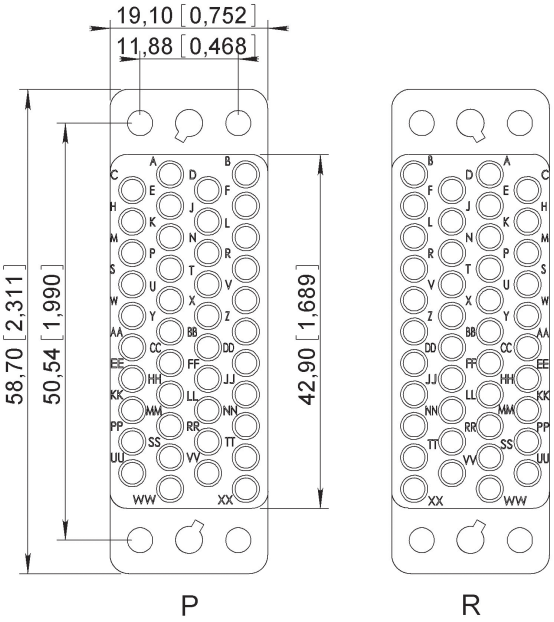

42 CONTACTS

Contacts

CONTACT ARRANGEMENTS

VIEW WIRING BLOCK mm (inch)

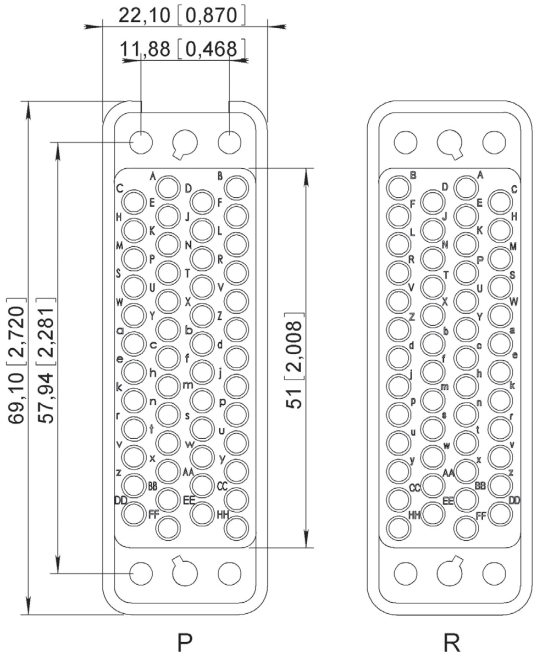

50 CONTACTS

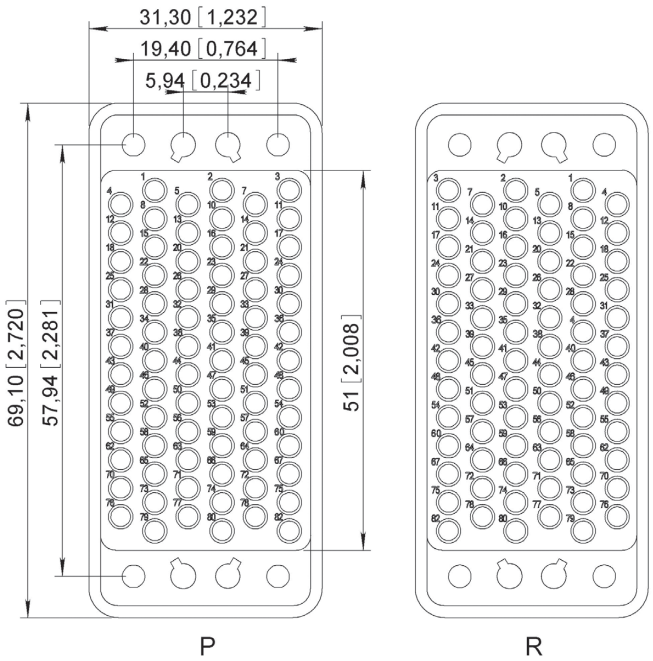

75 CONTACTS

HEIGHT DIMENSIONS mm (inch)

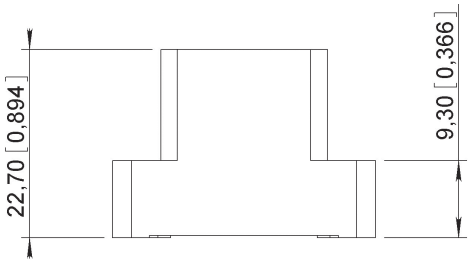

14, 20, 26, 34, 42 CONTACTS

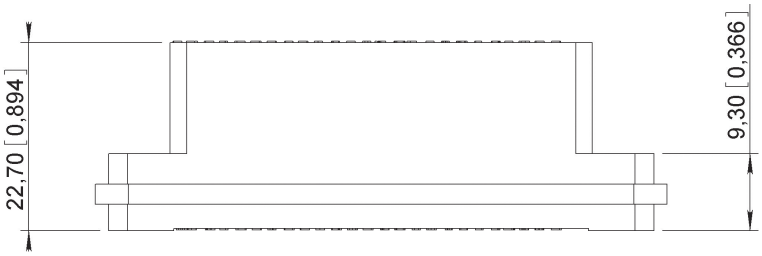

50, 75 CONTACTS

Contacts

RACK GUIDES DIMENSIONS

CONNECTOR BLOCK mm (inch)

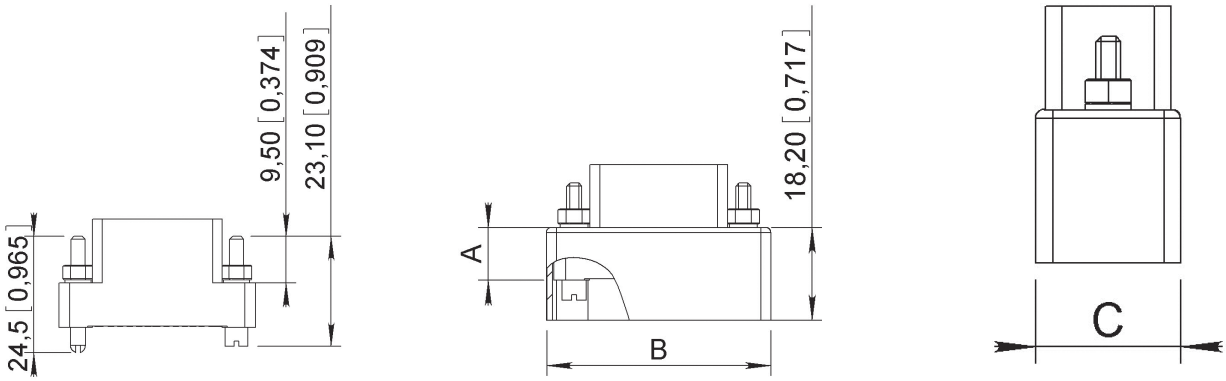

NUMBER OF CONTACTS	A	B		C	
		MALE	FEMALE	MALE	FEMALE
14	10.1 (.397)	34.8 (1.370)	37.2 (1.464)	14.2 (.559)	16.6 (.653)
20		42.2 (1.661)	45.1 (1.775)		
26		44.2 (1.740)	46.1 (1.826)	17.3 (.681)	19.4 (.764)
34	10.3 (.405)	54 (2.126)	56.4 (2.220)	22.2 (.874)	24.6 (.968)
42	Shroud Not Available				
50	10.3 (.405)	72 (2.834)	74.6 (2.937)	25.3 (.996)	27.8 (1.094)
75		72.4 (2.850)	74.7 (2.940)	34.4 (1.354)	37 (1.456)

STRAIN RELIEF CABLE CLAMP (TOP ENTRY) mm (inch)

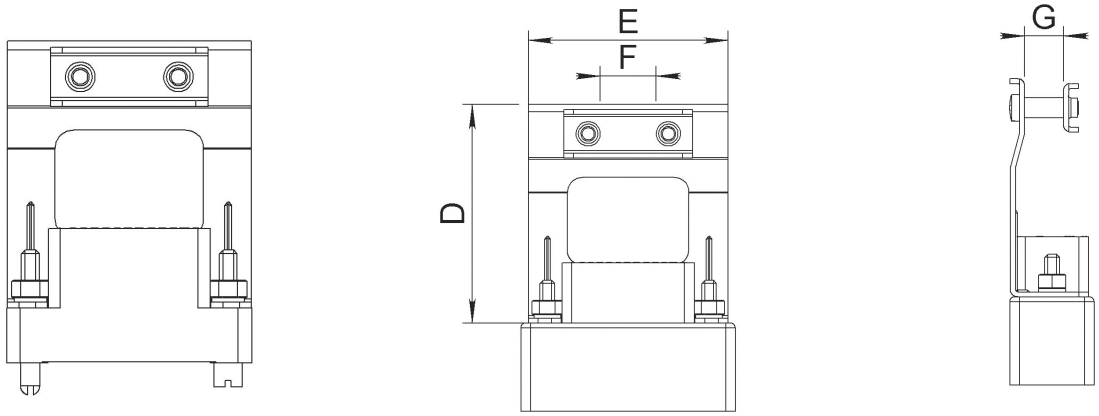

NUMBER OF CONTACTS	D	E	CABLE ENTRY DIMENSIONS	
			F	G MAX
14	44 (1.732)	31.5 (1.240)	5 (.0197)	8 (0.315)
20		39.5 (1.555)	12 (0.472)	
26		41.1 (1.618)		10 (0.394)
34	Cable Clamp Not Available			
42				
50	53 (2.086)	65.6 (2.582)	26 (1.023)	14 (0.551)
75				18 (0.708)

Contacts

RACK GUIDES DIMENSIONS

BACKSHELL TOP ENTRY - mm (inch)

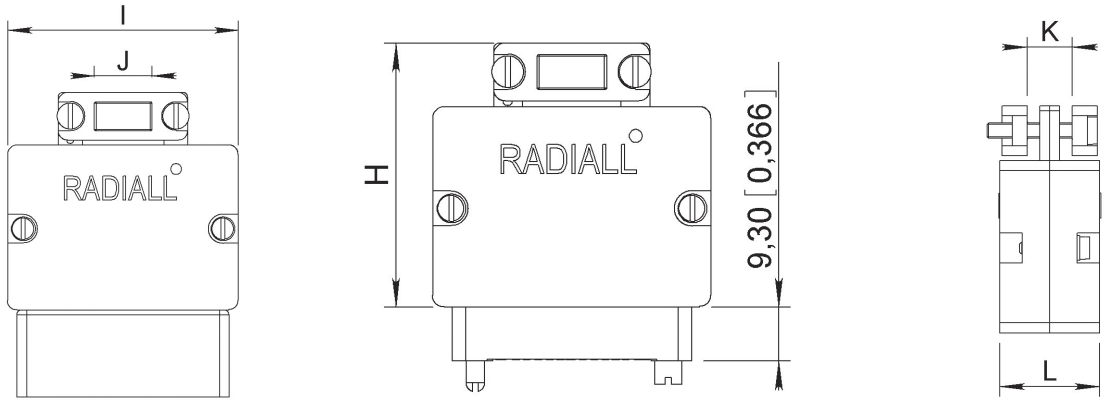

NUMBER OF CONTACTS	H	I	CABLE ENTRY DIMENSIONS		L
			J	K MAX	
14	46 (1.811)	39 (1.535)	7.6 (0.299)	13 (0.512)	17 (0.670)
20		47 (1.850)	15 (0.590)		
26		48.5 (1.909)	17 (0.670)	17 (0.670)	21 (0.827)
34	52.5 (2.067)	53.5 (2.106)	22 (0.866)	20 (0.787)	24 (0.945)
42	47 (1.850)	61 (2.401)	32 (1.260)	12 (0.472)	21.5 (0.846)
50	66.5 (2.618)	68.5 (2.697)	26 (1.023)	21 (0.827)	25 (0.984)
75	47 (1.850)	68 (2.677)	40 (1.575)		30.5 (1.200)

BACKSHELL SIDE ENTRY - AVAILABLE ONLY FOR 75 WAY mm (inch)

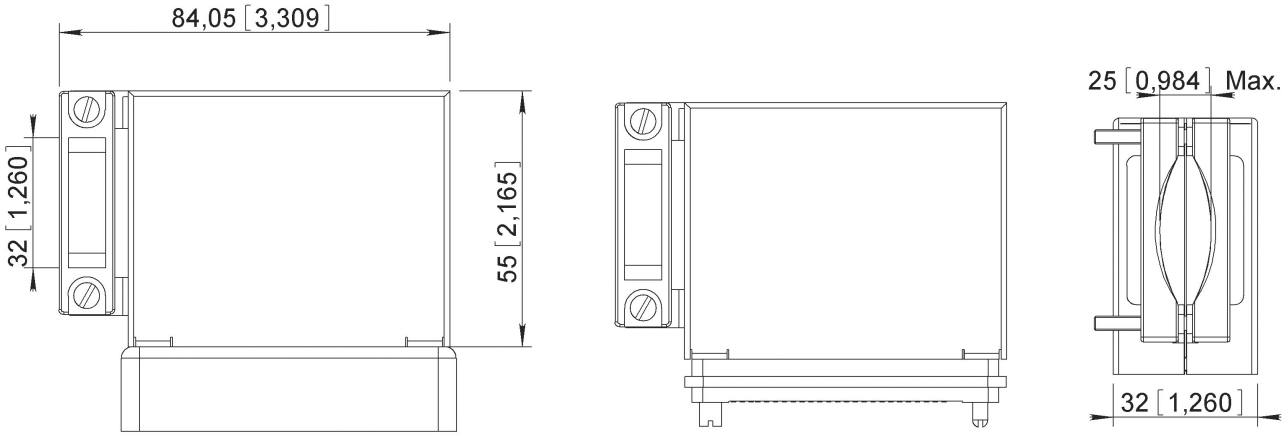

Contacts

FIXED JACKSCREWS DIMENSIONS

CONNECTOR BLOCK mm (inch)

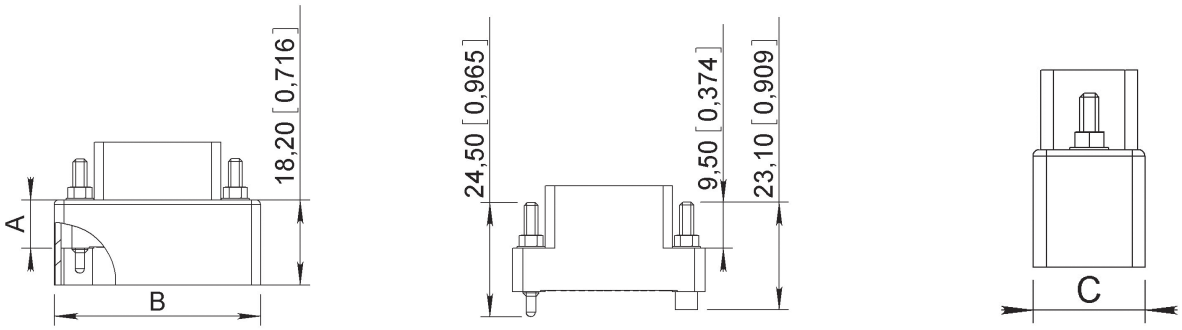

NUMBER OF CONTACTS	A	B		C	
		MALE	FEMALE	MALE	FEMALE
14	10.1 (0.397)	34.8 (1.370)	37.2 (1.464)	14.2 (0.559)	16.6 (0.653)
20		42.2 (1.661)	45.1 (1.775)		
26		44.2 (1.740)	46.4 (1.827)	17.3 (0.681)	19.4 (0.764)
34	10.3 (0.405)	54 (2.126)	56.4 (2.220)	22.2 (0.874)	24.6 (0.968)
42	Shroud Not Available				
50	10.3 (0.405)	72 (2.834)	74.6 (2.937)	25.3 (0.996)	27.8 (1.094)
75		72.4 (2.850)	74.7 (2.940)	34.4 (1.354)	37 (1.456)

STRAIN RELIEF CABLE CLAMP (TOP ENTRY) mm (inch)

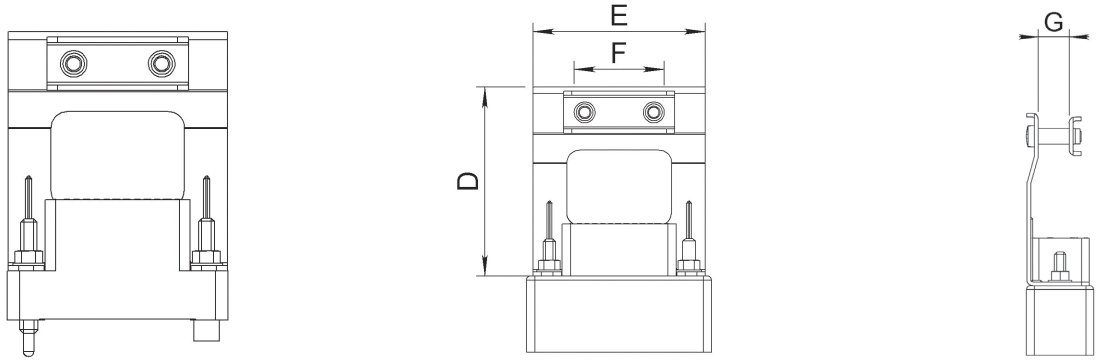

NUMBER OF CONTACTS	D	E	CABLE ENTRY DIMENSIONS	
			F	G MAX
14	44 (1.732)	31.5 (1.240)	5 (0.197)	8 (0.315)
20		39.5 (1.555)	12 (0.472)	
26		41.1 (1.618)		10 (0.394)
34	Cable Clamp Not Available			
42				
50	53 (2.086)	65.6 (2.582)	26 (1.023)	14 (0.551)
75				18 (0.708)

Contacts

FIXED JACKSCREWS DIMENSIONS

BACKSHELL TOP ENTRY - mm (inch)

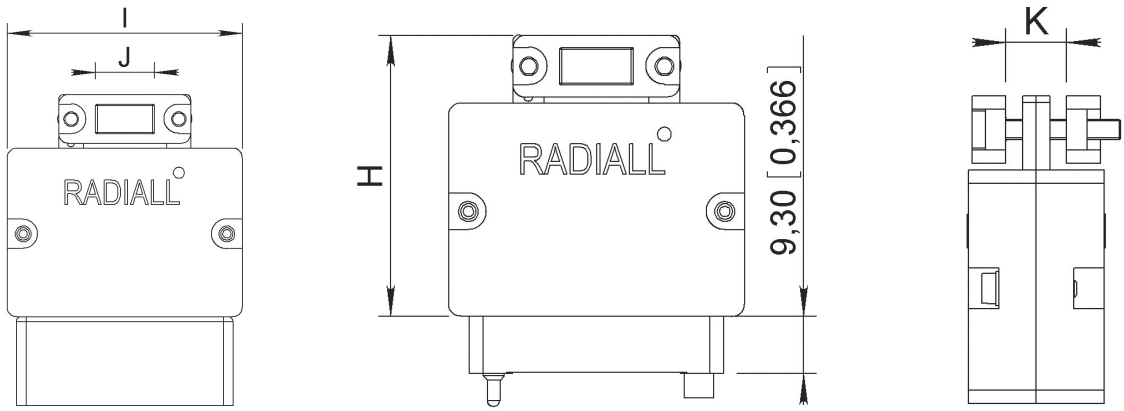

NUMBER OF CONTACTS	H	I	CABLE ENTRY DIMENSIONS		L
			J	K MAX	
14	46 (1.811)	39 (1.535)	7.6 (0.299)	13 (0.512)	17 (0.670)
20		47 (1.850)	15 (0.590)		
26		48.5 (1.909)	17 (0.670)	17 (0.670)	21 (0.827)
34	52.5 (2.067)	53.5 (2.106)	22 (0.866)	20 (0.787)	24 (0.945)
42	47 (1.850)	61 (2.401)	32 (1.260)	12 (0.472)	21.5 (0.846)
50	66.5 (2.618)	68.5 (2.697)	26 (1.023)	21 (0.827)	25 (0.984)
75	47 (1.850)	68 (2.677)	40 (1.575)		30.5 (1.200)

BACKSHELL SIDE ENTRY - AVAILABLE ONLY FOR 75 WAY mm (inch)

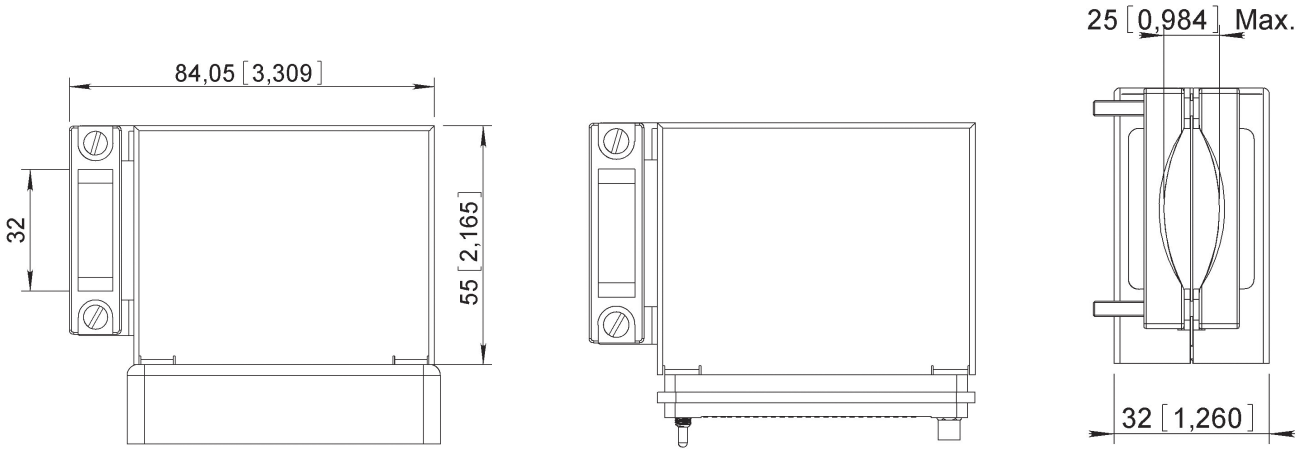

Contacts

ROTATING JACKSCREWS DIMENSIONS

CONNECTOR BLOCK mm (inch)

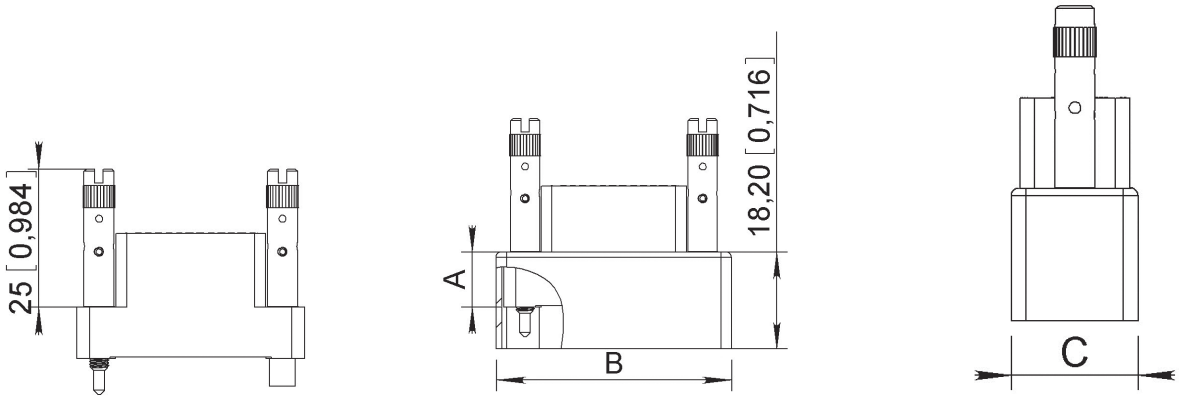

NUMBER OF CONTACTS	A	B		C	
		MALE	FEMALE	MALE	FEMALE
14	10.1 (0.397)	34.8 (1.370)	37.2 (1.464)	14.2 (0.559)	16.6 (0.653)
20		42.2 (1.661)	45.1 (1.775)		
26		44.2 (1.740)	46.4 (1.827)	17.3 (0.681)	19.4 (0.764)
34	10.3 (0.405)	54 (2.126)	56.4 (2.220)	22.2 (0.874)	24.6 (0.968)
42	Shroud Not Available				
50	10.3 (0.405)	72 (2.834)	74.6 (2.937)	25.3 (0.996)	27.8 (1.094)
75		72.4 (2.850)	74.7 (2.940)	34.4 (1.354)	37 (1.456)

STRAIN RELIEF CABLE CLAMP (TOP ENTRY) mm (inch)

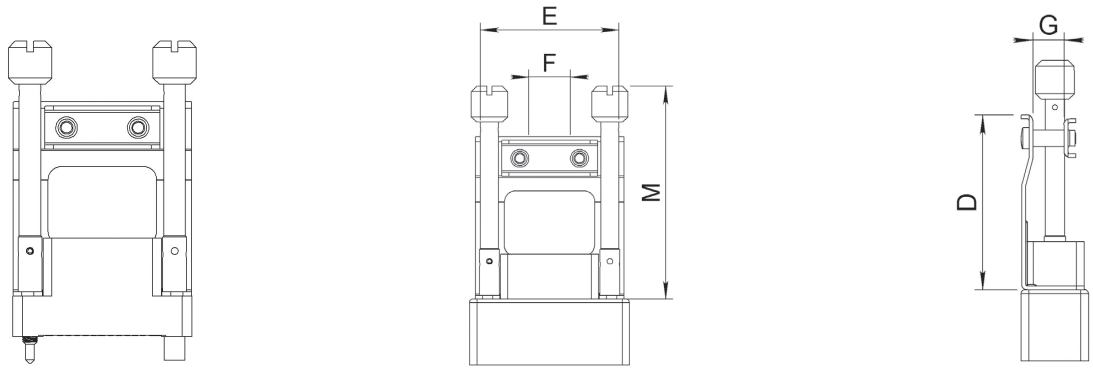

NUMBER OF CONTACTS	D	E	M	CABLE ENTRY DIMENSIONS	
				F	G MAX
14	44 (1.732)	31.5 (1.240)	60 (2.362)	5 (0.197)	8 (0.315)
20		39.5 (1.555)		12 (0.472)	
26		41.1 (1.618)			10 (0.394)
34	Cable Clamp Not Available				
42					
50	53 (2.086)	65.6 (2.582)	64 (2.519)	26 (1.023)	14 (0.551)
75					18 (0.708)

Contacts

ROTATING JACKSCREWS DIMENSIONS

BACKSHELL TOP ENTRY - mm (inch)

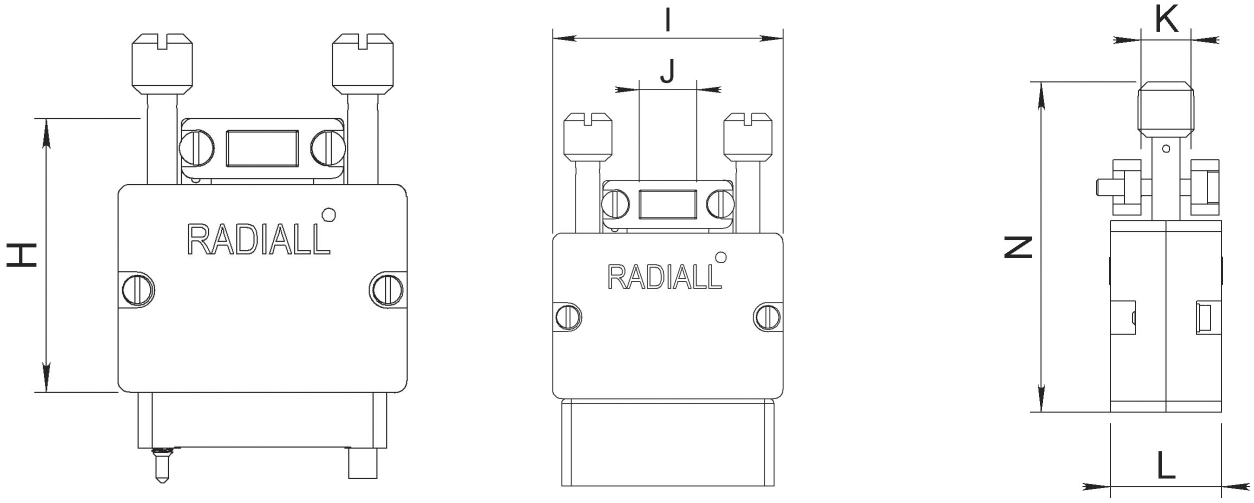

NUMBER OF CONTACTS	H	I	CABLE ENTRY DIMENSIONS		L	N
			J	K MAX		
14	46 (1.811)	39 (1.535)	7.6 (.299)	13 (.512)	17 (.670)	60 (2.362)
20		47 (1.850)	15 (.590)			
26		48.5 (1.909)	17 (.670)	17 (.670)	21 (.827)	
34	52.5 (2.067)	53.5 (2.106)	22 (.866)	20 (.787)	24 (.945)	64 (2.519)
42	47 (1.850)	61 (2.401)	32 (1.260)	12 (.472)	21.5 (.846)	
50	66.5 (2.618)	68.5 (2.697)	26 (1.023)	21 (.827)	25 (.984)	78 (3.071)
75	47 (1.850)	68 (2.677)	40 (1.575)		30.5 (1.200)	

BACKSHELL SIDE ENTRY - AVAILABLE ONLY FOR 75 WAY mm (inch)

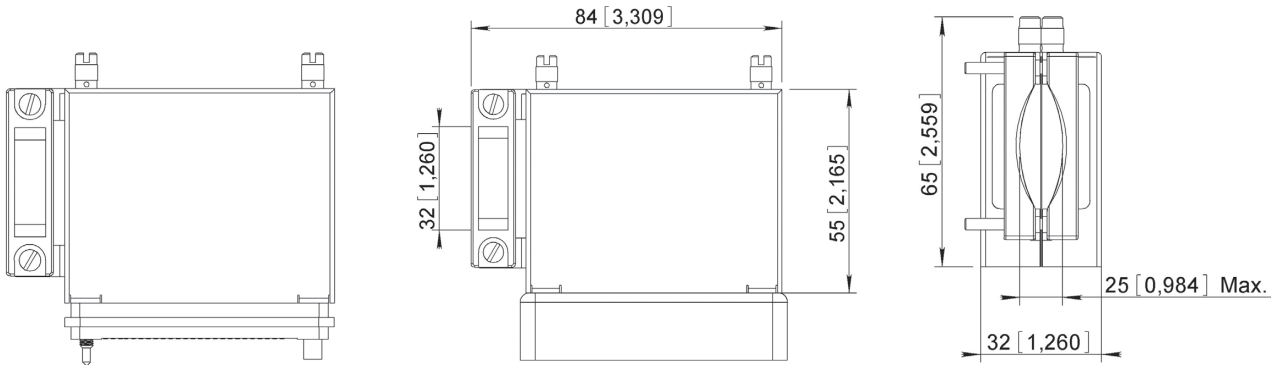

Contacts

BLOCK 104 CONTACTS

CENTRAL GUIDE	R TYPE-RACK GUIDES				PART NUMBER
	A	B	C	D	
Mates with All the Blocks P	No Guides				690571
	Female	Male	Male	Female	690570
	Female	-	-	Female	690572
	Female	Female	Female	Female	690573

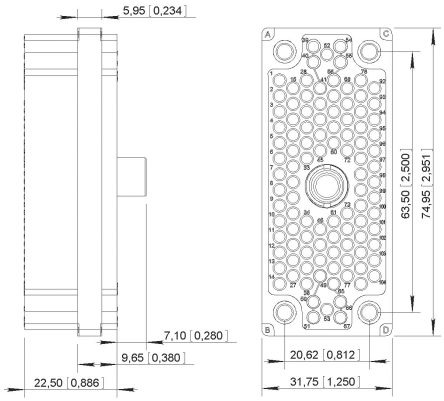

VIEW WIRING SIDE MM (INCH)

CENTRAL GUIDE	P TYPE-RACK GUIDES				PART NUMBER
	A	B	C	D	
Central Rack Guide	No Guides				690481
	Male	Female	Female	Male	690480
	Male	-	-	Male	690482
	Male	Male	Male	Male	690483
Sunken Hex. Nut 4 A/F	No Guides				690471
	Male	Female	Female	Male	690470
	Male	-	-	Male	690472
	Male	Male	Male	Male	690473
Central Jackscrew	No Guides				690476
	Male	Female	Female	Male	690475
	Male	-	-	Male	690477
	Male	Male	Male	Male	690478

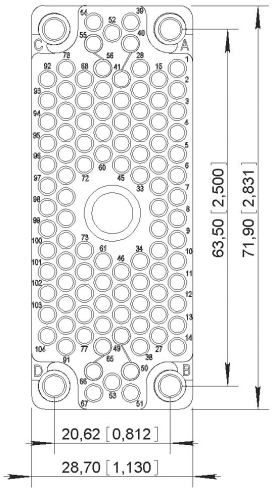

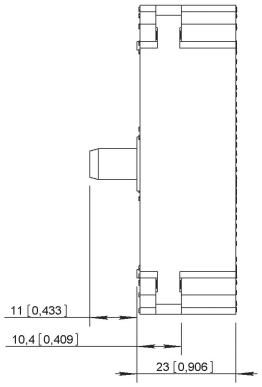

RACK GUIDE

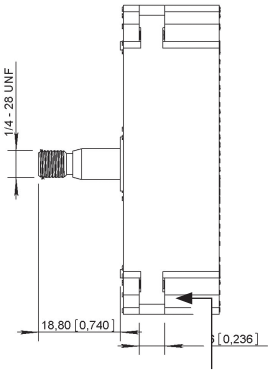

SUNKEN HEX. NUT

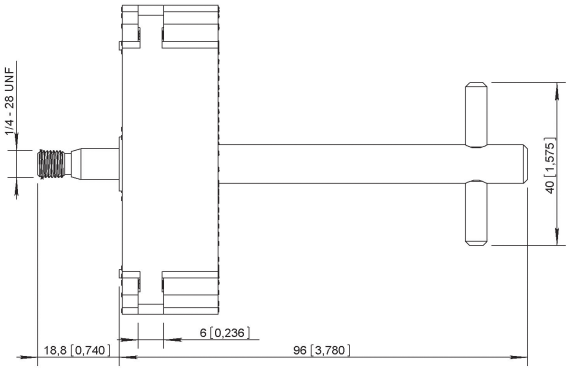

CENTRAL JACKSCREW

BACKSHELL TOP ENTRY MM (INCH)

Contacts

Detailed view of the connector with shroud mounted on a panel.

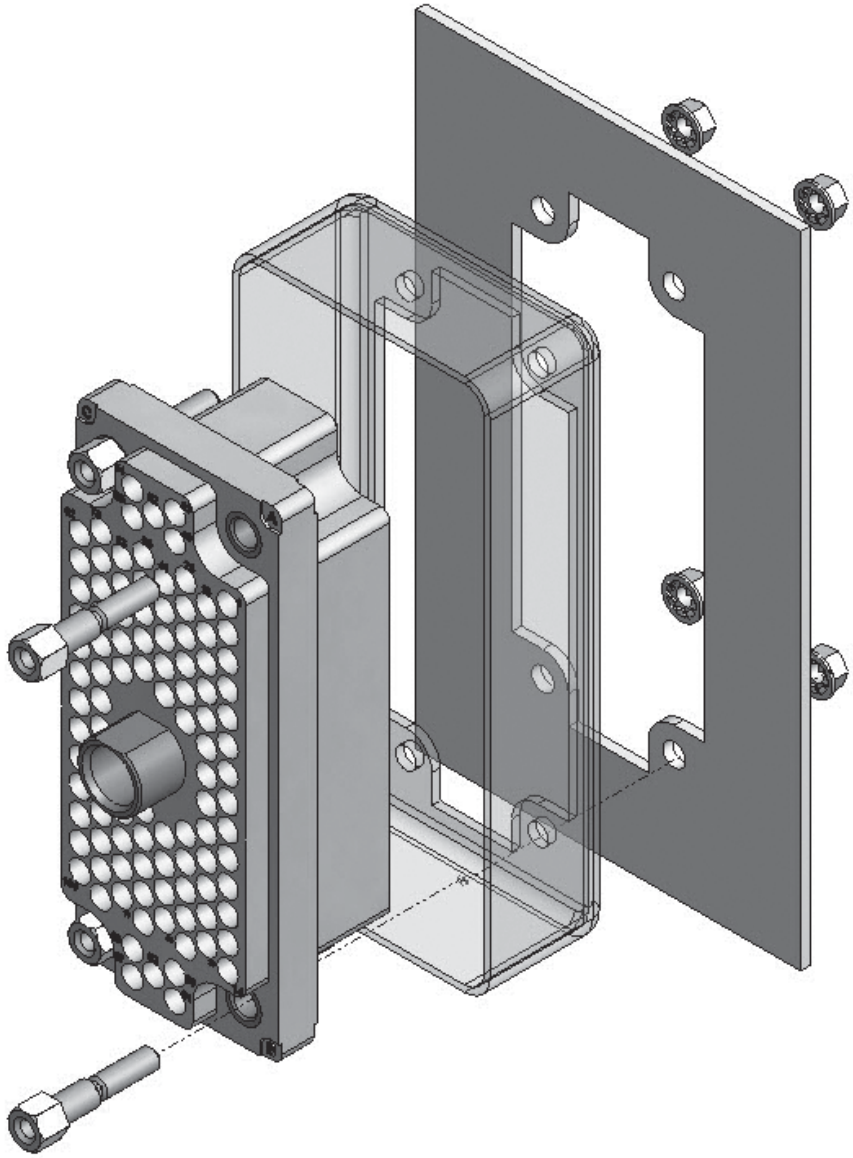

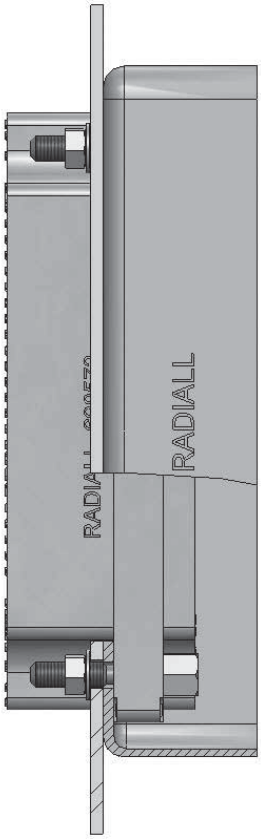

VIEW ONCE ALL ASSEMBLED

Contacts

GUIDES TO MOUNT IN POSITIONS A, B, C, D

FEMALE P/N 690950 **MALE P/N 690960**

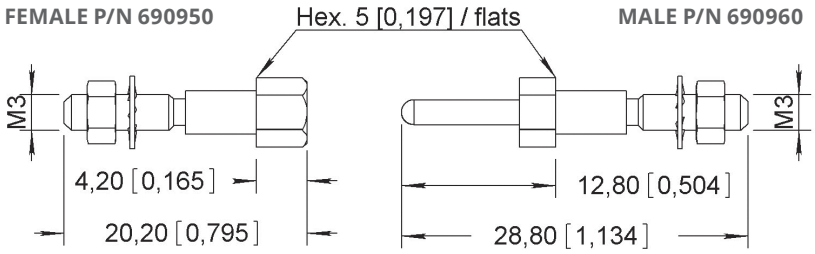

SHROUDS

FEMALE SHROUD-USE ONLY THIS REFERENCE TO ORDER WITHOUT POLARIZING CODE

POLARIZATION CODE	POSITION
110	1
120	3
130	5
140	7
210	1 + 3
220	3 + 5
230	5 + 7
240	1 + 5
250	3 + 7
260	1 + 7

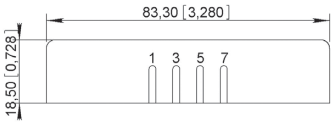

SHROUD FEMALE

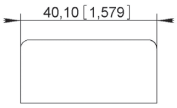

REF: 690 992

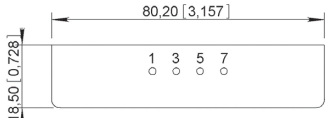

SHROUD MALE

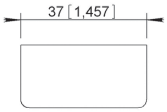

REF: 690 991

MALE SHROUD-USE ONLY THIS REFERENCE TO ORDER WITHOUT POLARIZING CODE

To order with polarizing: add the polarization code at the end of the shroud part number, see example: 690991110.

BACKSHELL–CAST ALUMINIUM PAINTED BLACK ASSEMBLY KIT

ENTRY	CABLE CLAMP MAX cm (inch)	L	H	PART NUMBER
1 entry 45°	7.8 (3.1)	70 (27.6)	71 (28)	690971
2 entries 45°	15.6 (6.1)			690972
1 entry 0°	5.3 (2.1)	55 (21.7)	66 (26)	690973
2 entries 0°	10.6 (4.2)			690974
1 entry 90°	5.3 (2.1)	65 (25.6)	57 (22.4)	690973
2 entries 90°	10.6 (4.2)			690974

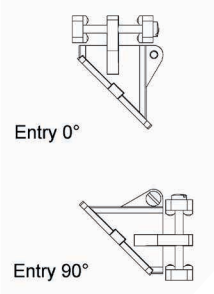

SPARE PARTS (1 OR 2 ENTRY ROTATION)

DESCRIPTION	PART NUMBER
Body (In 2 Parts)	690977
Entry 0–90°	690980
Entry 45°	690979
Cap	690978

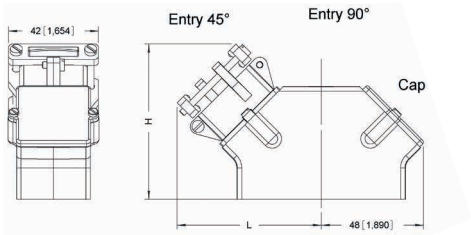

Contacts

BLOCK 158 CONTACTS

R TYPE		GUIDES SUPPLIED UNMOUNTED	
CENTRAL GUIDE	WITHOUT GUIDES	4 FEMALE	2 MALE/ 2 FEMALE
Mates with All Blocks P	690686	690670	690680

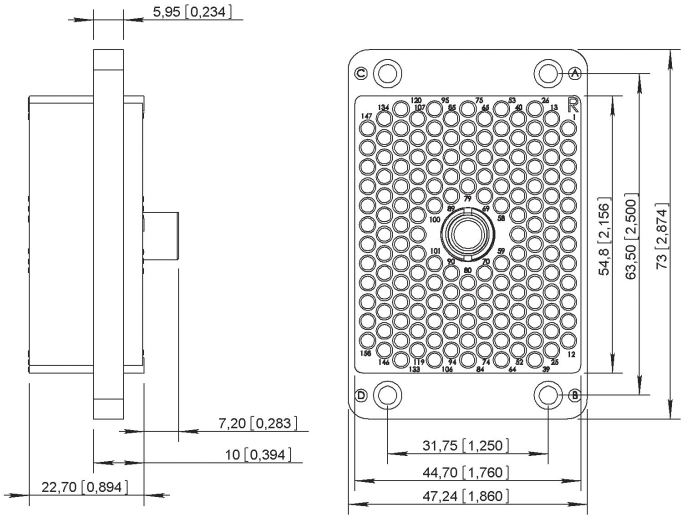

VIEW WIRING SIDE MM (INCH)

P TYPE		GUIDES SUPPLIED UNMOUNTED	
CENTRAL GUIDE	WITHOUT GUIDES	4 FEMALE	2 MALE/ 2 FEMALE
Central Rack Guide	690681	690678	690683
Sunken Hex. 4 A/F	690671	690679	690684
Central Jackscrew	690676	690677	690682

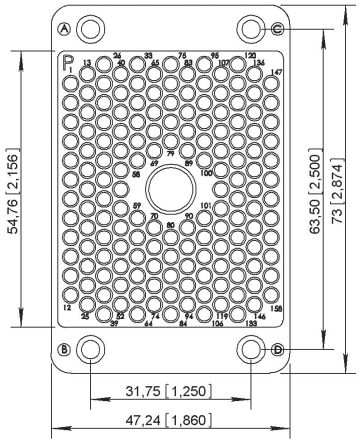

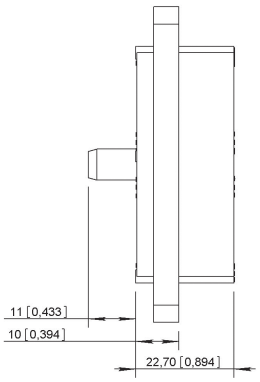

RACK GUIDE

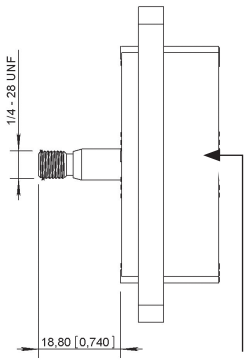

SUNKEN HEX. NUT

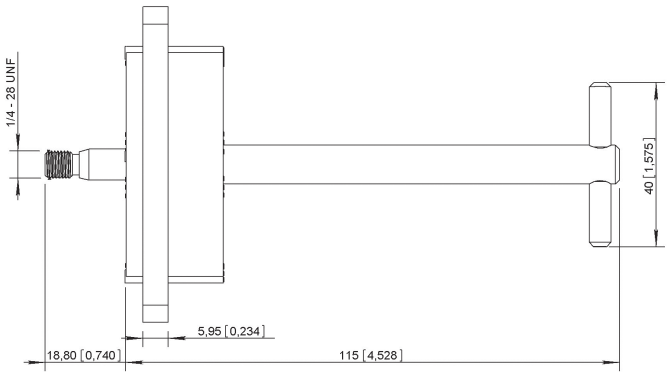

CENTRAL JACKSCREW

Contacts

GUIDES TO MOUNT IN POSITIONS A, B, C, D - mm (inch)

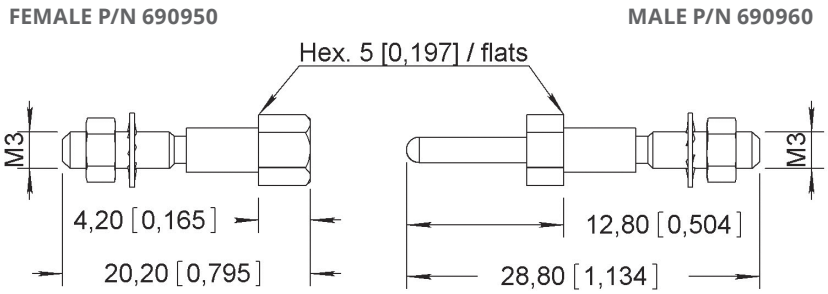

BACKSHELL P/N 690985 - mm (inch)

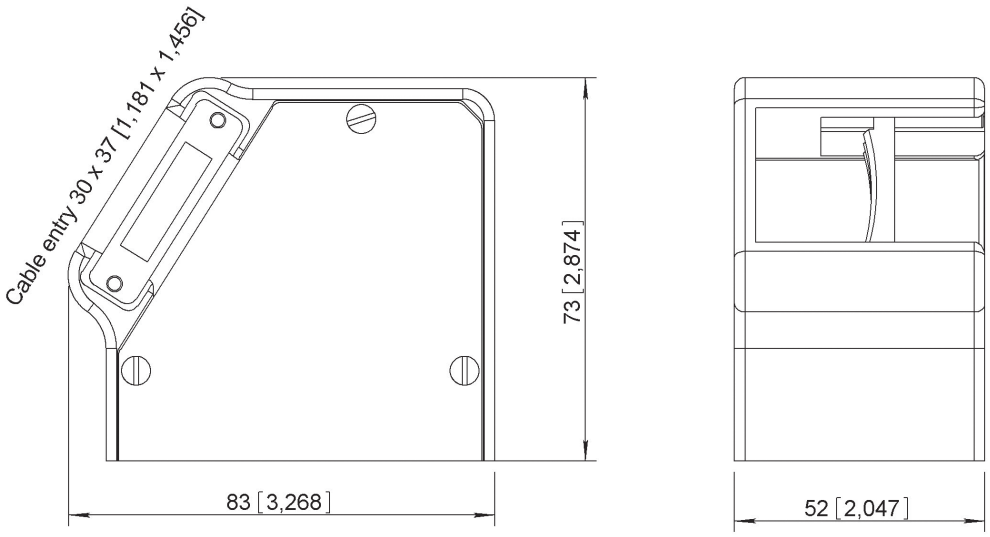

Contacts

BLOCK 208 CONTACTS

POLARIZING POSITIONS	R TYPE	
	GUIDES SUPPLIED UNMOUNTED	
	4 FEMALE	2 MALE/2 FEMALE
N	690768001	690778004
R	690768002	690778007
Z	690768003	690778002
Y	690768004	690778003
X	690768005	690778001
W	690768006	690778005

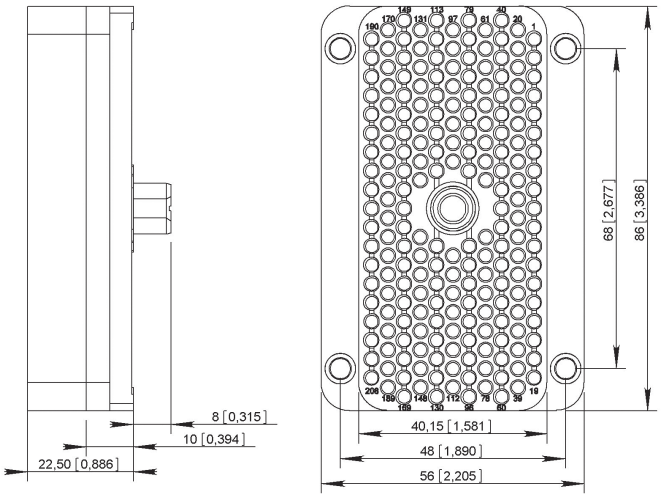

VIEW WIRING SIDE mm (inch)

POLARIZING POSITIONS	P TYPE	
	GUIDES SUPPLIED UNMOUNTED	
	4 MALE	2 MALE/2 FEMALE
N	690769001	690767001
R	690769002	690767002
Z	690769003	690767003
Y	690769004	690767004
X	690769005	690767005
W	690769006	690767006

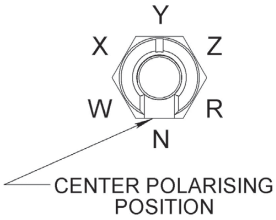

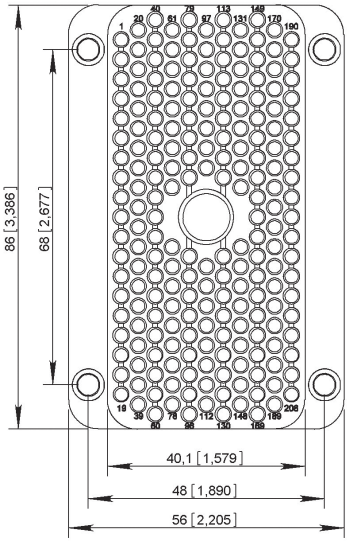

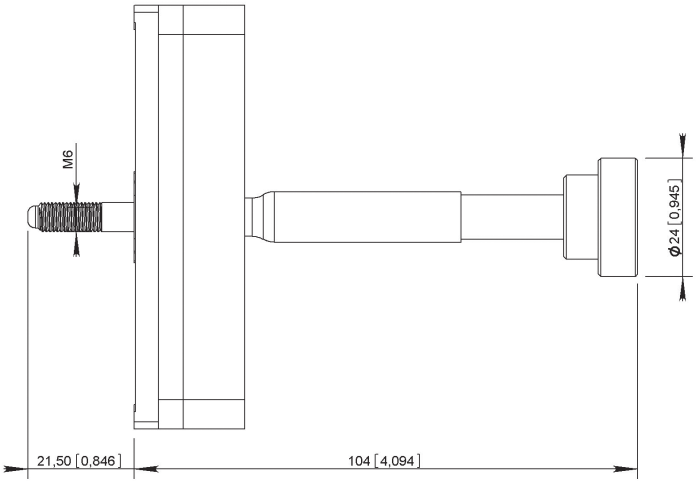

Contacts

GUIDES TO MOUNT IN POSITIONS A, B, C, D - mm (inch)

FEMALE P/N 690958 **MALE P/N 690968**

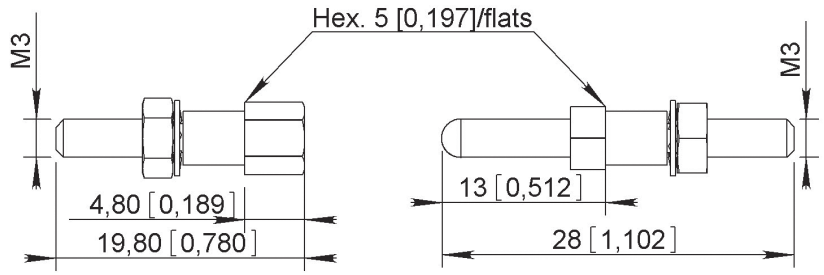

BACKSHELL P/N 690982 - mm (inch)

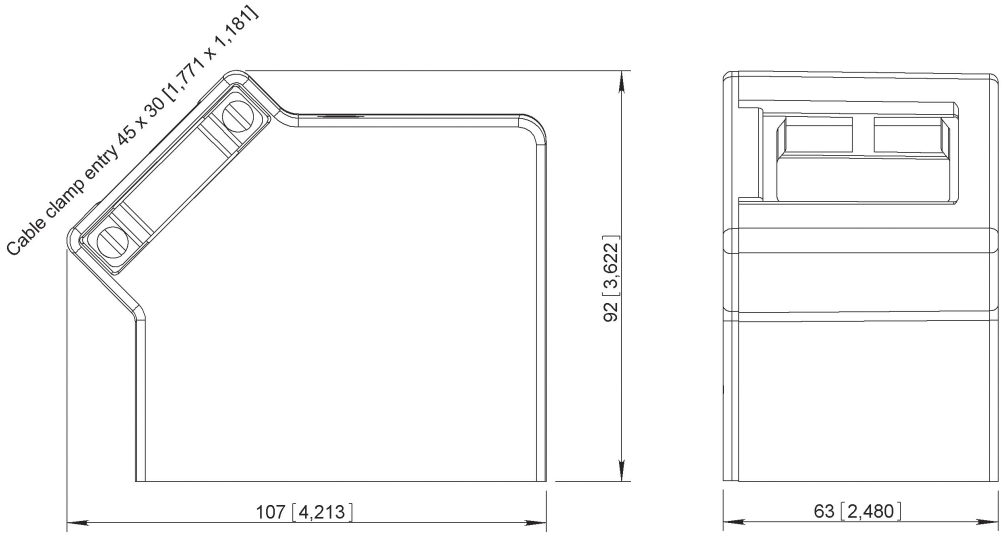

CONTACTS

Pins and/or sockets for equipment wire, twisted pairs and coaxial cable can be housed in either plug or receptacle giving a multitude of connection possibilities.

Many contact arrangements available: 14 -20-26-34-42-50-75-104-158 and 208 ways.

The signal contacts size 16 (pin Ø 1.58mm) are for crimping to AWG 16 to 28.

Contacts for wire wrapping are available with tails 0.6 x 0.6 mm (0.024x0.024 inch) or 1.2 x 1.2mm (0.047 x 0.047 inch) square. The coaxial contacts are for crimping to 2 mm and 2.6 mm coaxial cables and AWG 24 to 30 twisted pairs.

For all other contact terminations: consult us

No tool is necessary for the insertion, the extraction is from the rear using an extraction tool introduced by the mating face of the connector.

FRONT RELEASE & FRONT REMOVABLE CONTACTS

In order to facilitate the junction of MMC series connectors with a flexible or steady printed circuits, Radiall created a range of solder tail and wire wrap front release contacts.

This eases the replacement of a damaged contact without rewiring the set.

These size 16 contacts fit with all standard MMC connectors cavities from 14 to 208 which allow to mix them on a same connector with micro-coaxial contacts and crimping contacts.

TYPE	CONTACTS ARRANGEMENTS		CONTACT [1]		REPLACEMENT CONTACT [2]	
			PIN	SOCKET	PIN	SOCKET
Mini-Wrapping 0.6 (.024) Flats 2 Wraps	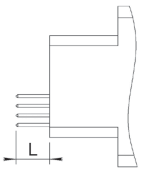	L=10.6 (.417)	690220	690320	690220001	690320001
Mini-Wrapping 0.6 (.024) Flats 3 Wraps		L=16 (.630)	690221	690321	690221001	690321001
PC Tail Ø 0.65mm (.026)		L=6.2 (.244)	690222	690322	690222001	690322001

INSTALLATION AND EXTRACTION OF FR/FR CONTACTS.

CONTACT INSTALLATION

1. Insert the contact fitted with the retention clip through the mating face and push insertion tool 282501.

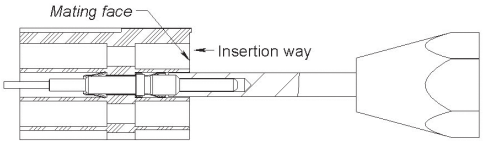

2. Introduce the sleeve by the rear face with tool 282502 and push it until it flushes with the insulator.

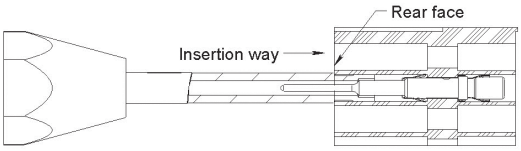

CONTACT REPLACEMENT

Extraction: insert the extraction tool 282917 by the mating face into the cavity of the contact to be replaced. Push it until it butts against the contact shoulder. Maintain the pressure on piston and pull on body tool to extract the contact. To free the contact release pressure on piston.

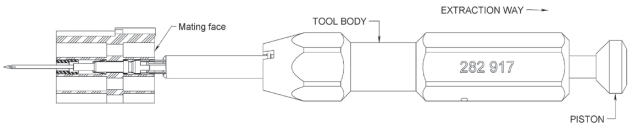

Installation of a new contact without retention clip: insert the contact through the mating face, push it with tool 282501 until contact snaps in place.

Notes

1. Contact with retention clip and anti-rotation sleeve, must be used for the original or initial equipment of the connectors.
2. Contact without retention clip and anti-rotation sleeve for the replacement of damaged contacts.

Contacts

EQUIPMENT SIGNAL CONTACTS

FRONT RELEASE/REAR RELEASE CRIMP CONTACTS

CABLES			CONTACTS		POSITIONER	CRIMPING TOOL	POSITION ON CRIMP TOOL	EXTRACTION TOOL
AWG SIZE	SECTION IN mm² (sq.in)	Ø MAX. ON SLEEVE mm (inch)	PIN	SOCKET				
16 18 20	1.34 (0.053) 0.93 (0.037) 0.60 (0.024)	3.10 (0.122)	690200	690300	282975	282291 M22520/1.01	6 5 4	282920
16 18 20	1.34 (0.053) 0.93 (0.037) 0.60 (0.024)	3.10 (0.122)	690201	690301			6 5 4	
20 22 24	0.60(0.024) 0.38 (0.015) 0.22 (0.009)	2.20 (0.086)	690215	690315	282976		4 3 2	282920
24 26 28	0.22 (0.009) 0.14 (0.006) 0.093 (0.004)	1.60 (0.063)	690235	690335			4 2 2	

WIRE WRAP CONTACTS

TYPE	CONTACTS ARRANGEMENTS		CONTACTS		TOOLS	
			PIN	SOCKET	INSERTION	EXTRACTION
Mini-Wrapping Ø 0.6 (0.024) Flats 2 Wraps	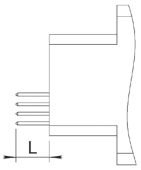	L=10.6 (0.417)	690241	690341	282921	282920
Wrapping Standard Ø 1.2 (0.047) Flats 3 Wraps		L=19.5 (0.767)	690240	690340		

Contacts

TWISTED PAIR CRIMP CONTACTS

CABLES				TOOLS [3]				CONTACTS & WIRING INSTRUCTIONS [4]	
AWG SIZE		SECTION IN mm² (sq.in)	Ø MAX. ON INSULATOR	CENTER CONTACT		OUTER CONTACT		SOCKET [1]	PIN [2]
				POSITION ON CRIMPING TOOL [5]	POSITIONER	CIMPING TOOL	POSITIONER		
24	Stranded Wire Cable	0.22 (0.009)	0.96 (0.038)	2	282981/M22520/2.04	282292 /M22520/4.01	282973/M22520/4.02	690070 B	690170 B
26	Stranded Wire Cable	0.14 (0.006)	0.84 (0.033)	2				690060 A	690160 A
28		0.093 (0.004)	0.73 (0.029)	1					
30		0.055 (0.002)	0.66 (0.026)	1					
26	Single Wire Cable	0.12 (0.005)	0.85 (0.033)	3					
28		0.08 (0.003)	0.67 (0.026)	2					
30		0.05 (0.002)	0.58 (0.023)	1					
26	Stranded Wire Cable	0.14 (0.006)	0.84 (0.033)	2				690061 A	690161 A
28		0.093 (0.004)	0.73 (0.029)	1					
26	Single Wire Cable	0.12 (0.005)	0.85 (0.033)	3					
28		0.08 (0.003)	0.67 (0.026)	2					
30	Stranded Wire Cable	0.055 (0.002)	0.66 (0.026)	1				690062 A	690162 A
30	Single Wire Cable	0.05 (0.002)	0.58 (0.023)	1					

Notes

1. Body female contact/center male contact
2. Body male contact/center female contact
3. Extraction tool for all twisted pair contacts P/N 282920
4. Wiring instructions on pages 8-29 to 8-32
5. Crimping tool for all 282281/M22520/2.01

Contacts

COAXIAL CRIMP CONTACTS

CABLES			TOOLS [3]				CONTACTS & WIRING INSTRUCTIONS [4]	
CABLE REFERENCE	IMPEDANCE Ω	OUTER DIAMETER	CENTER CONTACT		OUTER CONTACT		SOCKET [1]	PIN [2]
			CRIMP TOOL	POSITIONER	CRIMP TOOL	POSITIONER		
RG178/U RG196/U KX21	50	2 (0.079)	282281 M22520/2.01	282981 M22520/2.04	282292 M22520/4.01	282973 M22520/4.02	690020 C	690120 C
KX3A RG316/U KX22	50	2.54 (0.100) ± 0.13 (0.005)					690040 D	690140 D
RG179/U	75							

Notes

1. Body female contact/center male contact
2. Body male contact/center female contact
3. Extraction tool for all twisted pair contacts P/N 282920
4. Wiring instructions on pages 8-29 to 8-32

Contacts

PANEL CUT-OUT

NUMBER OF CONTACTS	A	B	C	MAX. PANEL THICKNESS
14	12.4 (0.488)	23.8 (0.937)	20.8 (0.819)	6 (0.236)
20	12.4 (0.488)	31.7 (1.248)	28.7 (1.130)	
26	15.7 (0.618)	33.3 (1.311)	29.2 (1.150)	

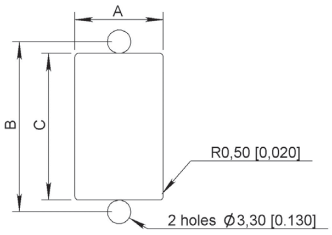

NUMBER OF CONTACTS	A	B	C	D	E	F	MAX. PANEL THICKNESS
34	19.8 (0.779)	11.9 (.468)	6.3 (0.248)	49.3 (1.940)	42.8 (1.685)	36.6 (1.441)	6 (0.236)
42				56.9 (2.240)	50.5 (1.988)	43.7 (1.720)	
50				64.3 (2.531)	57.9 (2.279)	51.6 (2.031)	
75	29 (1.141)	19.4 (0.764)	14.2 (0.559)				
104	29.3 (1.153)	20.6 (0.811)	12.7 (0.500)	72.5 (2.854)	63.5 (2.500)	55.6 (2.189)	5.5 (0.216)

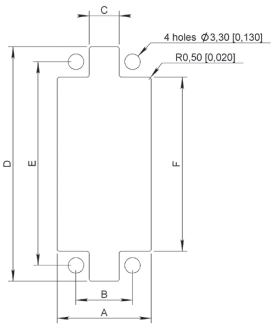

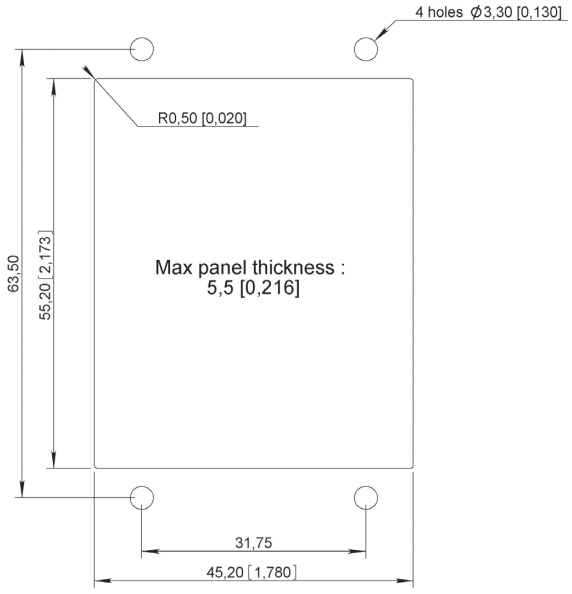

158 CONTACTS

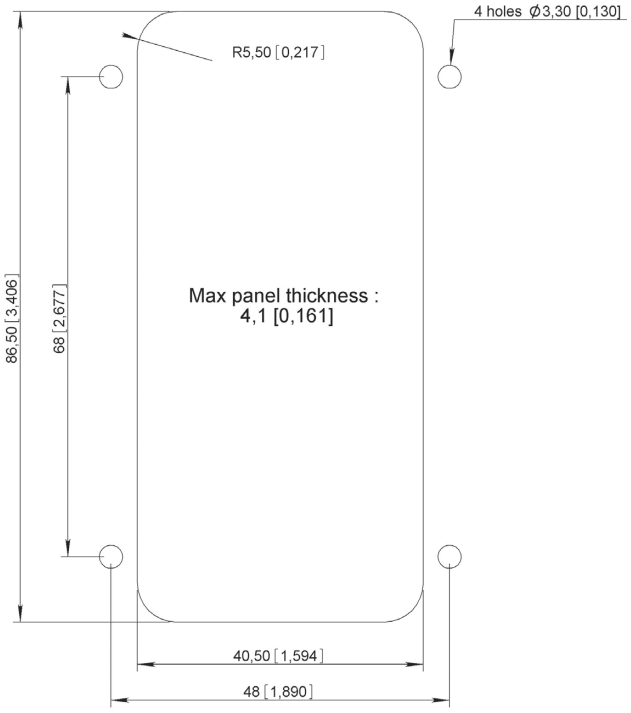

208 CONTACTS

Contacts

SPARE PARTS

Jackscrew and rack guide selection table

CABLES			NUMBER OF CONTACTS						
			14	20	26	34	42	50	75
Rack Guides	Without backshell	Male	690962						
		Female	690952						
	With backshell	Male	690963				690963		
		Female	690963				690963		
Fixed Guides	Without backshell	Male	690961						
		Female	690951						
	With backshell	Male	690964				690961		
		Female	690954				690951		
Rotating jackscrews	Without backshell	Male	690965						
		Female	690955						
	With or without backshell	Male	690966			690949		690967	
			-					For 75 Contacts 690967001 Side Entry	
		Female	690956		690939				
			-					For 75 Contacts 690957001 Side Entry	

Contacts

SPARE PARTS

INSULATOR BLOCKS ONLY

NUMBER OF CONTACTS	BLOCK	
	TYPE P	TYPE R
14	690401	690501
20	690411	690511
26	690421	690521
34	690431	690531
42	690441	690541
50	690451	690551
75	690461	690561

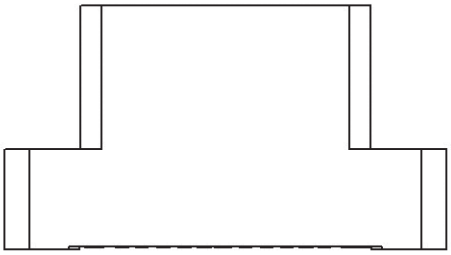

BACKSHELLS

When ordering backshells separately, do not forget to order the appropriate guides or jackscrews (refer to previous page for part numbers.)

NUMBER OF CONTACTS	BACKSHELL REFERENCE
14	690905
20	690908
26	690911
34	690914
42	690917
50	690920
75	Type P 690923
	Type R 690924

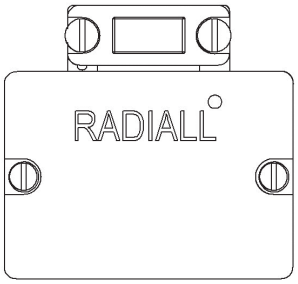

POLARIZATION CODE	POSITION
110	1
120	3
130	5
140	7
210	1 + 3
220	3 + 5
230	5 + 7
240	1 + 5
250	3 + 7
260	1 + 7

SHROUDS

Male shroud is to be mounted on insulator block P and female shroud on insulator block R.

Polarizing is to be positioned next to cavity 1 or A of the insulator block.

To order without polarization just use the six digits in the following table. To include polarization add the 3 digits suffix following the 6 digits part number. E.G: 690943120 (position 3).

NUMBER OF CONTACTS	SHROUDS	
	MALE	FEMALE
14	690940	690930
20	690941	690931
26	690942	690932
34	690943	690933
42	Not Available	
50	690945	690935
75	690946	690936

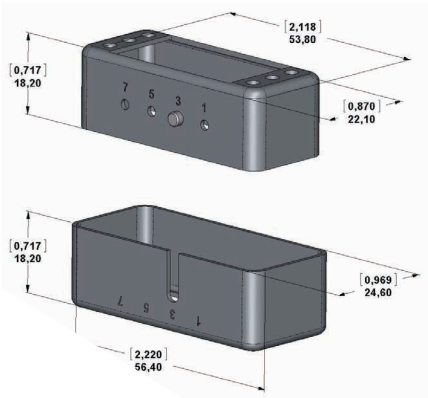

Contacts

WIRING INSTRUCTIONS

TWISTED PAIR CONTACT

WIRING INSTRUCTIONS A

CONTACT REF:	WIRE SIZES:
690060	AWG 26
690160	AWG 28
690061	AWG 30
690161	
690062	
690162	

BODY | CENTER CONTACT | INSULATOR BUSH | ADAPTER | FERRULE

1-WIRE STRIPPING

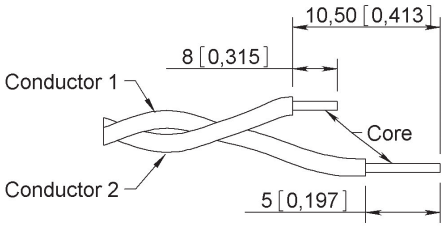

SOCKET CONTACT

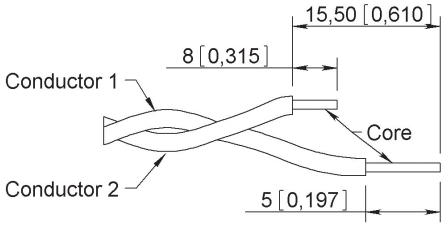

PIN CONTACT

2–WIRING INSTRUCTIONS

- Slide the ferrule over the twisted pair cable
- Following the type of contact, strip the 2 conductors to the shown dimensions here above
- Slide adaptor over conductor ①
- Slide insulator bush over conductor ①
- Put the core of the cable ① into the center contact (pin or socket) until it butts against the insulator bush
- Engage the assembly (cable + center contact) into the positioner of the crimping tool, and crimp center contact according to setting instructions page 8-24
- Engage the center contact into the body, with reasonable force push home. Check the dimensional position, following type of centre contact (pin/socket)
- Slide the adaptor on to the body up to the shoulder
- Place the core of conductor ② under the adaptor tab, and slide core into the helical slot
- Slide the ferrule over the adapter up to the shoulder of the body
- Engage the assembly into the positioner of the crimping tool, then crimp according to setting instructions, page 8-24

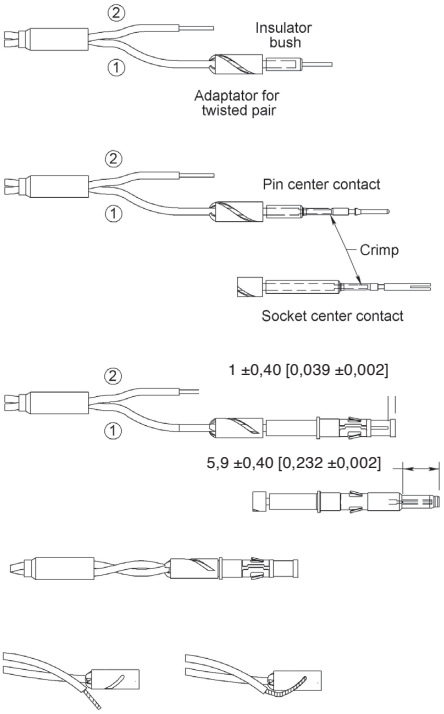

TWISTED PAIR CONTACT

CABLING INSTRUCTIONS B

CONTACT REF: 690070 WIRE SIZES: AWG 24
690170

BODY CENTER CONTACT INSULATOR BUSH ADAPTER FERRULE

1-WIRE STRIPPING

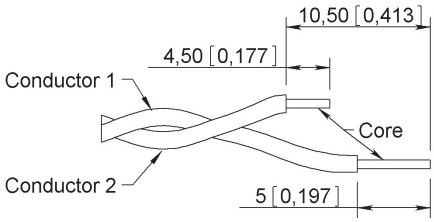

SOCKET CONTACT

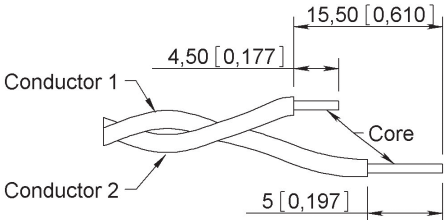

PIN CONTACT

2–WIRING INSTRUCTIONS

- Slide the ferrule over the twisted pair cable
- Following the type of contact, strip the 2 conductors to the shown dimensions here above
- Slide adaptor over conductor ①
- Slide insulator bush over conductor ①
- Put the core of the cable ① into the center contact (pin or socket) until it butts against the insulator bush
- Engage the assembly (cable + center contact) into the positioner of the crimping tool, and crimp center contact according to setting instructions page 8-24
- Engage the center contact into the body, with reasonable force push home. Check the dimensional position, following type of centre contact (pin/socket)
- Slide the adaptor on to the body up to the shoulder
- Place the core of the conductor ② into the straight slot, on the outer face of the adaptor
- Slide the ferrule over the adapter up to the shoulder of the body
- Engage the assembly into the positioner of the crimping tool, then crimp according to setting instructions, page 8-24

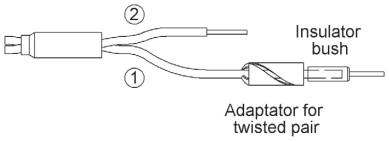

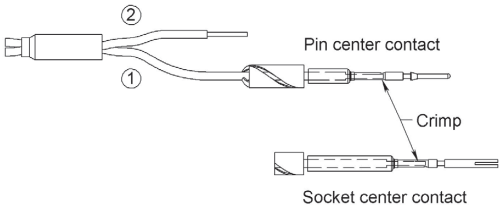

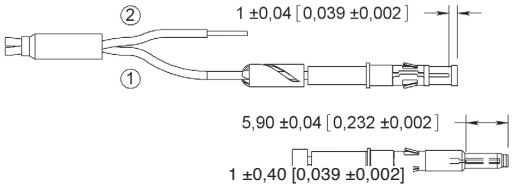

5,9 ±0,40 [0,232 ±0,002]

COAXIAL CONTACTS

CABLING INSTRUCTIONS C

CONTACT REF: 690020
690120

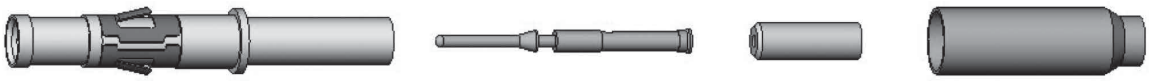

BODY CENTER CONTACT INSULATOR BUSH FERRULE

1-WIRE STRIPPING

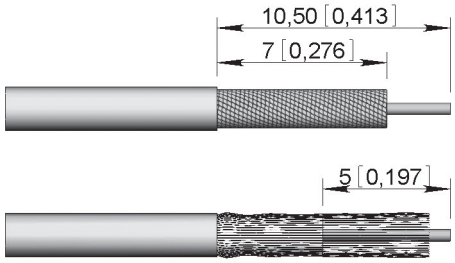

SOCKET CONTACT

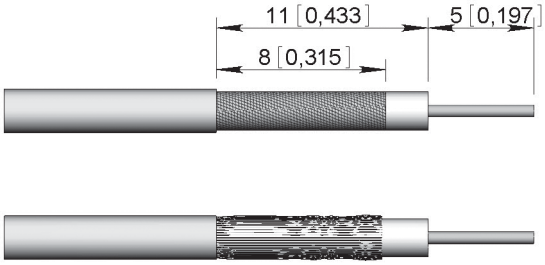

PIN CONTACT

2–WIRING INSTRUCTIONS

- Slide the ferrule over the coaxial cable
- Following the type of contact, strip the 2 conductors to dimensions shown above
- Comb the braid and slide on the insulator bush until it butts against the dielectric of the cable
- Place the core of the cable into the center contact so as to butt against the dielectric
- Engage the assembly into the positioner of the crimping tool and crimp according to instructions indicated on page 8-25
- Engage the centre contact into the body and with reasonable force push home, check the dimensional position of the centre contact (pin or socket)
- Pull down the braid over the body and slide the ferrule on to the body up to the shoulder
- Engage the assembly into the positioner of the crimping tool, then crimp according to instructions indicated on page 8-25

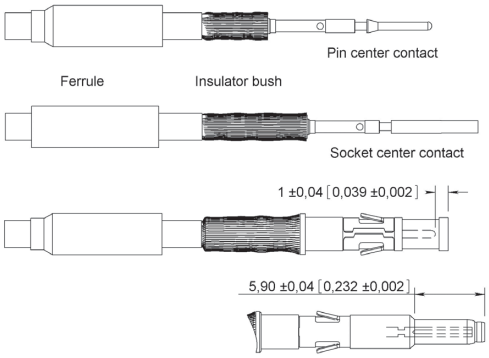

1 ±0,40 [0,039 ±0,002]

5,9 ±0,40 [0,232 ±0,002]

Contacts

COAXIAL CONTACTS

CABLING INSTRUCTIONS D

CONTACT REF: 690040 WIRE SIZES: AWG 24
690140

BODY

CENTER CONTACT

FERRULE

1-WIRE STRIPPING

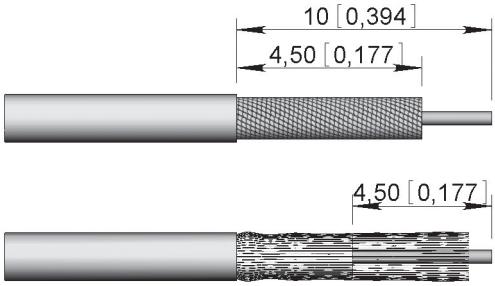

SOCKET CONTACT

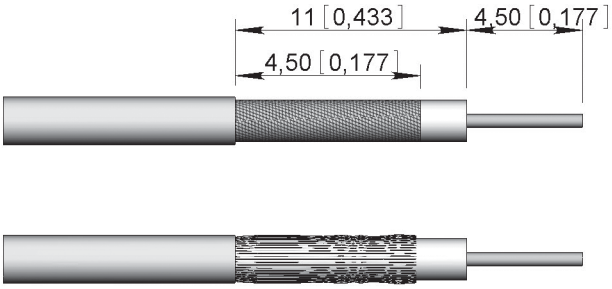

PIN CONTACT

2–WIRING INSTRUCTIONS

- Slide the ferrule over the coaxial cable
- Following the type of contact, strip the 2 conductors to dimensions shown above
- Place the core of the cable into the center contact so as to butt against the dielectric
- Engage the assembly into the positioner of the crimping tool, then crimp according to instructions indicated on page 8-25
- Engage the center contact into the body and with reasonable force push home, check the dimensional position of the center contact (pin or socket)
- Pull down the braid over the body and slide ferrule over braid up to the body shoulder
- Engage the assembly into the positioner of the crimping tool, then crimp according to instructions given on page 8-25

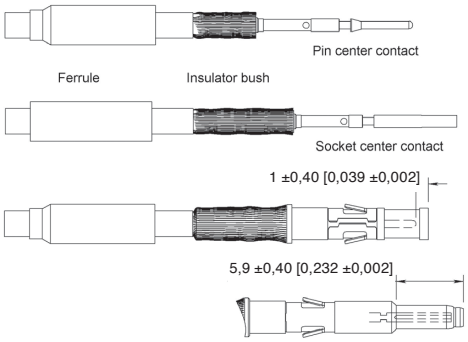

Contacts

TOOLS

CRIMP TOOLS

PART NUMBER	MIL SPEC P/N
282281	M22520/2-01
282291	M22520/1-01
282292	M22520/4-01

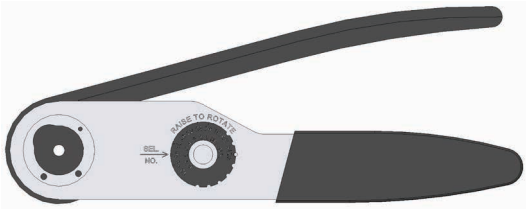

POSITIONERS

PART NUMBER	MIL SPEC P/N
282973	M22520/4-02
282976	Daniels TP616
282975	Daniles TP617
282981	M22520/2-04

INSERTION TOOL

PART NUMBER	MIL SPEC P/N
282502	-
282921	Wire Wrap

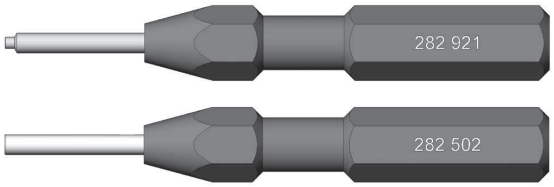

EXTRACTION TOOL

PART NUMBER
282501
282917
282920

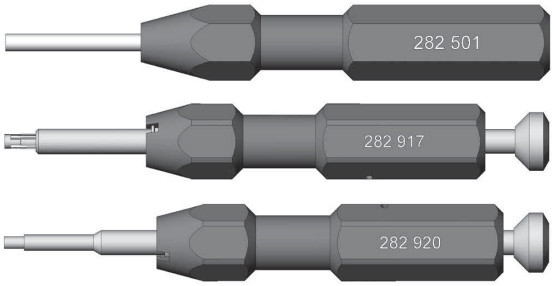

Notes