Scale 7 : 1

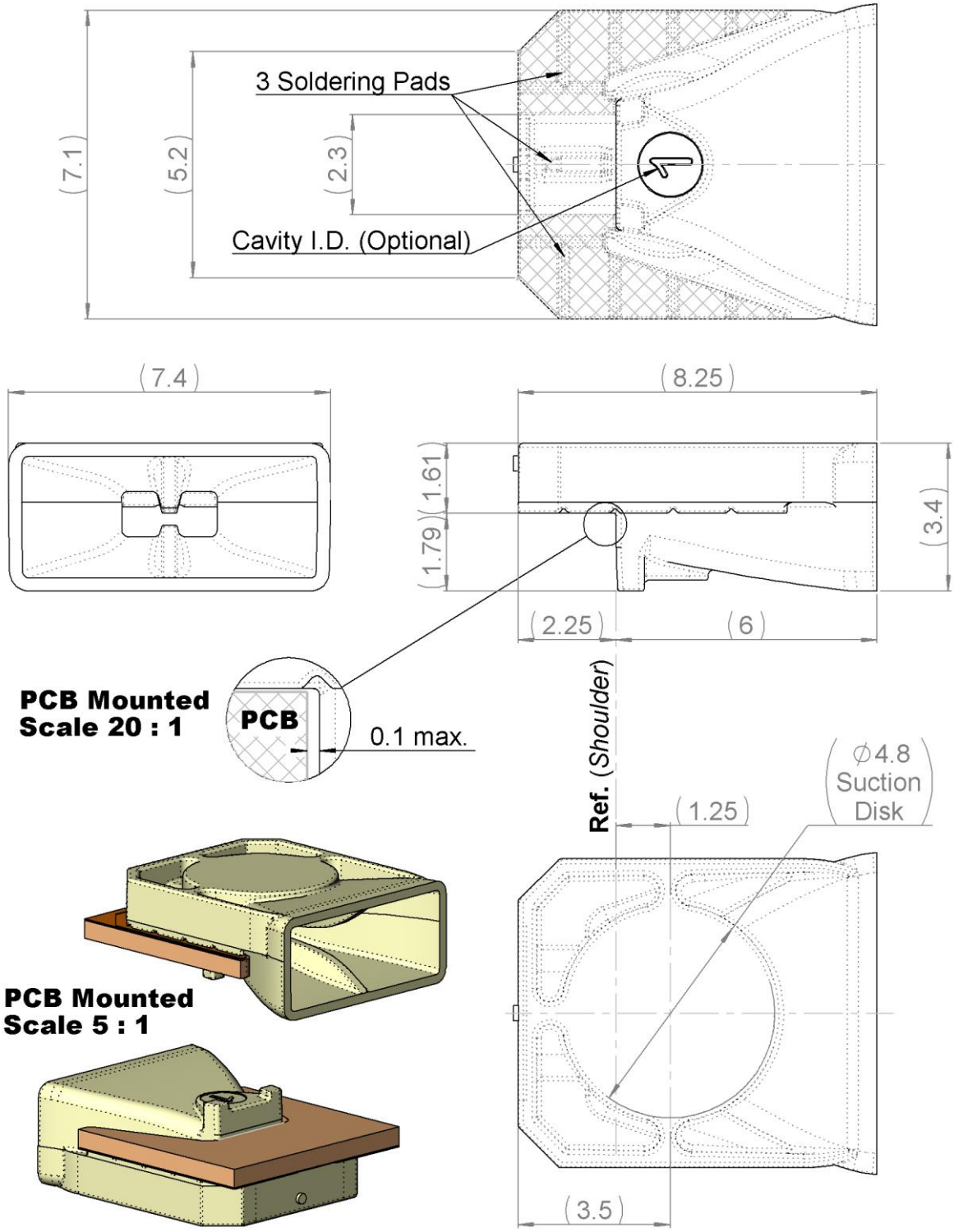

All dimensions are in mm. Tolerances according ISO 2768 m-H

Patented design.

COMPONENTS	MATERIALS	PLATING (µm)
Body	**LCP (*Liquid Cristal Polymer*)**	**Gold**

ELECTRICAL CHARACTERISTICS

Frequency Band	**57 ~ 66**	GHz
Nominal Impedance	**50**	Ω
Return Loss [1]	**< -10**	dB (Typ.)
Typical Far-Field Directivity	**> 8**	dBi
Radiation Pattern	**Directional**	(Horn)
Polarization	**Linear Vertical**	
Relative Cross-Polarization Level	**> 20**	dB
ESD Protection	**DC-Ground**	

(1): ***Measured on Reference Board (See Application Note "201910575-10_ _ _ - _ _ - _ _ B_AN.pdf").***

(2): ***Tape & Reel Packaging Conditions***

MECHANICAL CHARACTERISTICS

Weight	**0.12**	g ±15%
Overall Dimensions	**8.25 × 7.4 × 3.4**	mm
Mounting Type	**Edge-Card SMT**	

ENVIRONMENTAL CHARACTERISTICS

Extreme Storage Temperature [2]	**-20 / +55**	°C
Recommended Storage [2] (*12 Months Shelf Life*) [2]	**25 ± 15** **30 ~ 60**	°C %RH
Reflow Temperature	**260**	°C Max.
Operating Temperature Range	**-40 / +125**	°C
ROHS & REACH status	**See radiall.com/rohs**	

PACKAGING SUFFIX

	P/N Suffix	Packaging Type	OD	ID	Order Quantity
R380846102- _ _	**20**	**Large Reel**	**15''**	**4''**	**2000**
	01	**Small Reel**	**7''**	**2.4''**	**100**
	Other Packaging Available Upon Request				

PACKAGING REEL

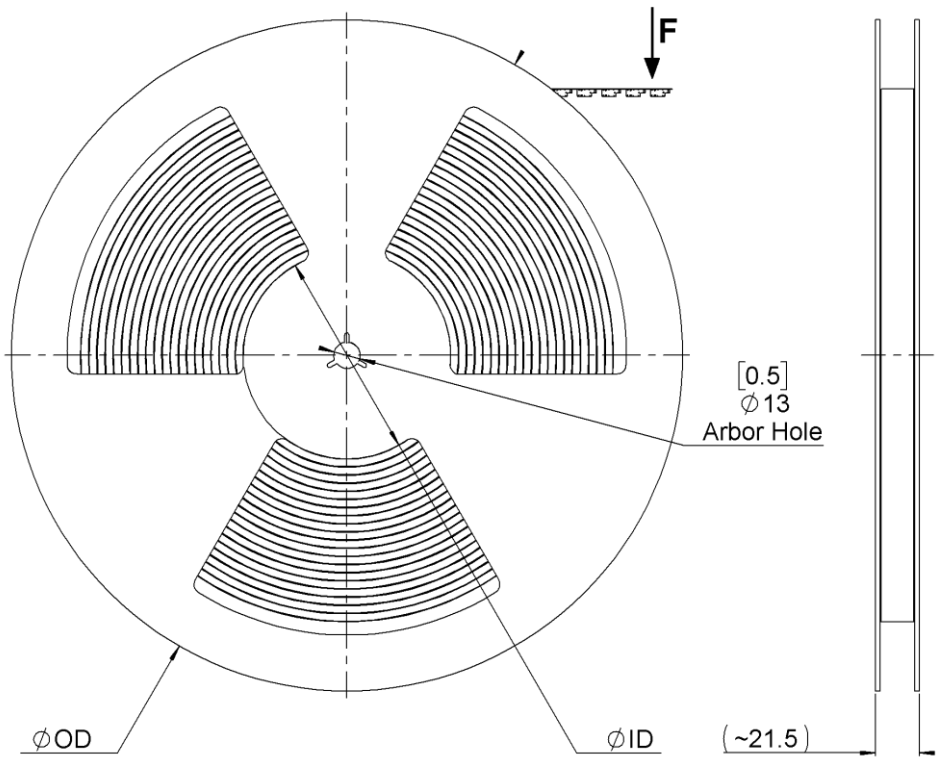

CARRIER TAPE

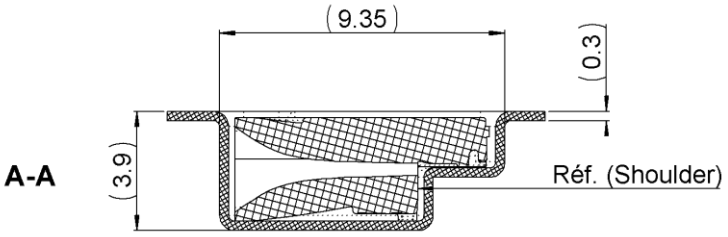

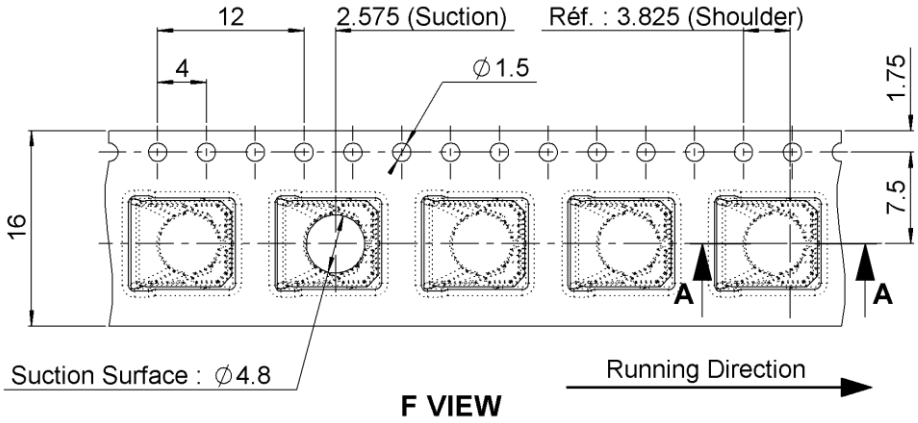

SHADOW FOR VIDEO CAMERA

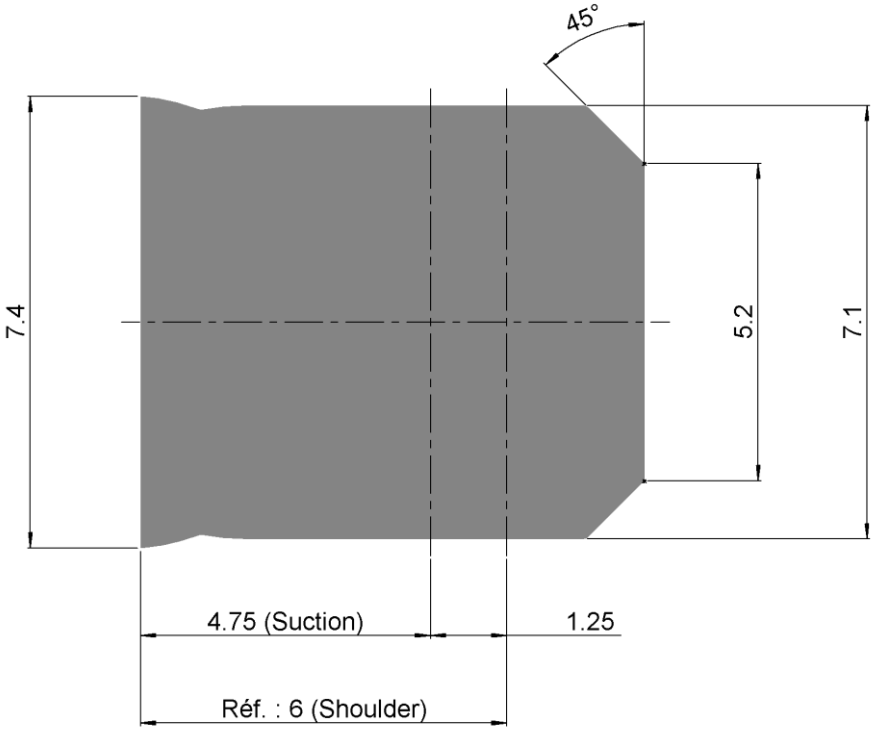

TYPICAL SOLDER MASK & PAD

: Solder Mask — **: Board Outline**

: Solder Pad — **: Footprint Limit** (*The PCB can expand beyond it*)

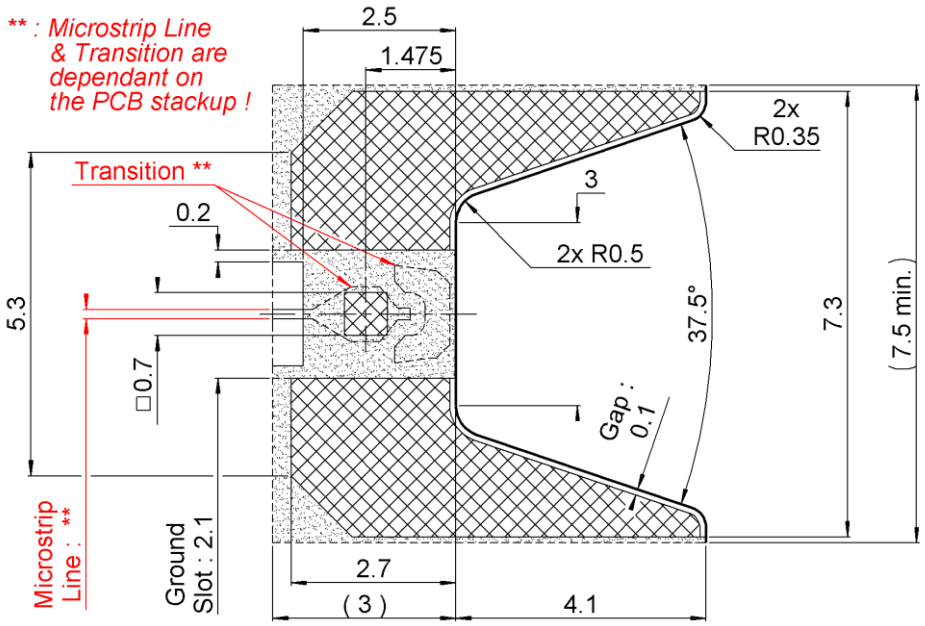

SOLDER PASTE (*For 80~100µ Thickness Screens*)

: Solder Paste — **: Board Outilne**

: Screen Limit — **: Footprint Limit** (*The PCB can expand beyond it*)

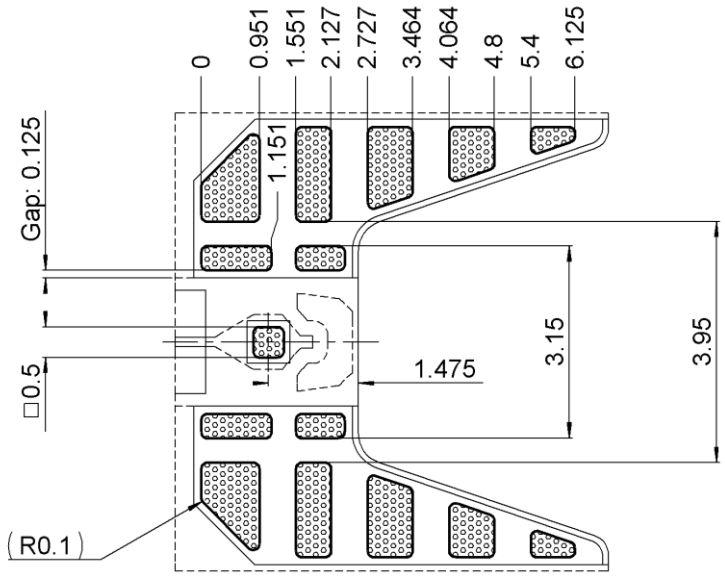

SOLDER PROCEDURE

1. Deposit solder paste 'SnAg4Cu0.5' (*T4 or T5*) on mounting zone by screen printing application. We recommend a low residue flux. We advise a thickness of 80 to 100 µm (*3,150 to 3,940 mils*). Verify that the edges of the zone are clean.
2. Placement of the receptacle on the mounting zone with an automatic machine of 'pick and place' type. A video camera is recommended for positioning of the component. Adhesive agents must not be used on the receptacle.
3. This process of soldering has been tested with convection oven .Below please find, the typical profile to use.
4. The cleaning of printed circuit boards is possible, but not mandatory.
5. Verification of solder joints and position of the component by visual inspection (*Component centered on pads, with 100µm max. gap between its shoulder & PCB edge*).

TEMPERATURE PROFILE

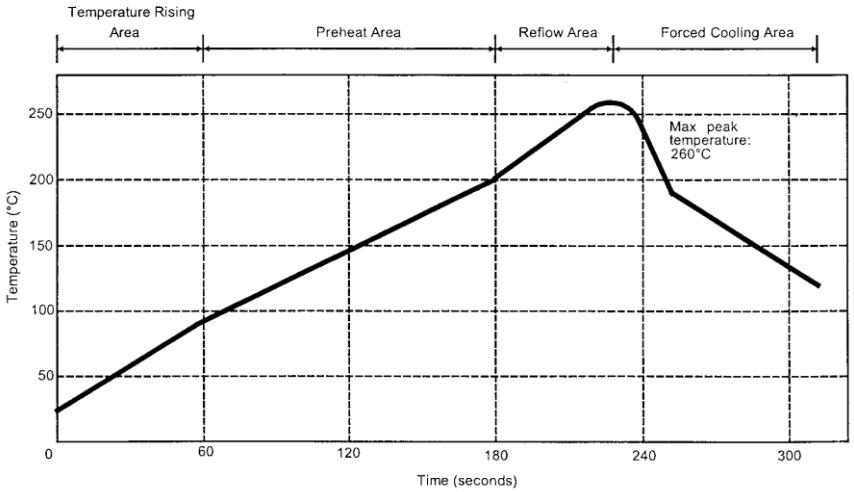

Parameter	Value	Unit
Temperature rising Area	1 - 4	°C/sec
Max Peak Temperature	260	°C
Max dwell time @260°C	10	sec
Min dwell time @235°C	20	sec
Max dwell time @235°C	60	sec
Temperature drop in cooling Area	-1 to - 4	°C/sec
Max dwell time above 100°C	420	sec